United States Patent

Nagin

[15] 3,689,091

[45] Sept. 5, 1972

[54] **SKATE FOR USE ON PLASTIC SKATING SURFACE**

[72] Inventor: **Harry S. Nagin,** Decker Apartments, 191 Presidential Blvd., Bala Cynwyd, Pa. 19004

[22] Filed: **Aug. 5, 1970**

[21] Appl. No.: **61,288**

[52] **U.S. Cl.** **280/11.12,** 301/5.7

[51] **Int. Cl.** **A63c 1/00**

[58] **Field of Search**.....280/7.13, 11.1, 11.19, 11.22, 280/11.27, 11.2, 11.12; 301/5.3, 5.7, 63 PW

[56] **References Cited**

UNITED STATES PATENTS

3,387,894	6/1968	Louik	301/63 PW
2,064,690	12/1936	Schavone	280/11.28
40,807	12/1863	Bailey	280/11.12
3,552,746	1/1971	Nagin	280/11.12 X

FOREIGN PATENTS OR APPLICATIONS

1,002,311	8/1965	Great Britain	301/5.3
857,866	1/1961	Great Britain	301/63 PW
190,067	9/1907	Germany	280/11.12
334,782	9/1930	Great Britain	280/7.13

Primary Examiner—Benjamin Hersh
Assistant Examiner—Milton L. Smith
Attorney—Parmelee, Utzler & Welsh

[57] **ABSTRACT**

A skate for use on a plastic skating surface has a rocker-shaped blade with wheels ahead of and to the rear of the central portion of the blade, the rollers having a resilient rim of such diameter that it is compressed under the weight of the skater, assuring that the blade glides on the skating surface when the skate is sliding in the direction of its length but prevents it from side slip. When the skate is tilted, the wheels provide thrust or braking friction as needed.

5 Claims, 6 Drawing Figures

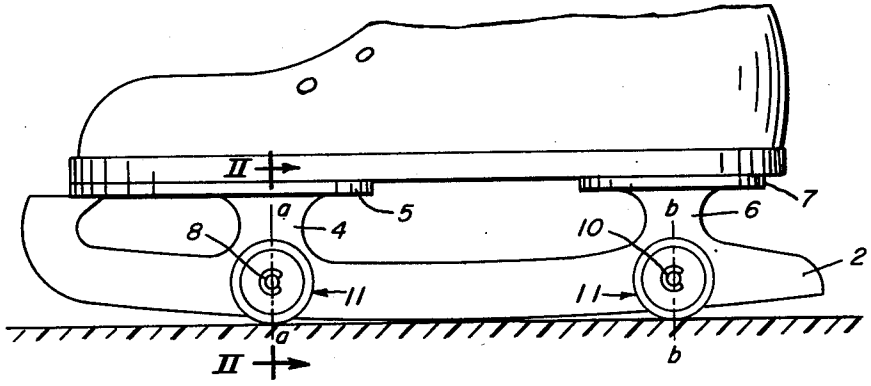

FIG. 1.

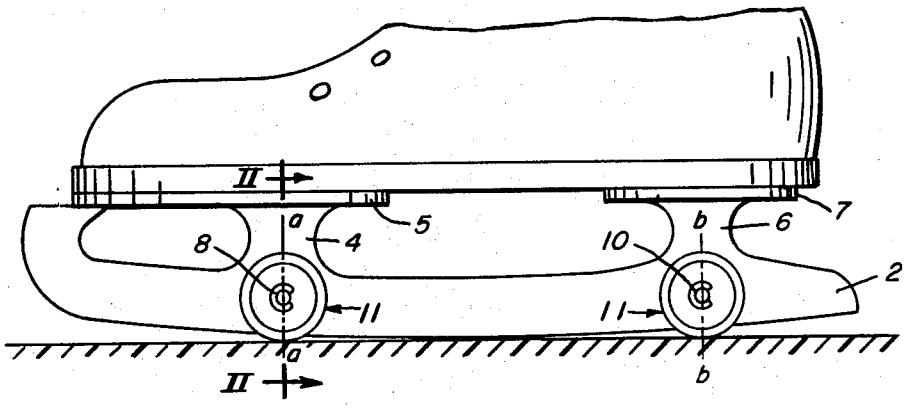

FIG. 2.

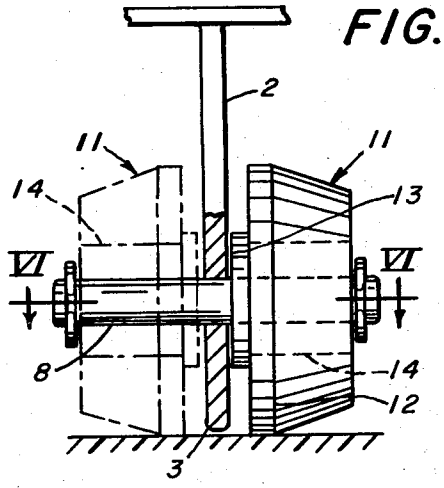

FIG. 6.

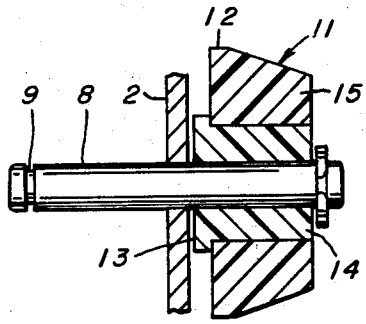

FIG. 3.

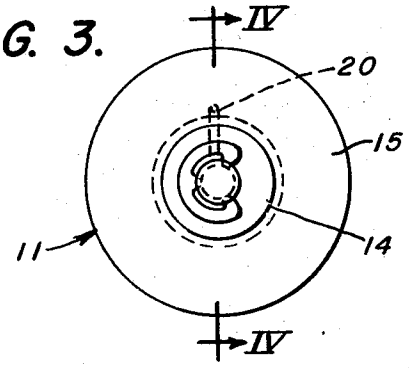

FIG. 4.

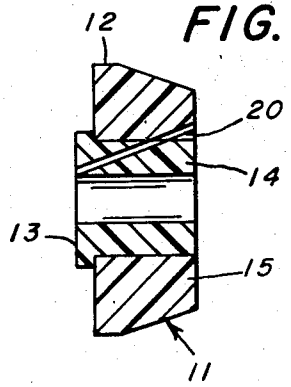

FIG. 5.

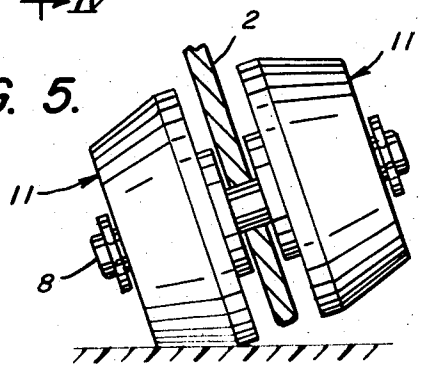

INVENTOR
HARRY S. NAGIN
By
Parmelee, Utzler & Welch
Attorneys

SKATE FOR USE ON PLASTIC SKATING SURFACE

This invention relates to a skate for use on a plastic skating or gliding surface and constitutes an improvement on the skate disclosed in my copending application Ser. No. 797,630, filed Feb. 7, 1969, now U.S. Pat. 3,552,746, issued Dec. 5, 1971.

In said application there is disclosed a skate having a blade with rollers thereon so arranged that they offered no appreciable resistance to the forward travel of the skate blade over the plastic skating surface, but when the skate is turned at an angle to the line of travel and tilted sideways to an angle, the anti-friction material forming the periphery of the skate, will be effective to provide a thrust or braking action.

While arrangements shown in said application were generally satisfactory, I have found that the improvements herein disclosed enable the skater to skate more freely and perform figures more easily due primarily to a better location of the rollers on the skate runner fore and aft of the central arc of the blade and in such relation as to be slightly compressed by the weight of the skater so as to be effective to prevent side-slip even when the skate is not tilted, as well as to improvements in the rollers or wheels themselves.

According to this invention the skate blade has the general configuration of a conventional "rocker" skate in which the blade has a runner which is generally quite gradually curved upwardly at the front and back from a central portion that is tangent to the planar surface over which the skate is gliding. According to this invention there are rollers or wheels forwardly of this central portion and rearwardly of said area of such diameter and so positioned that their edges extend to and even perhaps a small distance below said central area of the skate so that if the skate with no load on it were set on a planar surface the central area of the skate blade would be slightly off the surface and only the rollers or wheels would engage the flat surface. However, the wheel has its periphery formed of an elastomer and is generally of a truncated cone shape, so that only a narrow edge which deforms under the weight of the skater would normally contact the skating surface at any time except when the skate blade is tilted transversely to its length from a vertical plane.

The invention may be more fully understood by reference to the accompanying drawing of a preferred embodiment wherein:

FIG. 1 is a side elevation of the skate setting on a planar skating surface represented by the shaded line, but without the skater's weight to press it down;

FIG. 2 is a view partly in transverse section in the plane of line II—II of FIG. 1 and partly in elevation;

FIG. 3 is a front elevation on a larger scale than FIG. 1 of one of the wheels;

FIG. 4 is a transverse vertical section in the plane of line IV—IV of FIG. 3;

FIG. 5 is a view similar to FIG. 2 showing the skate blade tilted; and

FIG. 6 is a fragmentary horizontal section in the plane of line VI—VI of FIG. 2 with the cross pin shown in elevation and with one wheel removed and the other in section.

In the drawings, 2 designates a skate blade which is preferably made of stainless steel or chromium-plated stainless steel having a low coefficient of friction on a plastic skating surface such as that disclosed in my copending application. Instead of the skating edge being hollow ground, as with a conventional ice skate, it is rounded in transverse section as clearly shown at 3 in FIG. 2.

In side elevation the blade 2 is of familiar rocker shape having a central portion that normally slides on the skating surface, and each end portion curves upwardly away from the plane of the skating surface. Forward of the central runner portion there is the usual integral metal column 4 on which is a forward platform 5 for attaching the skate to a shoe, and rearwardly of the center portion there is the customary integral second column 6 with a rear plateform 7 that attaches to the heel portion of the skating shoe.

There is a metal pin or shaft 8 passing through the skate forwardly of the central portion of the runner, preferably being located in the blade about where the vertical center line *a—a* of the column 4 projected downwardly, passes through the blade. This shaft projects an equal distance to each side of the blade and near each end it has an annular groove 9 therein. There is a similar shaft 10 passing through and fixed in the blade on the projected center line *b—b* of the rear column 6.

On each end of each shaft there is a wheel or roller designated generally as 11. Each wheel is retained on its shaft by a C-key of a well-known type with three lugs that snap into the groove 9. While each wheel is generally in the shape of a truncated cone, in its preferred form it has a narrow cylindrical rim 12 at the base of the cone and from this rim it tapers like a truncated cone to the outer small diameter face of the wheel, which is the face most remote from the blade or skate runner. The inner face of the wheel has an integral washer-like project ion 13 thereon that confronts and bears against the skate blade.

The wheel is formed with a central core or hub member 14, the portion 13 being the inner end of this core. Cemented or otherwise immovably formed about the core and fitted thereto is a rim portion 15 which is desirably an elastomer that is injection-molded around the hub or core. The hub is preferably formed of nylon which turns freely on the metal pin 8 or 10 as the case may be, while the rim portion 15 is an elastomer having a high modulus of elasticity so that it will spring back to a true found after repeated deformation, and which at the same time has a relatively high coefficient of friction on a plastic skating surface. A material which has been found highly suitable for this purpose is a modified polyurethane of the type presently available under the designation Adiprene No. 167. It is prepared by combining 100 parts of the Adiprene with 19 ½ parts of a catalyst known commercially as Moca with the mixture being injection-molded and cured at about 100° C. for 1 hour.

A bonding medium I have found to be highly satisfactory for securing the elastomer to the nylon hub is available commercially from the Whitaker Company of West Alexander, Ohio under the trademark or trade designation Phixon XAB 936.

The diameter of the inner rim portion of each wheel is such that when the skate runner is setting level on a flat surface with the mid portion of the runner just touching the surface, the said wheel rims will project beyond the runner and contact the supporting surface.

In fact the wheels may even be and desirably are preferably large enough to hold the skate runner a very few thousandths of an inch above the level surface when the weight of the skater is not on the skate, the rim, however, being sufficiently resilient to allow the skate runner to slide on the skating surface when it yields under the weight of the skater. In either case the skate blade normally glides on the plastic surface and as long as the central area of the skate is gliding on the skating surface and the shafts **8** and **10** are substantially at right angles to the direction of glide, the rollers will desirably contact the skating surface, and not interfere with forward glide, but at all times prevent the skate from slipping sideways as it would otherwise be free to do, and thereby the rollers give the skater good control of his skates, and prevent uncontrolled spreading of his feet and legs. However, when the wearer turns the skate sideways or diagonal to the line of travel, the blade is naturally tilted from a vertical plane, pivoting on the edges of one or the other of the front and rear rollers, which, as shown in FIG. **5**, lifts the skate clear of the skating surface and all of the skater's weight is concentrated on the sloping periphery of the two wheels. At this time the peripheries of the two wheel son one side of the blade will be parallel with and contact the skating surface across their entire widths, securing maximum benefit of their high coefficient of friction of the wheel rim to provide thrust for forward travel or effective braking.

If in figure skating, the skater does a familiar movement where he in effect skates with one leg straight out ahead of him above the skating surface and the other leg bent at the hip, knee and ankle so that he rocks back, the trailing end of the blade and the two rear rollers act together. In other figures the foot is inclined forwardly and downwardly and the leading end of the blade and the front two rollers cooperate to give the skater control. In most forward glides either one pair or the pair of rollers or both pairs will usually function. On sharp turns the outside rollers of one skate and the inside rollers of the other may function with the skates being clear or substantially clear of the skating surface, but the frusto-conical treads of the rollers or wheel assist the skater inturning since they inherently roll toward the side of their smallest diameters.

Since the wheels are constantly subjected to side thrust against the runner of the skate, it is important that the core or hub of the wheel be not deformable and have a washer-like bearing surface **13** on its inner end to reduce the friction between the blade and the wheel. For this reason it is also desirable that the transverse shafts **8** and **10** be fixed in the skate runner to prevent any end play of the shafts. This may be done by brazing or other effective fixing processes.

Also, where the skates are being used for long periods of time, sufficient friction may develop between the portion **13** and the skate blade to effect heating to a detrimental extent so that a lubricant passage **20** may be formed diagonally from the outer face of the wheel down to the opening through which the axle or pin, **8** or **10**, as the case may be, passes, the passage opening at the axle near the inner face of the hub. Grease under pressure may be forced into this passage to gradually escape and lubricate the inner face **13** of the hub **14**.

As heretofore indicated, it is important that the outer portion of the wheel, while being resilient and a good friction material, also be one that will indefinitely, or at least for long periods of time, resist deformation, be tough and wear-resistant, and resist hardening or oxidizing. The hub may be metal or plastic, nylon being preferred because of its low coefficient of friction and strength. The wheels are sufficiently inexpensive that they can be replaced from time to time without appreciable maintenance cost.

The wheels could be thinner from one face to the other, but for strength as well as to provide good surface contact with the skating surface, relatively wide wheels as shown and described are preferred. Front and rear single wheels as disclosed in the aforesaid copending application could be used instead of a pair of wheels, but would require a more expensive skate and be less satisfactory. Best results have been obtained with a rocker skate having a blade with a central area of contact with the skating surface, and which curves gradually upward from the central area at each end, the central area being generally tangent to the skating surface, or at least more gradually curved that the end portions, and with the wheels on these up-curved portions, the wheels having a resilient periphery that projects far enough down to ride on and exert slight pressure against the skating surface in the manner hereinbefore described.

While I have shown and described a single skate, the skates are used in pairs, one on a left foot shoe and one on a right foot shoe.

I claim:

1. A skate for use on a plastic skating surface, the skate having:

a. a rocker type blade with a central skating area that normally contacts the skating surface and front and rear end portions that curve gradually upward from the central portion,

b. the skate blade having a wheel means on the blade on said upwardly-curving front and rear end portions, the wheel means having a resilient rim portion of a diameter such as to be slightly compressed when the central portion of the blade is on a flat surface and the skate is carrying the weight of the skater to thereby be effective to prevent side slip of the skate in forward gliding.

2. The skate of claim **1** in which said wheel means comprises a pair of wheels, one of which is at each side of the blade forwardly of said central area and a similar pair rearwardly of the central area.

3. The skate of claim **2** wherein each wheel is generally in the shape of a truncated cone with the base of the cone being at the side of the wheel nearest the skate blade.

4. The skate defined in claim **3** wherein the base of the truncated cone comprises a narrow cylindrical band of less width than the width of the cone portion of the wheel.

5. A skate comprising:

a. a blade with a runner portion adapted to glide on a plastic skating surface,

b. a pair of spaced axle members passing through the blades, with some of the runner portions between the axles, the axles having projecting portions at each side of the blade,

c. a wheel on each axle projection of generally truncated cone shape with the larger end of each wheel confronting the skate, the wheels having resilient rims,

d. the axles being so positioned and the wheels being of such diameter that the wheels will hold the runner clear of the skating surface when no pressure is on the skates, but the rim portions yield under the weight of a skater to bring the runners into contact with the skating surface, whereby the wheels hold the blades against side slip while the runners are gliding in the direction of their length.

* * * * *