Oct. 3, 1939. T. B. GIBBS 2,175,021

MICROPHONIC APPARATUS

Filed Feb. 8, 1937

Fig. 1

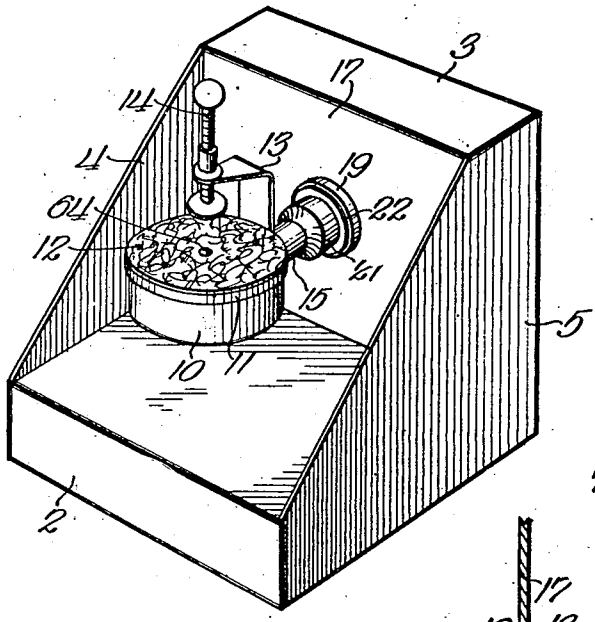

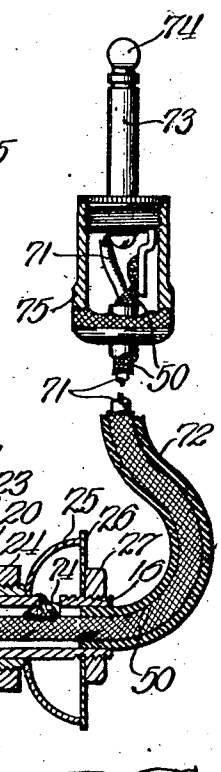

Fig. 2

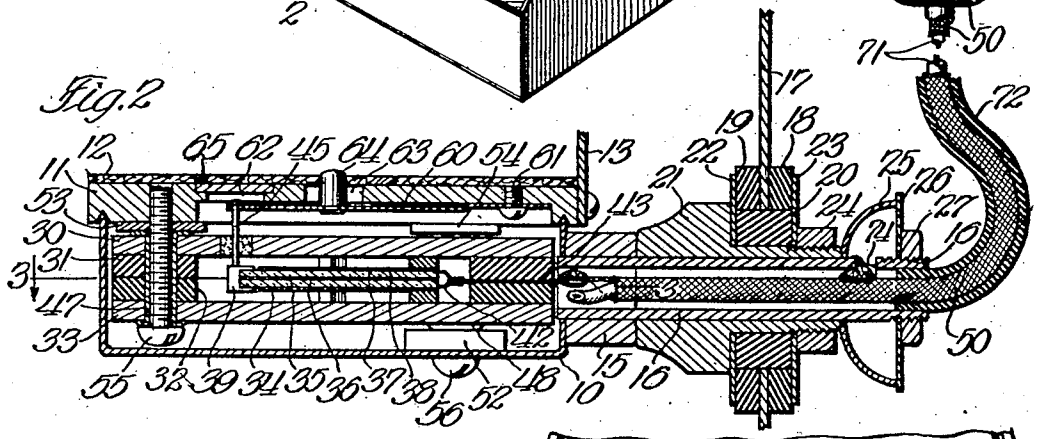

Fig. 3

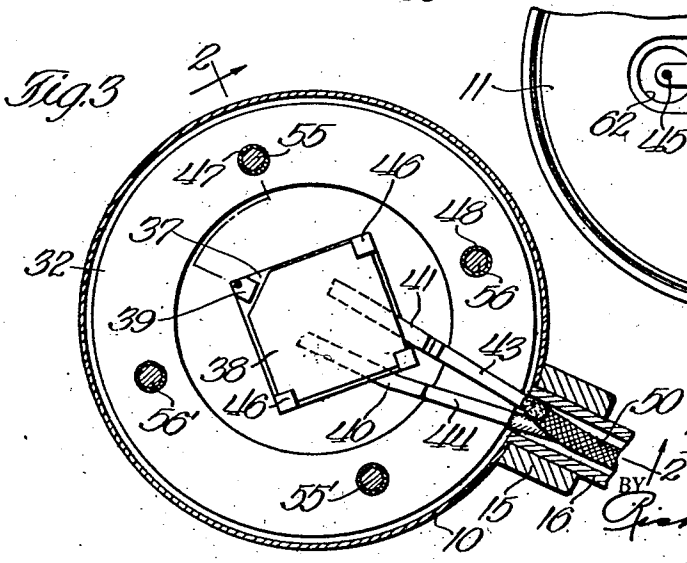

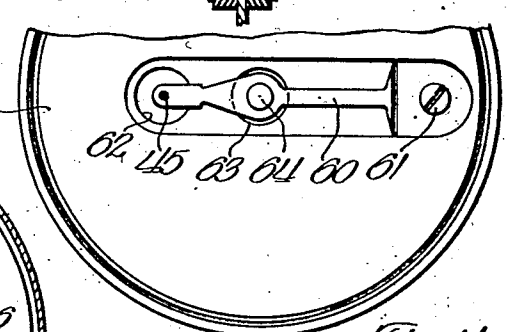

Fig. 4

INVENTOR
Thomas B. Gibbs
BY Richardson & Geier
ATTORNEYS

Patented Oct. 3, 1939 2,175,021

UNITED STATES PATENT OFFICE

2,175,021

MICROPHONIC APPARATUS

Thomas B. Gibbs, Chicago, Ill.

Application February 8, 1937, Serial No. 124,570

18 Claims. (Cl. 73—51)

My invention relates in general to microphones, and more in particular to a device of this character which is adapted for use in connection with watch timing apparatus for converting the mechanical vibrations produced by the ticking of a watch into electrical impulses. The objects of the invention are to produce a new and improved microphone which is suitable for the foregoing and similar purposes, and to provide necessary and desirable auxiliary arrangements whereby the microphone may be incorporated into a watch timing system.

The invention will be described hereinafter with reference to the accompanying drawing, in which—

Fig. 1 is a perspective view of the complete microphone and stand for mounting the same;

Fig. 2 is a section through the microphone and the means for supporting it on the stand, taken on the line 2—2, Fig. 3;

Fig. 3 is a section through the microphone taken on the line 3—3, Fig. 2; and

Fig. 4 is a view of the cover plate for the microphone casing taken from underneath.

Referring to the drawing, Fig. 1 shows a stand comprising a base 2, an upright rear portion or back 3, and the sides 4 and 5 with sloping front edges, as shown. The stand may be formed of sheet metal suitably embossed or otherwise finished to present a neat and attractive appearance. The arrangement of the stand is such as to form a partial enclosure within which the microphone is mounted against the back of the stand. The microphone is thus somewhat protected from accidental damages and at the same time is readily accessible.

As shown in Fig. 1, the microphone has a casing 10 for enclosing the parts and a cover plate 11. The latter has on its upper surface a layer of felt 12 on which a watch may be placed and held in position by suitable clamping means. This arrangement comprises a member 13 secured to the cover plate 11 by screws (see Fig. 2), and a clamping screw 14.

The means for supporting the microphone casing on the stand is partly shown in Fig. 1, but may be understood more clearly from Fig. 2. There is an opening in casing 10 on the right, as seen in Fig. 2, and surrounding this opening there is a cylindrical collar 15, suitably secured to the casing, as by soldering. This collar 15 affords means for rigidly attaching to the casing a tube 16 which enters the opening in the casing, and which serves as a conduit for the microphone connecting cord and also as a rotatable shaft by which the microphone is adjustably supported.

The upright rear portion 3 of the stand includes front and back walls spaced apart, and the front wall 17 has an opening therein to receive the tube or conduit 16. The tube 16 is rotatably secured to the wall 17 by an arrangement which will now be explained, reference being made especially to Fig. 2. Surrounding the opening in wall 17 are two rubber gaskets or washers 18 and 19, one on each side of the wall, and extending through these washers and the opening in the wall is a rubber bushing 20. There is also provided a sleeve member 21, having a head portion and a shank portion threaded at the end. The shank of the member 21 is positioned within the bushing 20, with the head against the bushing and the washer 19, there being, however, an interposed metal washer 22. A similar washer 23 is inserted under the nut 24, by means of which member 21 is held in place.

The tube 16 passes through a central longitudinal opening in the member 21 and is rotatable therein, suitable friction means being provided, however, to oppose rotation so that the microphone will remain in any position to which it is turned. This means comprises a cup-shaped washer 25, a flat resilient washer 26, and a nut 27. The latter is threaded on the end of the tube 16, after the washers are put in place. When the nut 27 is tightened, the collar 15 is drawn up against the head of member 21 and further tightening of the nut bends the resilient washer 26. The nut is adjusted so that the desired amount of friction is developed. The parts just described all lie in the compartment formed by the front and rear walls of the upright rear portion 3 of the stand. The rear wall (not shown) is preferably in the form of a removable cover plate, and may be provided with a suitable bushed opening through which the cord passes.

The so-called crystal which constitutes the operative element of the microphone comprises two square sheets or plates 35 and 37 of Rochelle salt, cemented together with a layer of foil 36 between them. There is also a layer of foil 34 on one side and a layer of foil 38 on the other. There is a thin strip of brass 40 assembled next to the foil 36, and underneath the foils 38 and 34 are assembled thin brass strips 41 and 42, respectively. The brass strips 41 and 42 are directly opposite one another, and their ends are brought together and are soldered to terminal strip 43. The strip 40 is soldered to terminal strip 44. At one corner of

the assembled crystal there is cemented a member 39, to which is attached a short pin or rod 45.

The crystal is contained in a sealed receptacle comprising metal plates 30 and 33 and rubber rings 31 and 32. The construction is clearly shown in Figs. 2 and 3. The crystal is supported by six rubber blocks, such as 46, three above and three below. The terminals 43 and 44 pass out between the rubber rings 31 and 32. The pin 45 extends outside the receptacle through an opening in plate 30, this opening being provided with a soft rubber bushing which surrounds pin 45. The receptacle with the crystal contained therein is subjected to compression after being assembled, and the plates 30 and 33 are then secured together by four tubular rivets, such as 47 and 48. Thus the terminal strips 43 and 44 are held tightly between rings 31 and 32, and the crystal is supported at three corners by the blocks 46, which are compressed between plates 30 and 33.

The unit is securely held to the cover plate 11 by two screws 55 and 55', spaced 180° apart. These screws are shown in section in Fig. 3, and screw 55 appears in Fig. 2. The screws pass through two of the tubular rivets, such as 47, and are threaded into the cover plate. Washers, such as 53, are provided to space the unit slightly away from the cover plate.

As shown in Figs. 2 and 4, there is a recess cut in the lower side of the cover plate 11, in which is positioned a light spring member 60. This spring is secured at one end to the cover plate 11 by means of screw 61. When the cover plate and crystal unit are assembled, as described in the preceding paragraph, the pin 45 passes through a small hole in the end of spring 60. The cover plate 11 is provided with an opening 62 just above the end of spring 60, which is large enough to enable pin 45 to be secured to the end of the spring by soldering. After this is done, the opening is closed by a small metal disc 65. The layer of felt 12, of course, is not put in place until after the other parts are assembled. It may be attached with glue or shellac. The actuating pin 64 is attached to spring 60 and extends up through an opening 63 in the cover plate 11 and through a hole in the felt 12. The top of the pin 64 may be just slightly higher than the upper surface of the felt.

The manner in which the cover plate and crystal unit are assembled in the casing 10 may now be explained. Assuming the latter has already been mounted on the stand, the cord may be pulled through the tube 16 far enough so that it can easily be attached to the terminals 43 and 44. As shown herein, the cord comprises an insulated conductor 71, surrounded by a woven metal sheathing 50, over which may be a layer of rubber insulation 72. The conductor 71 is soldered to the terminal 44, and the metal sheathing 50 is soldered to the terminal 43. The rubber insulation 72 may first be removed for several inches so as to expose the sheath 50.

After the cord has been attached, it may be pulled back, while the assembled crystal unit and cover plate are placed in position, with the rim of the casing entering the groove in the lower surface of the cover plate. The assembly is held in the casing by two screws 56 and 56' shown in section in Fig. 3, from which the position of these screws relative to each other and to screws 55 and 55' can be understood. The screws 56 and 56' of course pass through the two tubular rivets, such as 48, which are displaced 90°, respectively, from those occupied by screws 55 and 55'. By referring to Fig. 2, it will be seen that screw 56 passes through the bottom of the casing 10, through a washer 52, then through the tubular rivet 48 and a washer 54, and into the cover plate 11, which is provided with a threaded opening to receive it. Screw 56' is just opposite screw 56, and the two serve to hold the casing and cover plate firmly together.

The sheath 50 of the cord is preferably grounded to the casing, which may conveniently be accomplished by soldering it to the tube 16. There is an opening 74 in tube 16, which lies between the washer 25 and the washer 26, and which is fully exposed by the temporary removal of these washers and nut 27. The sheath 50 can thus be firmly soldered to the tube 16, after which the washers and nut are replaced. The soldered connection not only serves to conductively connect the tube and casing with the metal sheath of the cord, but it also serves to hold the latter in place in the tube 16 and eliminates any danger of breaking the terminal connections.

For convenience in connecting up the microphone, the cord is preferably terminated in a plug, which may be of the type shown in the drawing. This plug comprises a sleeve member 73, a tip member 74', and a thimble 75. The latter, although frequently made of insulating material, should in this case be of metal. The conductor 71 is connected to the tip of the plug, and the sheath 50 is soldered to the sleeve, all as clearly shown. It will be noted that the construction shown provides for a complete shielding of one side of the microphone circuit, from central foil 36 of the crystal element to the extreme tip of the plug.

The operation of the device may now be described. For this purpose it will be assumed that the microphone is connected by means of the cord and plug to an amplifier, which may form part of a watch timing apparatus.

A watch may now be placed on the microphone, resting on the felt 12, and the clamping screw 14 may be turned down enough to hold the watch in position. The lower side of the watch case presses on the end of pin 64, which is depressed a little, and spring 60 is slightly tensioned.

Assuming that the watch is running, at each tick a slight mechanical shock will be transmitted through the case to the pin 64, and by way of spring 60 and pin 45 to the free corner of the crystal, causing a momentary bending of the crystal. The two sheets of Rochelle salt of which the crystal is composed are so cut from the original crystal and are so related to each other in the assembly that a movement of the free corner in a direction perpendicular to the crystal faces, such as is produced by the shock of the watch tick, will generate a voltage between the inner foil 36 and the outer foils 34 and 38. This voltage is transmitted through terminals 43 and 44 and through the cord and plug to the amplifier.

The watch may be tested in various positions, as is generally required. For instance, it will be clear enough that the watch can be placed on the microphone with the face up or with the face down, and in either position can be rotated around a perpendicular axis passing through the clamping screw 14. In order to test the watch in an upright position, as it is carried in the pocket, the microphone is rotated 90° in either direction, the clamping screw 14 having been tightened up enough to prevent the watch from slipping off. When the microphone is rotated, the tube or shaft 16 turns in the sleeve member

21 and remains in the position to which it is adjusted because of the frictional means including the resilient washer 26.

The impulses generated by the crystal are of uniform amplitude regardless of the position of the microphone, and are not mixed with interfering impulses, such as might be generated by extraneous vibrations, mechanical, acoustical, or electro-magnetic. This is a result which has not been attained heretofore, in so far as the applicant is aware. Previous microphones for use in watch timing systems have been of the carbon granule type, as shown, for example, in the Norrman Patent No. 2,058,616, granted October 27, 1936, and have not been entirely successful. Such microphones do not give a uniform output because they are subject to the phenomena known as packing, and because of the positional effects. The first characteristic is apt to stop the operation of the system at any time, and the latter makes it necessary to frequently adjust the amplifier. The attempts that have been made heretofore to eliminate the effects of unwanted extraneous vibrations have not been successful either, because they have not taken into consideration the effect of acoustical vibrations and electro-magnetic waves, and have left the microphone fully exposed to such influences.

The improved microphone disclosed herein has none of the defects mentioned above. The crystal element, of course, has no carbon granules to become packed, and it is absolutely non-positional; that is, it operates precisely the same regardless of the position of the microphone. The arrangement for mounting the microphone gives a double protection against mechanical shocks or jars, which will be evident from the fact that the entire microphone is resiliently mounted on the stand, while the crystal element is also resiliently mounted within the microphone casing. As regards noise interference, it may be pointed out that interference from sound waves in the air is avoided by the enclosure of the crystal element in a sealed receptacle, and by the substantial enclosure of all the operative elements, such as the spring 60 which is inside the casing. In fact, the only part to any extent exposed is the end of the actuating pin 64, and that is covered by the watch when the microphone is in use. Finally, it will be observed that extreme care has been taken to shield the apparatus from interference by electro-magnetic or radio waves. All metal parts of the casing and its mounting, the two outside terminals of the crystal, the actuating means for the crystal, and even the watch being tested, are conductively connected together and to the sheath 50. These metal parts and the sheath form a complete and continuous shielding for the live side of the microphone circuit comprising foil 36, terminal 44, and conductor 71, all the way to the tip of the plug. At the amplifier, the jack provided for receiving the plug is preferably shielded also and should be provided with a shielded conductor leading from the tip spring of the jack to the first amplifier tube. Thus, when the microphone plug is inserted in the jack at the amplifier, the circuit including conductor 71 will be extended through to the grid of the tube without any exposure whatever. The shielding at the amplifier is, of course, connected to the sleeve of the jack and is grounded, as is also the cathode, so that the other side of the microphone is connected to the cathode of the first tube over the shielding and ground.

In practice it is sometimes convenient to dispense with the soldered connection between the crystal terminal and the sheath 50, which can be done by bending terminal 43 down and clamping it between the lower plate 33 and the adjacent ring when the unit is assembled. This will effectively ground terminal 43 on the casing, which is connected to the sheath 50 through the mounting and the soldered connection at 74. The arrangement shown is generally desirable, however, as it makes it possible to use a cord such as is shown, or a cord which has two insulated conductors enclosed in a grounded sheath, which it might be necessary to use in certain situations.

Other modifications are possible, and I do not therefore wish to be limited to the precise embodiment shown and described herein, but desire to include and have protected by Letters Patent all forms and modifications of my invention which come within the scope of the appended claims.

I claim:

1. In combination, a stand forming a partial enclosure and including an upright wall, a microphone, means for supporting said microphone within the enclosure and against the said wall, said means providing for rotation of the microphone relative to said enclosure and about an axis perpendicular to said wall, and means for clamping a watch to said microphone.

2. In combination, a stand including a base and a supporting member for a microphone, a microphone and casing therefor, a tubular shaft secured to said casing, a bearing member in which said shaft is rotatable, means for resiliently securing said bearing member to said supporting member, and a cord for the microphone extending through said shaft.

3. In combination, a stand, a microphone casing, means for resiliently mounting said casing on said stand, a sealed receptacle, means for mounting said receptacle in said casing, a crystal microphone element, means for resiliently mounting said element inside said receptacle, and means independent of the stand, casing and receptacle for transmitting mechanical vibrations from outside the casing to said crystal element.

4. In combination, a casing including a support for a watch, a piezo electric crystal supported within said casing, an actuator pin extending through an opening in said support so as to be contacted by a watch resting thereon, and a mechanical coupling between said crystal and said pin.

5. In combination, a casing, a piezo electric crystal mounted in said casing, a cover for said casing, a spring secured at one end to the under surface of said cover, a link connecting the other end of said spring to said crystal, a pin connected to said spring and extending upward through an opening in said cover so that the end thereof may be engaged by a watch resting on the cover.

6. In combination, a casing and cover therefor, a piezo electric crystal mounted in said casing, an actuating pin extending through the cover from inside the casing, means for clamping a watch to said cover with the case resting against the end of said pin and depressing the same, and a resilient mechanical coupling between said pin and crystal which is operatively tensioned by depression of the pin to thereafter transmit the shocks of the watch ticks from the watch case to the crystal.

7. In combination, a casing, a piezo electric crystal mounted in said casing, a cover for said

casing having a resilient pad on its upper surface to support a watch, an actuating pin extending from the inside of the casing through said cover and pad and adapted to be engaged by the case of a watch resting on the pad, and a mechanical coupling between said pin and said crystal.

8. In combination, a support for a watch, a piezo electrical crystal, an actuating pin extending up through said support and adapted to be depressed by a watch resting thereon, and spring coupling means between said pin and crystal which is operatively tensioned by depression of said pin.

9. Apparatus for converting the mechanical shocks produced by the ticking of a watch into electrical impulses, comprising a piezo electric crystal, mechanical coupling means for transmitting vibrations from a watch case to said crystal, supporting means including means for preventing the said crystal and coupling means from being influenced by extraneous shocks, and means for preventing said crystal and coupling means from being influenced by acoustical vibrations transmitted through the air.

10. Apparatus for converting the mechanical shocks produced by the ticking of a watch into electrical impulses, comprising a microphone, mechanical coupling means for transmitting tick impulses from a watch case to said microphone, and a casing entirely surrounding said microphone and coupling means to shield the same from the impact of sound waves in the air, with the exception of a small portion of said coupling means which is in contact with a watch case and is completely shielded thereby when the apparatus is in use.

11. Apparatus for converting the mechanical shocks produced by the ticking of a watch into electrical impulses and for conducting said impulses to an amplifier, comprising a microphone, a metallic casing surrounding said microphone, mechanical coupling means for transmitting vibrations from a watch case outside the casing to said microphone, said coupling means being conductively connected to said casing, mounting means for said casing including a metallic conduit conductively connected thereto, a conductor extending from the microphone through said conduit and beyond the end thereof, a metallic shield surrounding the conductor outside the conduit and extending also inside the conduit, and a conductive connection between said shield and conduit.

12. In a microphone pickup device, a microphone element having two terminals, a plug, a flexible conductor extending from one terminal of said microphone to a conductor of said plug, means including a casing for said microphone element, a metallic sheath surrounding said flexible conductor and including the sleeve of said plug for completely shielding the microphone to plug circuit from electro-magnetic waves, a connection between the other terminal of said microphone and the shielding, and means for transmitting mechanical vibrations from outside the casing to said microphone.

13. In combination, a crystal microphone element, a receptacle enclosing said element, an outside casing enclosing said receptacle, means for resiliently mounting said element in said receptacle and said receptacle in said casing, means for supporting a watch on said casing, and means for transmitting vibrations from the watch case to said element, said last means comprising a part extending through the wall of the casing into engagement with the watch case, another part extending through the wall of said receptacle and secured to said element, and means for coupling said parts together located between the receptacle and the said casing.

14. In combination, a crystal microphone element, means comprising a casing for completely shielding said element from acoustical vibrations transmitted through the air, means for resiliently supporting said element in said casing, means for securing a watch to said casing, and yielding coupling means wholy shielded from air vibrations by the watch and casing for transmitting mechanical vibrations from the watch case to said element.

15. In combination, a crystal microphone element, a metallic casing surrounding said element and in which said element is supported, coupling means located inside said casing but including a part projecting through the wall thereof to engage a watch supported on said casing, and circuit means for grounding said casing, said coupling means including the part in contact with the watch being of metal and being connected to the casing, whereby said coupling means and said watch are also grounded.

16. In combination, a casing, a piezo-electric crystal supported within said casing, a support for a watch, means for temporarily securing a watch to said support, bearing means in which the support is mounted for rotation to enable the watch secured thereto to be moved to different positions, an actuator pin extending through an opening in said support so as to be contacted by said watch, and a mechanical coupling between said crystal and said pin.

17. In combination, a casing, a piezo-electric crystal supported in said casing, a support for a watch, means for temporarily securing a watch to said support, resilient means interposed between said watch and support, an actuator pin extending through an opening in said support so as to be contacted by the said watch, and a mechanical coupling between said crystal and said pin.

18. A microphone pick-up device for use in watch testing, comprising a microphone element having two terminals, a plug, a flexible conductor extending from one terminal of said microphone to a conductor of said plug, means for completely shielding the microphone to plug circuit from extraneous electrical influences, said means comprising a casing for said microphone, the sleeve of said plug, and a metallic sheath surrounding said flexible conductor, a connection between the other terminal of said microphone and the shieldng, means for supportng a watch outside said casing, and means for transmitting mechanical vibrations from said watch to said microphone.

THOMAS B. GIBBS.