Sept. 29, 1931. B. F. FOSS 1,824,881

MAIL RECEIVING DEVICE FOR DOORS

Filed May 31, 1930

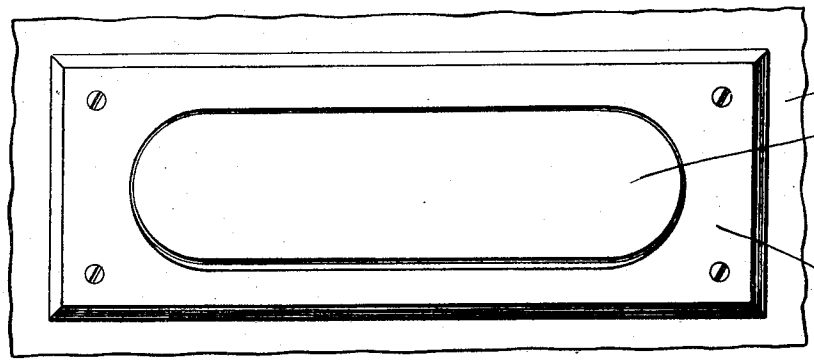

Fig. 1

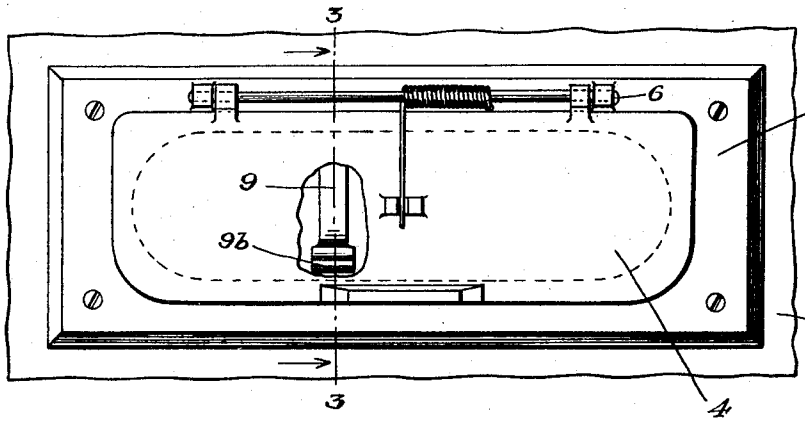

Fig. 2

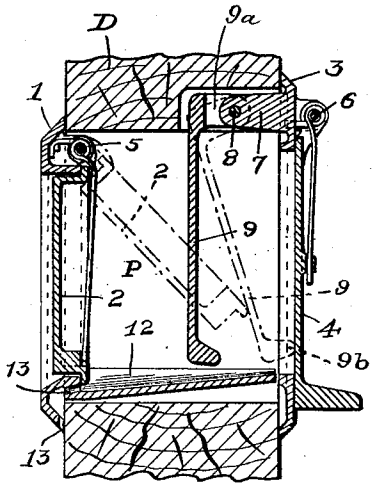

Fig. 3

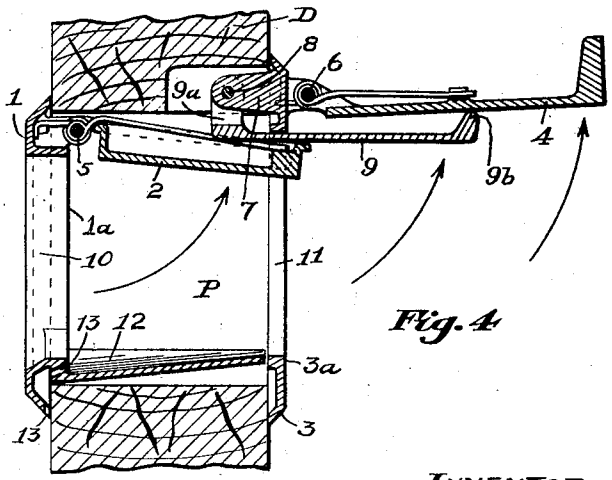

Fig. 4

INVENTOR.

Benjamin F. Foss.

BY Henry L. Chenery.

ATTORNEY.

Patented Sept. 29, 1931 1,824,881

UNITED STATES PATENT OFFICE

BENJAMIN F. FOSS, OF PORTLAND, MAINE

MAIL-RECEIVING DEVICE FOR DOORS

Application filed May 31, 1930. Serial No. 457,876.

The invention hereinafter to be described relates to mail-receiving devices for house doors and embodies in its structure certain improvements in the invention for which I filed an application for U. S. patent of date February 28th, 1929, Ser. No. 343,471.

The primary object of the present invention is to provide facilities whereby, through the actuation of the outer cover, the inner cover of the apparatus may be sufficiently opened to permit of unobstructed passage of mail matter through the opening in the door, particularly when the device is mounted on an extra thick door and the mail matter is somewhat bulky in character.

In my former invention one of the covers contacts with and operates directly on the other cover to open it—an arrangement which when applied to thin doors gives satisfactory service.

But on thick doors the front cover is not sufficiently wide to actuate the rear cover, so for this type of door I employ an element pivotally suspended intermediate the two covers in such a manner that what amounts to an extension of the front cover is provided which projects outwardly when engaged by the front cover and contacting with the rear cover raises it so as to provide ample space to admit the mail matter without interference.

The sliding contact of the interposed element with the covers lengthens the possible travel or arc of movement of the inner cover beyond what would be possible were the moving parts positively connected and, furthermore, greatly simplifies the whole structure.

The character of the invention may best be understood by reference to the description found in the following specification when taken in connection with the accompanying drawings in which—

Fig. 1 is a front elevation of the device, showing the outer cover;

Fig. 2 is a rear elevation of the same, showing the inner cover;

Fig. 3 is a transverse sectional elevation of the device, the section being taken on line 3—3, Fig. 2. The covers are shown in "closed" positions in this view; and

Fig. 4 is the same as Fig. 3 except that the covers are shown in "open" positions.

Similar reference characters are employed to identify like parts in all the views of the drawing.

Referring to the drawings, D represents a portion of a door rail equipped with my improved mail-box door plate combination.

On the front or outer side of the door is a skeleton door-plate 1 provided with a cover 2 which seats, when the passage-way P for mail is closed, on the ledge 1*a* of the plate. On the rearward or inner side of the door is another plate, 3, having a cover 4 adapted to seat on its inner face 3*a*. These covers, 2 and 4, are hinged on pins 5 and 6 supported in lugs projecting from the plates 1 and 3, respectively.

The foregoing elements are constructed substantially like the corresponding elements in my previous invention hereinbefore referred to, except in certain particulars which I will presently disclose.

By examination of Fig. 3 it will be observed that a lug 7 projects inwardly from the door plate 3, and that pivoted on the pin 8 in this lug is an offset arm 9, the pivotal point being in the offset portion 9*a*.

When the covers 2 and 4 are on their seats, closing, respectively, the openings 10 and 11 through the door-plates 1 and 3, the arm 9 depends into the space intermediate the two covers, but when it is required to pass mail matter through the apparatus the cover 2 is manually swung inwardly into engagement with the arm, and upon continuing the inward movement of the cover 2 the arm will be brought into contact with the cover 4—the position of the parts at this point in the operation of the device being shown in dot and dash lines, Fig. 3.

Upon still further movement of the plate 2 the parts will be disposed as seen in Fig. 4, the cover 4 being raised to a substantially horizontal position.

It is obvious that by varying the length or extent of projection of the foot 9*b* on the arm 9 the elevation to which the cover 4 may be raised can be varied. And by correspondingly changing the length of the lug 7 the

apparatus is applicable in a great variety of widths of doors.

It will be observed by reference to Figs. 3 and 4 that, after the cover 2 and arm 9 are brought into their respective positions as shown in dot and dash lines in Fig. 3, and the parts continue on their movements to open the passage-way P, a progressively increasing speed in the movement of the cover 4 is procured. This is due to the gradual decrease in the leverage action, or in other words, to the shortening of the distance between the pivotal point of the cover, at 6, and the point of contact of the foot 9*a* with the inner face of the cover 4.

So that, although the cover 2 has completed a considerable portion of its maximum swinging movement before the cover 4 has even started from its seat, the inner cover gains in its speed of travel to such an extent that both covers finally reach their extreme upward movement with each in substantially a horizontal position.

This leaves a full and clear passage-way through the door with no impediment to the delivery of mail matter to the interior of the house.

The advantage of supplying two covers, an inner and an outer, has been previously set forth in my former application. Especially in the case of thick doors and more particularly with large door-plates which I construct of a size in accordance with postal rules and regulations, the inner or rear cover greatly assists in maintaining a weather proof mail box device.

Although I provide yielding means to normally hold the covers on their seats, their face areas are so large that, in the case of the outer one, the force of the wind has a tendency to slightly jar it open or away from its seat. However the "dead" air space between the covers acts to prevent the passage of rain or even air through the rear opening 11 and should a very small amount of water pass the outer cover it will lodge in the catch basin 12 and pass outwardly through the drains 13.

The embodiment herein described and illustrated in the accompanying drawings is preferred construction; but it is to be understood that various changes in the form, proportion and minor details of construction, within the scope of the claims, may be resorted to without departing from the spirit or sacrificing any of the advantages of the invention.

What I claim is:

1. In apparatus of the class described comprising in combination with an outer and an inner door-plate and two covers hingedly connected, respectively to said door-plates, an arm pivotally suspended between said door-plates, a foot on the lower end of said arm adapted to engage said inner cover when said arm is swung theretoward, said arm being so disposed in the apparatus as to lie normally in the path of movement of said outer cover and to be engaged thereby during a portion only of the swinging movement of said outer cover, said inner cover being raised by the co-acting movements of said outer cover and said arm.

2. In apparatus of the class described comprising in combination with a door having a mail-receiving opening therethrough, a door-plate secured on the front and on the rear sides of said door, each of said plates having an opening in alignment with the opening through said door, a cover on each of said door-plates hingedly connected thereto to swing rearwardly, relative to said door, and means disposed in the space interjacent said covers but non-attached thereto, whereby said inner cover may be raised from its closed to its full open position during the time occupied by said outer cover in completing but a portion of its full swinging movement, said outer cover co-acting with said means to effect the raising of said inner cover.

3. In apparatus of the class described adaptable for use in connection with mail-receiving devices for doors having a mail-receiving opening therethrough, comprising in combination an outer and an inner door-plate each thereof having an opening in alignment with the opening through said door, a cover pivotally secured on each of said door-plates and adapted, normally to seal the space between said covers, a lug projecting inwardly from and located at the top of said inner door-plate, an arm, having an offset upper end, depending from a pivotal connection with said lug, said arm being disposed within the space between said covers and operable in the path of movement of said outer cover, and a foot on the lower end of said arm adaptable, when said arm is swung theretoward, of slidable engagement with said inner cover.

In testimony whereof I affix my signature.

BENJAMIN F. FOSS.