No. 801,407. PATENTED OCT. 10, 1905.

F. A. SIMONDS.

STEAM TRAP.

APPLICATION FILED FEB. 29, 1904.

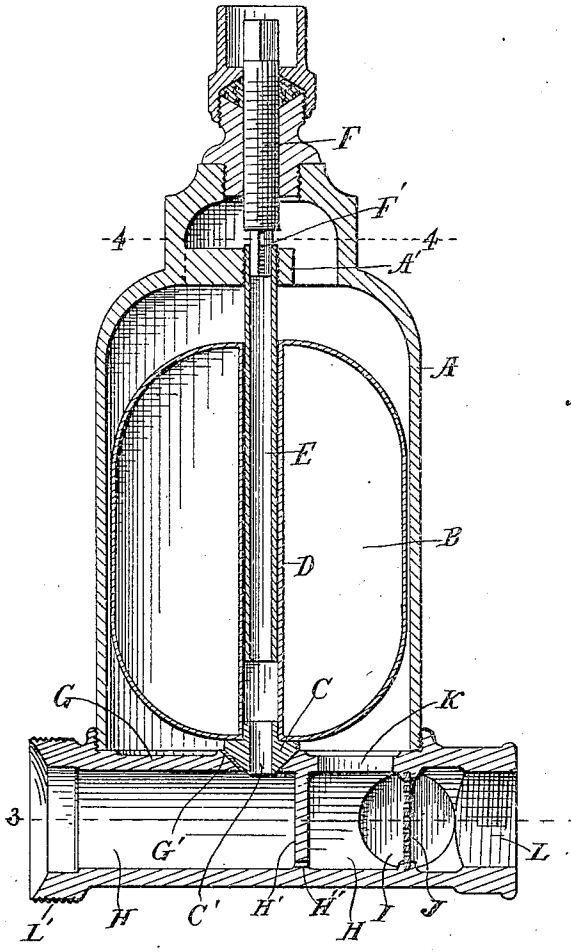

Fig. 1.

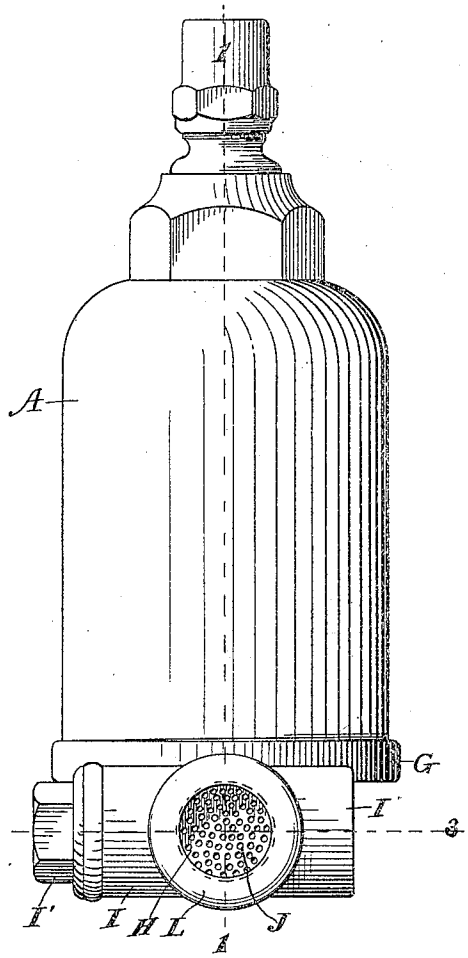

Fig. 2.

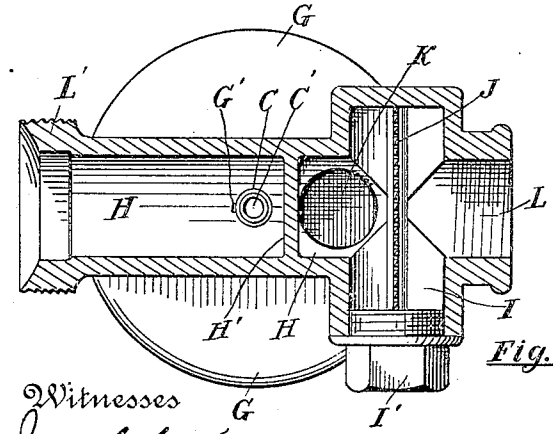

Fig. 3.

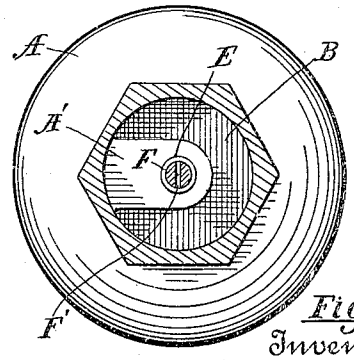

Fig. 4.

Witnesses

Joseph Kirwin

Georgiana Chace

Inventor

Frank A. Simonds

By Luther V. Moulton

Attorney

UNITED STATES PATENT OFFICE.

FRANK ARTHUR SIMONDS, OF GRAND RAPIDS, MICHIGAN, ASSIGNOR OF ONE-THIRD TO CLARA D. BURNOP, OF ALBANY, NEW YORK.

STEAM-TRAP.

No. 801,407. Specification of Letters Patent. Patented Oct. 10, 1905.

Application filed February 29, 1904. Serial No. 195,878.

To all whom it may concern:

Be it known that I, FRANK ARTHUR SIMONDS, a citizen of the United States, residing at Grand Rapids, in the county of Kent and State of Michigan, have invented certain new and useful Improvements in Steam-Traps; and I do hereby declare the following to be a full, clear, and exact description of the invention, such as will enable others skilled in the art to which it appertains to make and use the same.

My invention relates to improvements in steam-traps, and more especially to such traps for use in conjunction with a steam-heating apparatus; and its object is to provide the same with certain new and useful features hereinafter more fully described, and particularly pointed out in the claims, reference being had to the accompanying drawings, in which—

Figure 1 is a vertical section of a device embodying my invention, taken on the line 1 1 of Fig. 2; Fig. 2, an elevation of the same; Fig. 3, a horizontal section on the line 3 3 of Figs. 1 and 2, and Fig. 4 the same on the line 4 4 of Fig. 1.

Like letters refer to like parts in all of the figures.

A represents a case inclosing a float B and detachably mounted upon a suitable bed-plate G, in which bed-plate is a central opening closed by a suitable valve C, attached to the float and opened thereby to permit the accumulated water to escape.

To provide a guide-pin for the float and also to provide a passage for the escape of air from the device and to maintain circulation through the same, I provide the float with a tube D, extending through its vertical axis, surrounding and slidable on a fixed tube E, supported in the axis of the case by means of a suitable rigid arm A′, projecting from the side of the case. The upper end of this tube E opens into the upper part of the case and in conjunction with the tube D and an opening C′ in the valve forms a continuous passage extending from the upper part of the case to the discharge side of the passage H on the under side of the bed-plate G. To regulate the flow through this passage or to wholly close the same, a vertically-adjustable screw F is provided, having a reduced and transversely-slotted lower end F′ inserted in the upper end of the tube D and vertically adjusted by means of any suitable key applied to its outer end, whereby the opening formed by the slot is manually adjusted. The passage H is divided at one side of the valve C by a partition H′, in the lower part of which partition is a small drain-opening H″ to slowly drain off any water that may accumulate in the device. This opening is made too small to pass all of the water when the device is in operation, so that no steam or air will blow through it. The respective ends of the passage H are provided with suitable means for connecting the pipes thereto, as at L and L′, L being at the intake end and L′ at the discharge end of this passage. Near the end L is a transverse chamber I, in the axis of which is a vertically-arranged screen or perforated partition J to stop any scale or other solids and prevent the same from clogging the device. The end of this chamber is closed with a removable plug I′, whereby by removing the plug the screen J can be taken out and the accumulated matter stopped by the screen can be removed as occasion may require. A small drain-opening G′ is also provided adjacent to the valve C, whereby the water is slowly drained off from the upper part of the device when the same is out of use.

K is an opening from the intake portion of the passage H to the body of the case A, whereby any water in excess of the amount that will pass through the small opening H″ will flow into the case A and when sufficient has accumulated will raise the float B, and thus open the valve C and escape into the discharge side of the device.

By the construction shown it will be observed that an adjustable escape-opening is provided from the upper part of the case A to the discharge side of the device, whereby any air accumulated therein will be drawn off and circulation through the device at all times may be both maintained and regulated. When the float B rises and opens the valve, the current of water will wash out whatever obstruction, if any, that may accumulate in the small opening G′. The screen J is intended to be of finer mesh than the opening H″, whereby the latter opening will not be obstructed by any matter that may pass the screen J. When out of use, the water accumulated in the device is slowly drained off through the openings G′ and H″, thus preventing any damage from freezing. The device is especially intended for use in connec-

tion with steam-heating systems upon which a vacuum is maintained, the end L being connected to receive the water condensed in a radiator and the end L′ connected to the return-pipes of the system.

Having thus fully described my invention, what I claim, and desire to secure by Letters Patent, is—

1. The combination of a case having a bottom exit-opening and an inlet-opening, a valve to close the exit-opening and having a central opening, a float attached to said valve to open the same and having an axial tube connecting with the opening of the valve, a fixed tube on which the tube in the float is slidable, an arm in the top of the case to support the fixed tube, and manually-adjusted means to partially or wholly close the upper end of the fixed tube.

2. The combination of a case having a bottom exit-opening and an inlet-opening, a valve to close the exit-opening and having a central opening, a float attached to the valve to open the same, an axial tube on the float and connected to the opening in the valve, a fixed tube on which the tube in the float is slidable, an arm in the upper part of the case to support the fixed tube, and a screw extending outside the case at one end and engaging the upper end of the fixed tube at the other end to partially or wholly close the same.

3. The combination of a case, a bed-plate closing the lower end of the case and having inlet and exit openings and passages, a float in the case, a tube in the vertical axis of the float, a valve to close the exit-opening, and having an opening in its axis, a stationary tube on which the first-named tube is slidable, and a screw having a reduced and divided end inserted in the end of the stationary tube, to partially or wholly close the same.

4. The combination of a case, a bed-plate closing the bottom of the case, an exit-opening in the axis of the bed-plate, an inlet-opening in the bed-plate, inlet and exit passages below the bed-plate, a float in the case, a valve attached to the float and closing the exit-opening, an air-vent connecting the upper part of the case and the exit-passage, and manually-adjusted means for partially or wholly closing said air-vent.

5. The combination of a case, a bed-plate to close the bottom of the case, inlet and exit openings in the bed-plate, a valve to close the exit-opening, a float to operate the valve, inlet and exit passages beneath the bed-plate, a screen in the inlet-passage, and a partition between the inlet and exit passages and having a small drain-opening therethrough.

6. The combination of a case, a bed-plate to close the bottom of the case, inlet and exit openings in the bed-plate, a valve to close the exit-opening, a float to operate the valve, inlet and exit passages beneath the bed-plate and divided by a partition having a small drain-opening, a transverse chamber extending across the inlet-passage, a screen in the chamber, and a removable plug closing the end of the chamber.

7. The combination of a case, a bed-plate having inlet and exit openings, and a small drain-opening, and inlet and exit passages divided by a partition having a small drain-opening, a valve to close the exit-opening, a float to operate the valve, and a screen in the inlet-passage.

8. The combination of a case, a bed-plate to close the bottom of the case and having inlet and exit openings and inlet and exit passages, a valve to close the exit-opening and having an opening in its axis, a float to operate the valve, a tube in the axis of the float and connected with the valve-opening, a fixed tube on which the first-named tube is slidable, an arm in the case supporting the fixed tube, and a screw having a reduced and divided end inserted in the fixed tube.

9. The combination of a case having exit and inlet openings in the bottom, a valve to close the exit-opening and having an axial opening, a float to open the valve, a tube extending vertically through the float, and connected to the opening in the valve, a fixed tube on which the first-named tube is slidable, an adjustable screw having a reduced and slotted end inserted in the last-named tube, inlet and exit passages beneath the case and divided by a partition having a drain-opening, a transverse chamber to the inlet-passage, a removable screen in said chamber, and a removable plug to close the end of the chamber.

In testimony whereof I affix my signature in presence of two witnesses.

FRANK ARTHUR SIMONDS.

Witnesses:
LUTHER V. MOULTON,
GEORGIANA CHACE.