March 25, 1958 A. L. SIMONDS ET AL 2,828,379

FOOT SWITCH

Filed Dec. 27, 1955 2 Sheets-Sheet 1

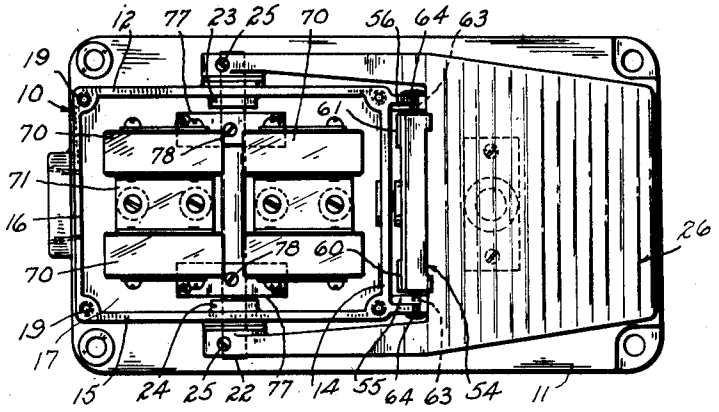

FIG.1

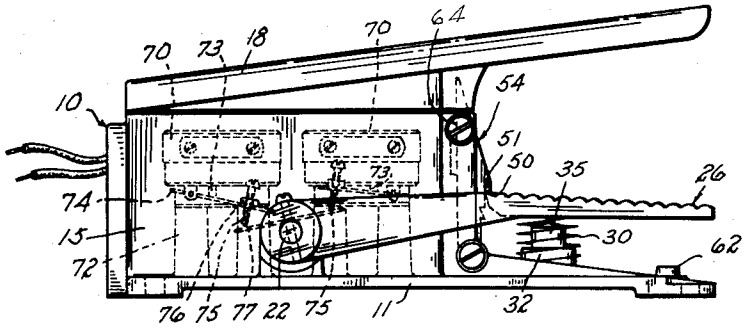

FIG.2

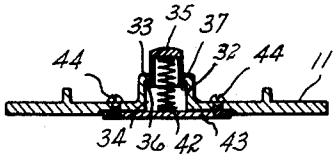

FIG.3

INVENTORS
ALBERT L. SIMONDS
DELWIN C. GINN

BY Lindsey and Prutzman
ATTORNEYS

March 25, 1958 A. L. SIMONDS ET AL 2,828,379

FOOT SWITCH

Filed Dec. 27, 1955 2 Sheets-Sheet 2

FIG. 4

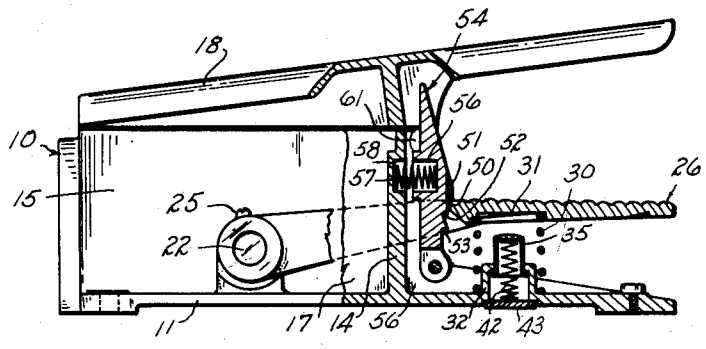

FIG. 5

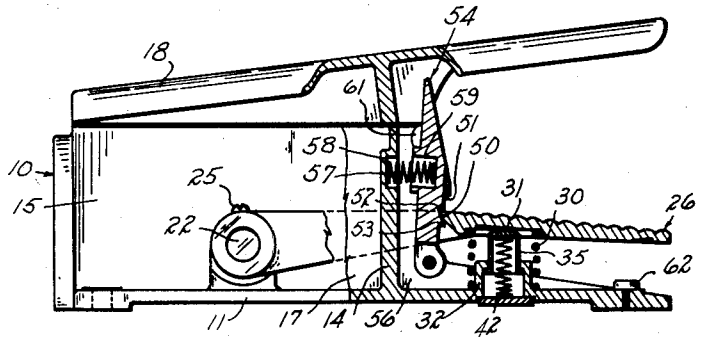

FIG. 6

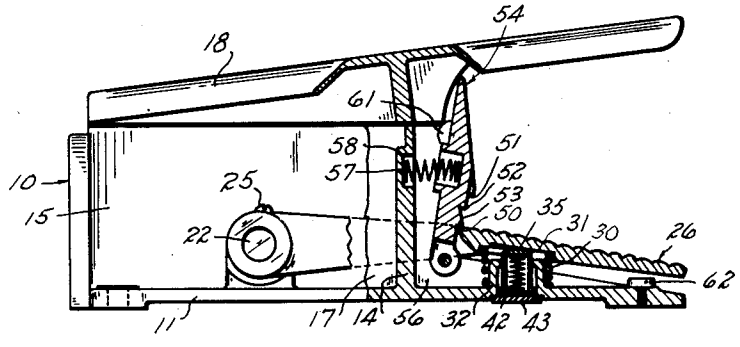

INVENTORS
ALBERT L. SIMONDS
DELWIN C. GINN
BY
Lindsey and Prutzman
ATTORNEYS

United States Patent Office 2,828,379 Patented Mar. 25, 1958

2,828,379

FOOT SWITCH

Albert L. Simonds, Woodstock, Conn., and Delwin C. Ginn, Fiskdale, Mass., assignors to The Linemaster Switch Corporation, Woodstock, Conn., a corporation of Connecticut

Application December 27, 1955, Serial No. 555,446

6 Claims. (Cl. 200—86.5)

This invention relates to foot switches, and more particularly to an improved foot switch having a multi-position operation.

In certain situations frequently found in industry, it is desirable to control a plurality of electrical circuits in a predetermined sequence by the use of foot switches. In such a circumstance, it is frequently necessary to employ a separate foot switch for each circuit with the operator actuating each switch in the sequence desired. This practice, of course, necessitates the use of an unwieldly number of switches, requires more highly skilled and trained operators, and even then creates a problem of fatigue and error as well as time delay. Further, when it is desired to place all of the circuits in the condition necessary to halt the operation controlled thereby, it is often necessary for the operator to manipulate more than one foot switch and, as normally more than one foot switch cannot be actuated at the same time by one operator, a possible safety problem is created. Further, the use of a plurality of foot switches may make necessary the visual observation of the switches by the operator in order to determine the proper switch to be actuated and its condition.

It is therefore an object of this invention to provide a foot switch of improved and novel design having a multi-position treadle by which a plurality of electrical circuits may be controlled in a predetermined sequence.

It is a further object of this invention to provide in such a foot switch means permitting the operator to place the switch in the desired operative condition in a simple and easy manner without visually observing the switch.

It is another object of this invention to provide in such a foot switch means to quickly return the switch to the initial or at rest condition from any of its other positions which is simple and easy to manipulate and which at the same time is arranged so that inadvertent actuation is effectively avoided.

Another object of the invention is to provide a foot switch of the type referred to which can be quickly converted for non-latching operation, if desired.

Other objects will be in part obvious and in part pointed out more in detail hereinafter.

The invention accordingly consists in the features of construction, combination of elements and arrangement of parts which will be exemplified in the construction hereafter set forth and the scope of the application of which will be indicated in the appended claims.

In the drawings:

Figure 1 is a top view of a foot switch constructed in accordance with this invention with the cover removed;

Figure 2 is a side view of the foot switch of Figure 1 with the cover in place;

Figure 3 is a cross sectional view of a portion of the base of the switch in Figure 1;

Figure 4 is a side view of the foot switch of Figure 1 with a portion of the switch cut away to show a portion of the operating elements;

Figure 5 is a side view as in Figure 4 with the operating elements in the first operated position; and

Figure 6 is a side view as in Figure 4 with the operating elements in the second operated position.

With reference to the drawings, the foot switch shown therein and constructed in accordance with this invention is comprised of a housing **10** having a base **11** and upright walls **12**, **14**, **15**, and **16** forming a switch compartment **17** opening upwardly. A cover **18** is mounted on the housing **10** by means of screws (not shown) received in the tapped holes **19** on the upwardly facing surface of the walls of the housing. The cover **18** extends substantially the complete length of the switch to provide a guard preventing inadvertent operation of the switch, as might occur by an object falling on the switch. A shaft **22** extending outwardly at both ends through the walls **12** and **15** is rotatably journaled in said walls **12** and **15** and in the bosses **23** and **24** on said walls. Mounted on and fixed to either end of the shaft by means of the screws **25** is a treadle **26**. A main treadle spring **30**, having one end received in a recess **31** in the underside of the treadle and its other end engaging the base **11** about the upwardly extending boss **32**, serves to bias the treadle in a counterclockwise direction. As shown in Figure 3, the boss **32** is provided with a recess **33** and an aperture **34** defining a lip portion **37**. A cap **35** in the form of an inverted cup-shaped element is slidably received in the aperture **33** and is provided with a shoulder **36** to limit its upward movement by engagement with the underside of the lip **37** of the boss **32**. A secondary treadle spring **42** is engaged at one end with a spring plate **43** secured to the underside of the base **11** by means of screws **44** so as to enclose the recess **34** in the boss. The other end of the spring **42** is received in and engaged with the cap **35** to urge the cap upwardly. For a purpose to be hereinafter explained, it is preferable that the main spring **30** and the secondary spring **42** be of comparable strength.

The treadle **26** is provided with a laterally disposed latching edge **50** adapted to be sequentially engaged by the latching shoulders **51**, **52**, and **53** laterally disposed on the latching lever **54** which is pivotally mounted at its lower end to the webs **55** and **56** of the housing **10**. The lever **54** is biased in a counterclockwise treadle engaging direction by means of the latch spring **57**, one end of which is received in the recess **58** of the wall **14** and the other end of which is received in the recess **59** of the latching lever **54**. A pair of bosses **60** and **61** are provided adjacent the upper or free end of the lever **54** and serve to limit the pivotal movement of the latching lever, as will be hereinafter described.

Contained within the switch compartment **17** are four electrical switches **70** mounted by means of brackets **71** to upright supports **72** on the base **11** of the switch. Each of said switches **70** is provided with an actuating plunger **73** and with a pivoted actuating lever **74** adapted to be selectively engaged with its associated actuating plunger. A screw **75** extends through each of the levers **74** near the free end thereof and is retained in adjusted position by means of a locking nut **76**. In accordance with this invention, an actuating plate **77** is mounted intermediate its ends by means of a screw **78** to the shaft **22** adjacent both shaft journaling bosses **23** and **24**. The manner of mounting of the actuating plate **77** provides the plate with a rocking motion when the treadle **26** is moved from one pivotal position to another. As can be readily observed from Figure 2 of the drawings, the screws **75** may be selectively threaded toward or away from the actuating plate **77** so that actuation of the plunger **73** of any one switch will take place at a preselected pivotal position of the treadle.

With particular reference now to Figure 4 of the draw-

ings, the latching lever 54 and treadle 26 are in a position hereinafter referred to as the raised position of the switch. In this position, the latching edge 50 of the treadle is engaged with the latching shoulder 51 of the lever 54 to hold the treadle at the limit of its counterclockwise movement. In this position of the treadle the switches 70 are in the condition desired at the beginning of the operation to be controlled by the foot switch. In Figure 5 the treadle 26 has been depressed so that it is in contact with the top of the cap 35. The latching shoulder 50 of the treadle is now engaged by the latching shoulder 52 of the latching lever to retain the treadle in what will be hereinafter referred to as the first operated position of the switch. The actuating plate 77 has been rotated to place the switches 70 in the condition desired at this step in the sequence of operation. In Figure 6 the treadle has been further depressed to a pivotal position which will be hereinafter referred to as the second operated position, wherein the secondary treadle spring 42 as well as the main treadle spring 30 is under compression. In the second position, the latching edge 50 of the treadle is engaged by the latching shoulder 53 of the latching lever, and the actuating plate 77 has been further rotated to place the switches 70 in the condition desired at this step in the sequence of operation.

In the operation of the switch from the raised position to the first operated position, it will be apparent to the operator when he has depressed the treadle to the first operated position shown in Figure 5 because of the "feel" provided when the treadle comes into contact with the secondary spring cap and thus meets the additional resistance of the secondary spring. When the operator depresses the treadle further, the free end of the treadle will eventually strike the rubber bumper 62 located on the base 11, thus indicating to the operator that the second operated position has been reached. Thus there has been provided a means whereby the operator may position the treadle to obtain the desired circuit actuation without visually observing the switch.

As will be apparent from the above description, the treadle will be maintained in the first or second operated position by the latching lever until such time as this lever is disengaged from the treadle. This is accomplished by moving the latching lever in a counterclockwise direction to permit the treadle springs 30 and 42 to return the treadle to the at rest position shown in Figure 4. The counterclockwise movement of the latching lever is limited by engagement of the bosses 60 and 61 on said lever with the wall 14 of the housing. When the latching lever is in engagement with the wall 14, the latching shoulder 51 of said lever will still be in engaging relationship with the treadle 26 to thereby limit the counterclockwise movement of the treadle. Since the release of the latching lever requires a direction of movement at right angles to the direction of movement when the switch is actuated, it is clear that inadvertent release of the latching lever will be effectively avoided. At the same time, it is a simple matter for the operator to move the toe of his foot forwardly to release the latching lever when desired, and this can be done in a kicking movement, particularly in emergency, the switch element being sufficiently rugged and otherwise constructed to withstand such violent treatment.

In accordance with this invention, if it is not desired to operate the switch as a maintained contact switch or in other words, if it is not desired to maintain the treadle latched in either the first or second pivotal position, there has been provided a means to lock the latching lever 54 in the position shown in Figures 2 and 4. To this end a pair of tapped holes 63 are provided in the housing 10 which are in registry with apertures (not shown) in the bosses 60 and 61 on the upper end of the latching lever when the lever is in the position shown in Figures 2 and 4. A screw plug 64 is threaded inwardly of each of the tapped holes 63 and received in the apertures of the bosses 60 and 61 to retain the latching lever in the position shown in Figures 2 and 4. Thus, if the treadle 26 is depressed to either the first or second operated position, it will be immediately returned to the raised position as soon as the depressing force is removed. Thus, it can be seen that this invention provides a switch for multistage operation which is capable of either maintained or momentary contact.

For simplicity of presentation and description, the switch embodying the invention has been described and shown in the drawings as a three position switch. It will be apparent, however, that a foot switch constructed in accordance with this invention may be designed to have more than two actuated positions by providing additional latching shoulders on the latching lever and additional springs coaxially of the springs 30 and 42.

It is believed that the operation of the novel foot switch described herein is apparent from the foregoing description. It can be seen that there has been provided a foot switch of novel construction which will permit the control of a plurality of electrical circuits in a predetermined sequence and which is simple and rugged in design assuring long and trouble-free service even under adverse operating conditions.

As many changes could be made in the above construction and many apparently widely different embodiments of this invention could be made without departing from the scope thereof, it is intended that all matter contained in the above description or shown in the accompanying drawings shall be interpreted as illustrative and not in a limiting sense.

It is also to be understood that the language used in the following claims is intended to cover all of the generic and specific features of the invention herein described and all statements of the scope of the invention which, as a matter of language, might be said to fall therebetween.

We claim:

1. In a foot switch, a housing, a treadle mounted on said housing for movement from a raised position to a depressed position, a plurality of switches in the housing responsive to movement of said treadle, a releasable latch mounted for movement relative to the treadle and having means engageable with the treadle to maintain the treadle in said depressed position and in at least one predetermined intermediate position spaced between said raised and depressed positions, a spring upwardly biasing the treadle during the entirety of its movement between said raised and depressed positions, and a second spring disposed in parallel arrangement relative to the first spring upwardly biasing the treadle only during movement thereof between said intermediate and depressed position.

2. In a foot switch, a housing, a treadle mounted on said housing for movement between a raised position and a depressed position, a plurality of switches in the housing responsive to movement of said treadle, a releasable latching lever mounted on the housing for limited movement toward and away from said treadle, said lever having a plurality of latching shoulders spaced longitudinally thereof and engageable with the treadle to maintain said treadle in said depressed position and in at least one predetermined intermediate position spaced between said raised and depressed positions, a spring upwardly biasing the treadle during the entirety of its movement between said raised and depressed positions, and a second spring disposed in parallel arrangement relative to the first spring upwardly biasing the treadle only during movement thereof between said intermediate and depressed position.

3. In a foot switch, a housing, a treadle mounted on said housing for movement between a raised position and a depressed position, a plurality of switches in the housing responsive to movement of said treadle, a releasable latch mounted on the housing for movement relative to the treadle and having means engageable with the treadle to maintain the treadle in said depressed position and in at

least one predetermined intermediate position spaced between said raised and depressed positions, a spring engaged between the treadle and the housing when the treadle is in raised position urging the treadle upwardly toward said raised position, a second spring supported on the housing and engageable with the treadle to urge the treadle upwardly toward said intermediate position, said second spring being spaced out of engagement with the treadle when the treadle is in raised position a distance corresponding to movement of the treadle between said raised and intermediate position.

4. In a foot switch, a housing, a foot treadle mounted on said housing for pivotal movement between a raised position and a plurality of depressed positions, switch means in the housing responsive to movement of the treadle, a first spring continually urging the treadle toward the raised position, a second spring disposed in parallel arrangement relative to said first spring urging the treadle upwardly toward an intermediate position only during movement of the treadle between said intermediate position and the lowest of said depressed positions, and releasable latch means for retaining the treadle in selected depressed position.

5. In a foot switch, a housing, a treadle pivotally mounted on said housing for movement between a raised position and a depressed position, a first spring extending between the housing and treadle for urging said treadle towards said raised position, a second spring disposed in parallel arrangement relative to said first spring and initially engageable with the treadle during depression thereof at an intermediate position spaced between said raised and depressed positions for urging the treadle toward the intermediate position, switch means in the housing responsive to movement of said treadle, and a releasable latch to maintain said treadle in a depressed position comprising a lever pivotally mounted on said housing and having means for engaging said treadle to prevent upward movement thereof, and a spring urging said lever into treadle engagement.

6. In a foot switch, a housing, a treadle pivotally mounted on said housing for movement between a raised position and a depressed position, a latching edge on said treadle extending laterally thereof, a latching lever pivotally mounted at one end on said housing for limited movement in the plane of movement of said treadle, said lever having a plurality of latching shoulders extending laterally and spaced longitudinally thereof for engagement with said latching edge of the treadle in said depressed position and in at least one predetermined intermediate position of the treadle spaced between said raised and depressed positions, a spring engaged between the treadle and the housing during the entirety of the movement of the treadle between said raised and depressed positions to urge the treadle upwardly, a second spring engaged between the treadle and the housing only during movement of the treadle between said intermediate position and the depressed position to urge the treadle toward said intermediate position, a plurality of switches mounted within said housing, and switch actuating means including an actuating member mounted for rocking movement in response to movement of the treadle, and selectively adjustable means to actuate said switches in response to movement of said actuating member to a position corresponding to a selected pivotal position of said treadle.

References Cited in the file of this patent

UNITED STATES PATENTS

1,772,147	Hayward	Aug. 5, 1930
1,814,880	Young	July 14, 1931
2,313,166	Nicholas	Mar. 9, 1943
2,535,021	Stone et al.	Dec. 19, 1950
2,578,340	De Lancey	Dec. 11, 1951
2,640,116	Dyer et al.	May 26, 1953

FOREIGN PATENTS

562,319	Great Britain	June 27, 1944