US005665950A

United States Patent [19]

Rottner et al.

[11] Patent Number: 5,665,950

[45] Date of Patent: Sep. 9, 1997

[54] **FAT BIT BAR CODE READER**

[75] Inventors: **Bruce E. Rottner**, Rochester; **Kenneth Alan Lindsay, Jr.**, Brockport; **William Joseph Clare**, Bergen, all of N.Y.

[73] Assignee: **Eastman Kodak Company**, Rochester, N.Y.

[21] Appl. No.: **453,434**

[22] Filed: **May 30, 1995**

[51] **Int. Cl.**[6] **G06F 17/00**

[52] **U.S. Cl.** **235/375**; 235/462

[58] **Field of Search** 235/462, 375

[56] **References Cited**

U.S. PATENT DOCUMENTS

3,663,803	5/1972	Mohan et al. .
4,707,120	11/1987	Yamamoto .
5,122,645	6/1992	Saeki et al. .
5,128,519	7/1992	Tokuda .
5,164,574	11/1992	Ujiie et al. .
5,212,367	5/1993	Takenaka .
5,268,562	12/1993	Lazaridis .

Primary Examiner—Harold Pitts

Attorney, Agent, or Firm—Nixon, Hargrave, Devans & Doyle

[57] **ABSTRACT**

A reader for reading bar code symbols containing so called "fat bits" arranged on exposed film is described. A strip of film **10** which has one or more frames **11** has a boundary edge **13** with space in which zero, one, or two fat bits **14** is provided for each frame **11**. A light source **28** directs light through the boundary edge **13** of the strip **10**. A pair of optical sensors **25**, **27** receives the light directed through the boundary edge **13**. The sensors **25**, **27** each output a signal corresponding to the presence or absence of a fat bit to a detector circuit **220**. The detector circuit **220** outputs a signal corresponding to the fat bit to a controller **250** as the strip moves between the light source **28** and the sensors **25**, **27**. An encoder **230** measures the displacement of the strip **10** as it moves, and outputs pulse signals to the controller **250** representative of units of strip **10** displacement. The controller **250**, while receiving the output from the detector circuit **220**, measures the width of the fat bit **14** by translating the pulse signals from the encoder **230** into signals representative of the width of the fat bit. The presence of valid fat bits is then verified where the measured width of the fat bits is within a certain range indicative of a valid fat bit. The reader also reads the DX code **12** for each frame **11** on edge **13** by outputting signals from the pair of optical sensors **25**, **26** to the detector circuit **220** representative of received light directed through the boundary edge **13** corresponding to the DX code **12** bits. The controller **250** then measures the width of each DX code **12** bit in the same manner as fat bits **14** using the pulse signals from encoder **230** while receiving from the detector circuit **220** output indicative of a DX code **12** bit. The measured DX code **12** bit widths are then stored in controller **250** for later decoding. Sensors **25** and **26** are spaced from each other to optimize reading of DX code **12**, while sensors **25** and **27** are spaced from each other by less than the minimum width of a fat bit **14**. The width of the fat bit **14** is substantially greater than the width of bars representing DX code **12** bits.

17 Claims, 6 Drawing Sheets

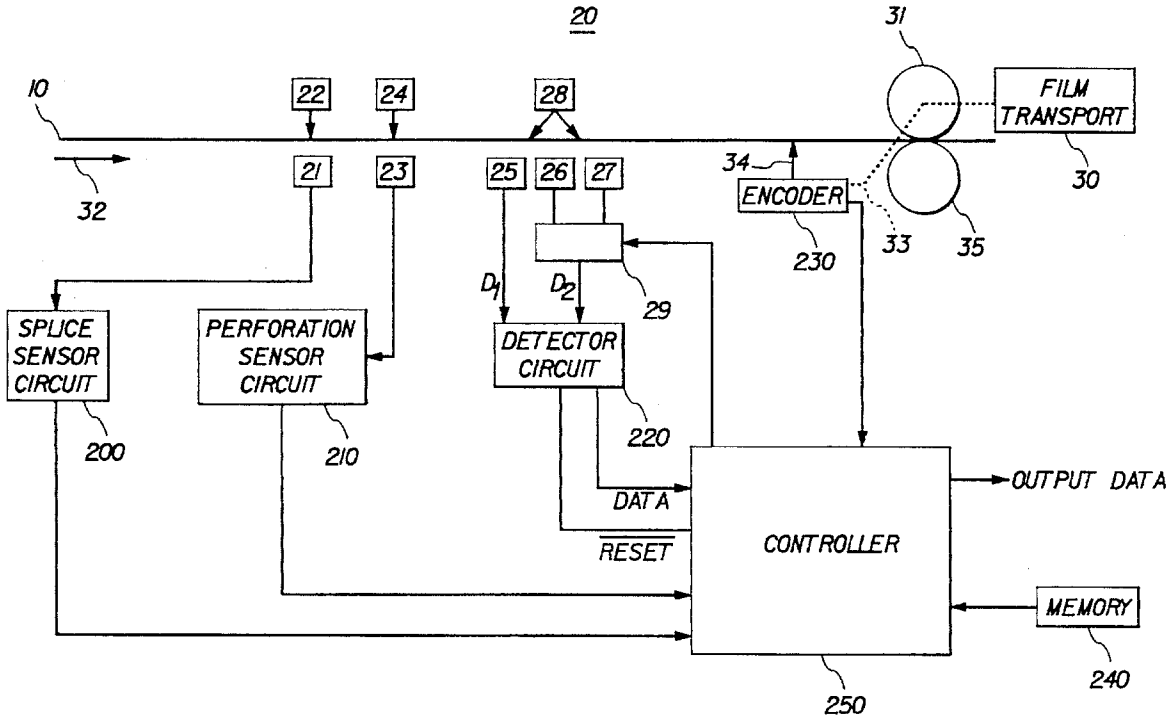

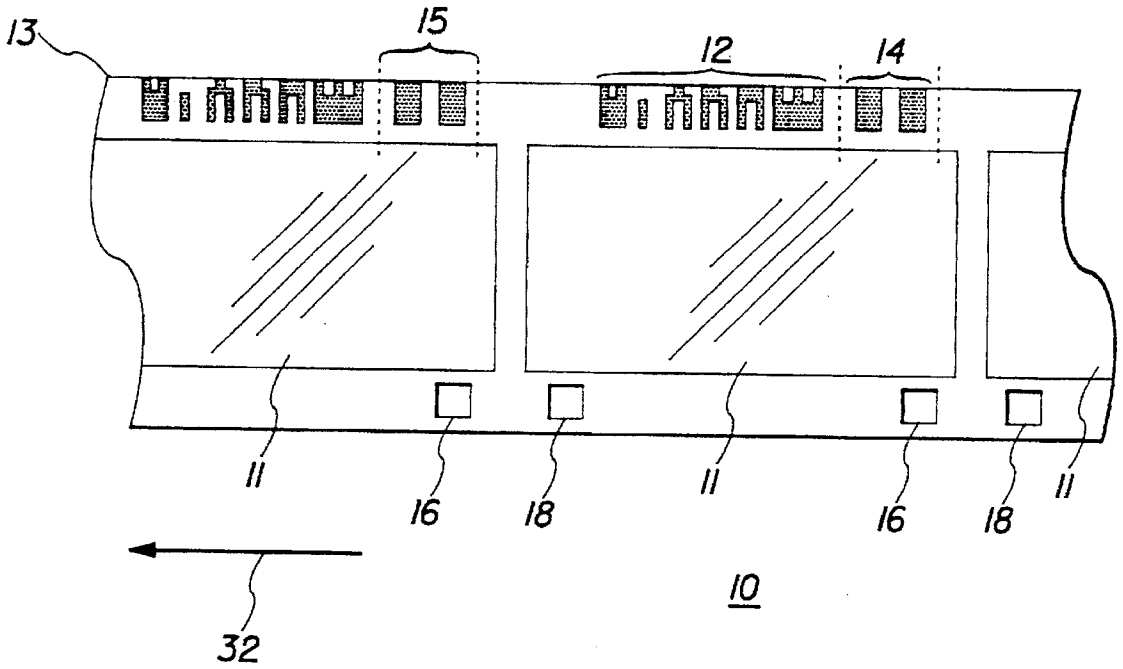

FIG. 1

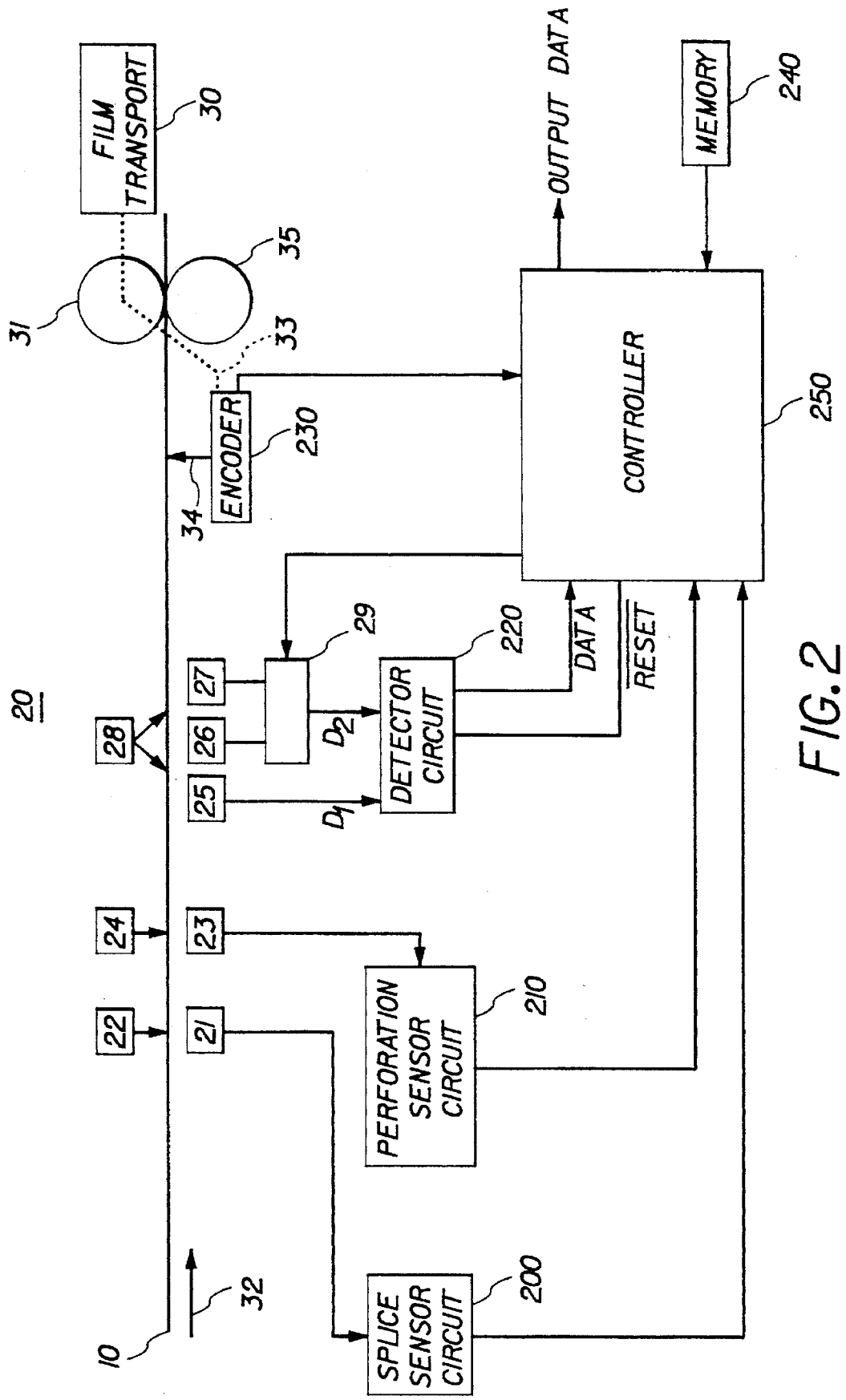
FILM TRANSPORT
30
31
35
33
ENCODER
230
34
OUTPUT DATA
MEMORY
240
CONTROLLER
250
20
28
27
26
25
29
D_2
D_1
DETECTOR CIRCUIT
220
DATA
RESET
24
23
22
21
PERFORATION SENSOR CIRCUIT
210
SPLICE SENSOR CIRCUIT
200
10
32

FIG. 2

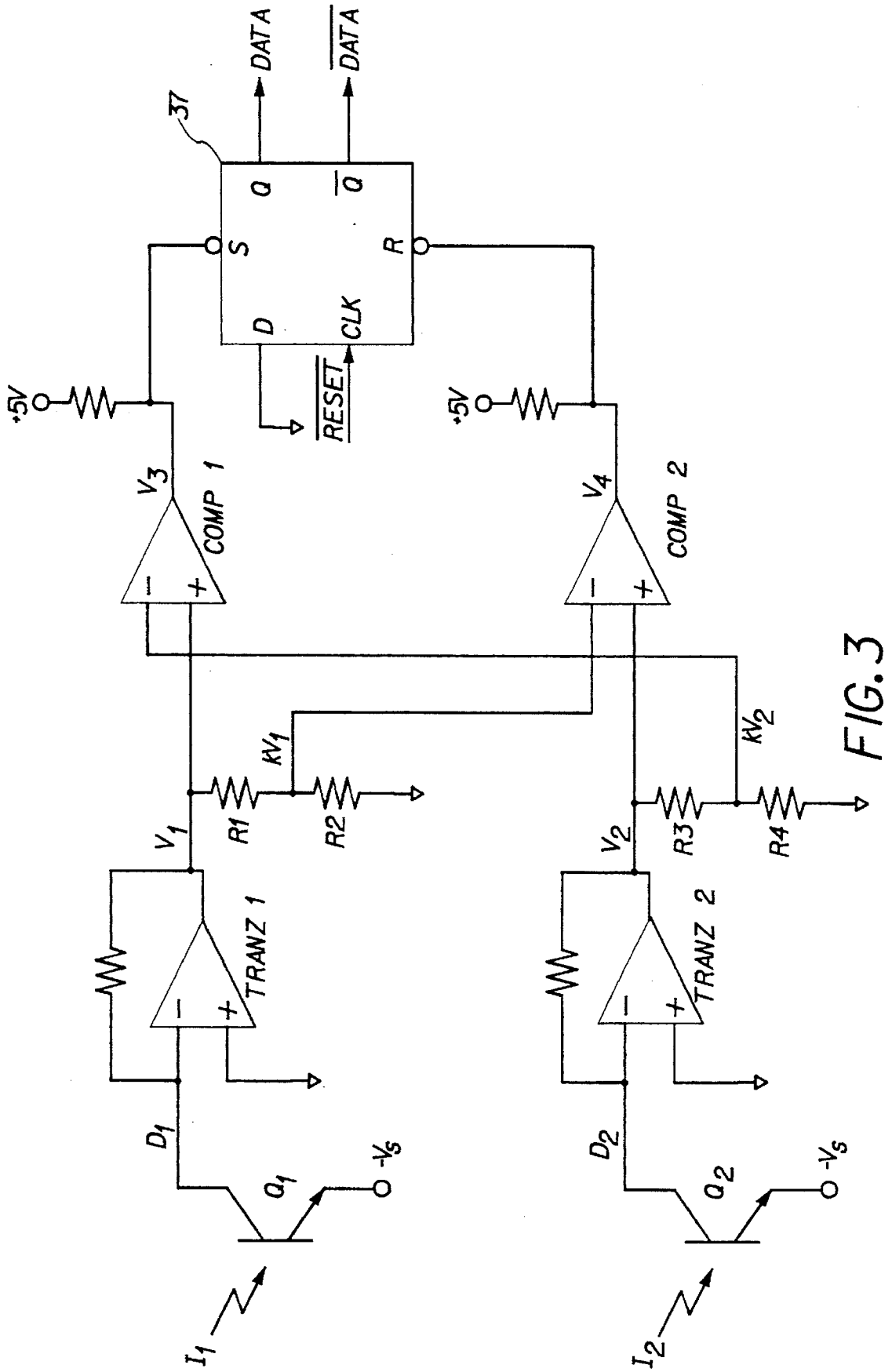
DATA
$\overline{DATA}$
37
Q
$\overline{Q}$
S
R
D
CLK
$\overline{RESET}$
+5V
+5V
V_3
COMP 1
V_4
COMP 2
kV_1
kV_2
R1
R2
R3
R4
V_1
V_2
TRANZ 1
TRANZ 2
D_1
D_2
Q_1
Q_2
$-V_S$
$-V_S$
I_1
I_2

FIG. 3

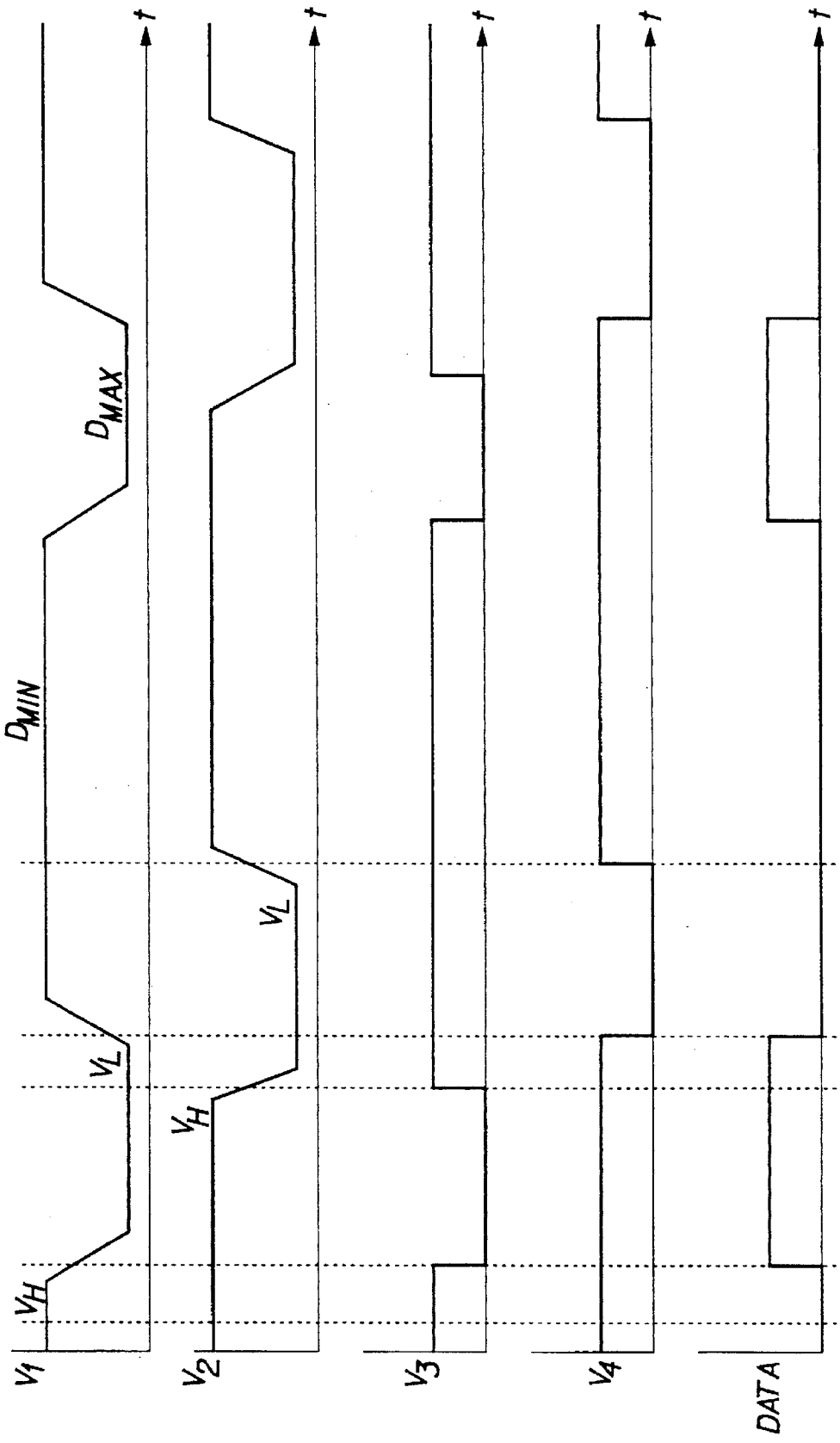

FIG. 4

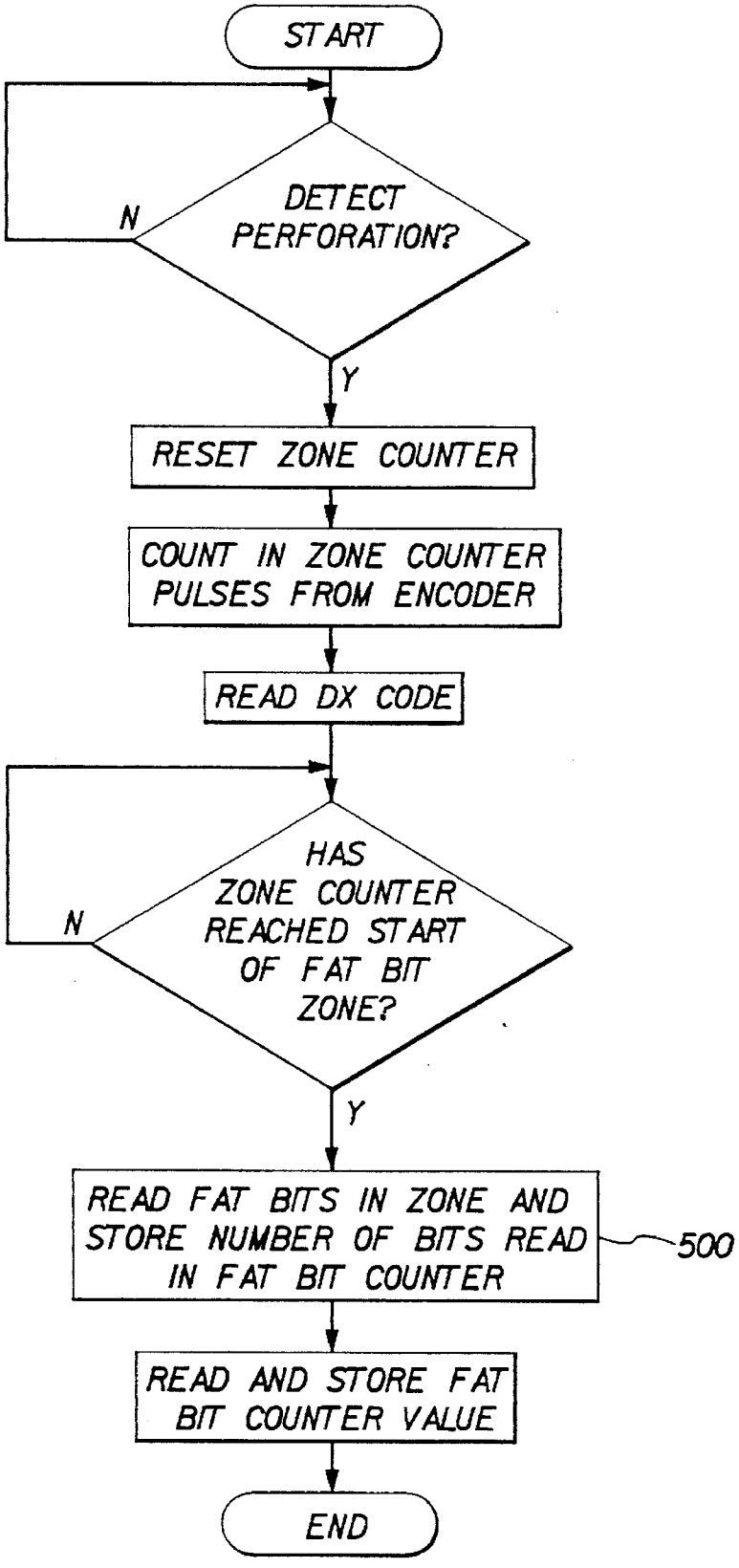
START
DETECT PERFORATION?
N
Y
RESET ZONE COUNTER
COUNT IN ZONE COUNTER PULSES FROM ENCODER
READ DX CODE
HAS ZONE COUNTER REACHED START OF FAT BIT ZONE?
N
Y
READ FAT BITS IN ZONE AND STORE NUMBER OF BITS READ IN FAT BIT COUNTER
500
READ AND STORE FAT BIT COUNTER VALUE
END

FIG. 5

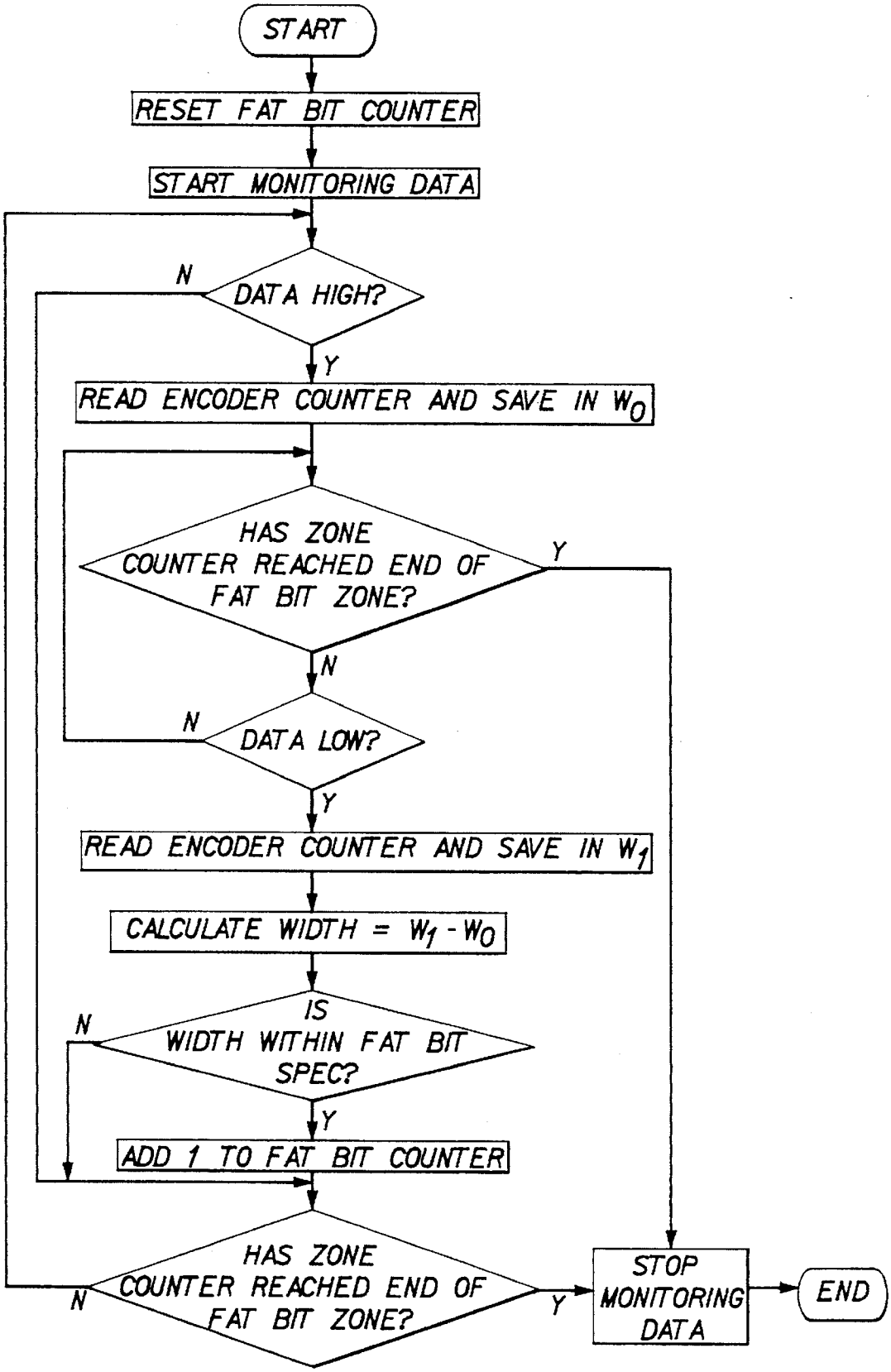
START
RESET FAT BIT COUNTER
START MONITORING DATA
DATA HIGH?
N
Y
READ ENCODER COUNTER AND SAVE IN W_0
HAS ZONE COUNTER REACHED END OF FAT BIT ZONE?
Y
N
DATA LOW?
N
Y
READ ENCODER COUNTER AND SAVE IN W_1
CALCULATE WIDTH = $W_1 - W_0$
IS WIDTH WITHIN FAT BIT SPEC?
N
Y
ADD 1 TO FAT BIT COUNTER
HAS ZONE COUNTER REACHED END OF FAT BIT ZONE?
N
Y
STOP MONITORING DATA
END

FIG. 6

FAT BIT BAR CODE READER

FIELD OF INVENTION

The present invention relates generally to an apparatus and method for reading bar codes imaged on photographic film (also known as film codes), and particularly, to reading bar code bits imaged on photographic film after manufacture, such as in a camera or other reprographic.

BACKGROUND OF THE INVENTION

Existing film code readers are designed to read a 23-bit, two track DX bar code which is imaged on the edge of 35 mm film during film manufacture. The DX code provides information about the manufactured film, including type, speed, and manufacture. The DX code information is conventionally used in calculating exposure time when the film is printed. This DX code has a 0.015" minimum bar width, a clock and data track, a start and end sentinel, and a parity bit. All these features are used to verify and assure the validity of the DX code when read. A reader for DX code is optimized to read the code, provided that there are sharp transitions in density or contrast between the film background and DX code. This contrast is visible as the darkness of the code with respect to the background.

A problem with the DX code is that it is limited to film information existing at the time of manufacture. Additional information is often desired as to parameters designated by the user of the film for printing negatives of developed film that can only be available after manufacture. Additional bar codes may be exposed on the film while in a camera to overcome this problem. These codes have bar widths three or four times greater than DX codes, and hence are called fat bits. However, due to the uncontrolled environment of a camera, as compared to the environment during film manufacture, the density, integrity, size and shape of the fat bits vary greatly making reading difficult. Reading of fat bits is further made difficult because any imperfections as may be caused by debris, scratches, edge fog, chemical stains during the film developing process, etc. . . can adversely effect exposed fat bits, or create false fat bits. The above conditions make reading fat bits difficult for conventional DX code readers.

SUMMARY OF THE INVENTION

It is a principal object of this invention to provide an improved code reader for reading reliably a fat bit code exposed in a camera along the edge of the film, which accommodates imperfections on the film and code as may be caused by variations in code density, debris, chemical stains, edge fog, and film scratches.

It is another object of this invention to provide an improved code reader capable of reading reliably DX codes, and fat bit codes exposed in a camera.

Briefly described, a reader is provided in accordance with the invention capable of reading fat bits on exposed developed film having a strip of film with one or more frames, and a boundary edge having sufficient space for holding zero, one, or two fat bits for each frame. The reader includes a light source for directing light through the strip and a pair of optical sensors for receiving light from said light source passing through the edge. The sensors each provide an output signal corresponding to the intensity of the received light representative of the presence or absence of the fat bit in the space along the edge. The sensors are spaced apart. Means is provided for moving the edge of the strip along a path extending across the sensors. The path is located between the light source and the sensors. Means responsive to the output signals from the sensors is provided for measuring the width of each fat bit as the strip is translated across the sensors. Means is then provided for verifying that the measured width is within a range expected for a valid fat bit. The reader may also have means for counting the number of verified fat bits.

In accordance with a still further object of the invention, there is provided a reader for reading bar codes on a strip of film with one or more frames, and a boundary edge having first and second regions containing respectively first and second codes thereon, with each code having bits of different widths, and the second code having a controlled width. The reader includes a light source for directing a beam of light on the edge of the strip, and first, second, and third sensors for receiving the beam via the strip from the light source. Each sensor provides a signal corresponding to the received light at the respective sensor. Means is provided for moving the strip and sensors with respect to each other, preferably, the strip moves past fixed sensors so that the edge of the strip passes across the sensors and between the light source and the sensors. The first sensor is spaced from the second sensor by a distance less than the width of the bits of the first bar code, while the first sensor is spaced from the third sensor by a distance less than the width of the bits of the second bar code. Means is provided for measuring the width of each bit of the first bar code responsive to the first and second sensor signals, which correspond to the received light representing the first code bits, when the first region of the edge containing the first bar code moves across the first and second sensors, and measuring the width of each bit of the second bar code responsive to the first and third sensor signals, which correspond to the received light representing the second code bits, when the second region of the edge containing the second bar code moves across the first and third sensors. The reader also includes means for verifying that the width of the second bar code bits are within a range of a valid bit of the second bar code.

The foregoing and other objects feature and advantages of the present invention will become more apparent upon reading of the following description in connection with the accompanying drawings wherein like reference numerals indicate like parts.

BRIEF DESCRIPTION OF DRAWINGS

FIG. **1** is an illustration of a film strip having DX coding and fat bits.

FIG. **2** is a block diagram of a reading system implementing the invention.

FIG. **3** is an electrical schematic diagram of the detector circuit and its associated sensors shown in FIG. **2**.

FIG. **4** is a timing diagram illustrating the operation of the detector circuit of FIGS. **2** and **3**.

FIG. **5** is a flow chart showing the operation of the system of FIG. **2** for reading DX codes and fat bits.

FIG. **6** is a flow chart showing the operation of Step **500** in FIG. **5**.

DETAILED DESCRIPTION OF THE INVENTION

FIG. **1** shows an example of a partial strip **10** of exposed developed film having a DX code **12** and a fat bit **14** code. Each frame **11** of the strip **10** has a boundary edge **13** having two regions, one for the DX code **12**, and the other for the

fat bit **14** code. There can be zero, one, or two fat bits **14** exposed for each frame **11**. For illustrative purposes, FIG. **1** shows two fat bits. The size or width of each fat bit **14** is at least 3.4 times the minimum width of a bit (a bar) of the DX code **12**, which nominally may be 0.015 inches.

The fat bits **14** are exposed on strip **10** when a frame **11** is exposed in a camera. The number of bits **14** exposed effectively stores information as to how the camera user desires the picture to be printed from a particular frame **11**. The camera is designed to expose the appropriate number of fat bits **14** according to either user command or selected parameters, or a default condition for the particular type of camera. For example, the presence of zero, one or two fat bits **14** can convey information as to the aspect ratio used to print the negative in frame **11** associated with the fat bits **14** imaged. The number of fat bits **14** may refer to three different prim aspect ratio formats, such as a pan (3 inches× 10 inches or 4 inches×11 inches), HDTV (3 inches×6 inches or 4 inches×7 inches), and classic (3 inches×5 inches or 4 inches×6 inches).

As shown in FIG. **1**, the fat bits **14** are exposed in a zone or region **15** to right of the DX code **12**, shown by the dashed lines along the boundary edge **13**. The fat bits **14** are exposed in this zone **15**, which is indexed in the direction of the strip **10** with respect to the metering perforation **18** for the frame **11**. Also, during film manufacture, the DX code **12** for each frame **11** is located in a region along the edge **13** which is indexed from the metering perforation **18** of the frame **11**.

The environment in the camera exposing the fat bits **14** on the edge **13** is more variable, from camera to camera, as well as within the same camera, therefore, fat bits **14** will not have the consistent sharp density transitions as that of the DX codes **12**. Density transitions refer to the fat bit's contrast with respect to the film background density of the edge **13**. Further, imperfections in the film may be caused in the camera or in development of the film, such as debris, chemical stain, scratches, and edge fog may exist in the fat bit zone **15**. Due to this variability in the fat bits **14** and film, and the absence of built-in code validity features in the fat bits **14**, a standard DX reader may not be capable of reading both DX codes **12** and fat bit **14** codes with desired reliability.

FIG. **2** is a block diagram of the system **20** implementing the invention which may be part of the printer which exposes sensitized paper on which prints are made from negatives within frames **11** after strip **10** is exposed and developed. The strip **10** (shown in side view) is moved by the film transport **30** mechanism across a series of sensors **21**, **23**, **25**, **26**, and **27**. Film transport **30** mechanism includes a metering roller **31** attached to a motor shaft (not shown) for moving the strip **10** at a controlled velocity along a path **32**, and a nip roller **35** for applying a force against strip **10** opposite metering roller **31**. The strip **10** is oriented last frame first, so that along edge **13** for a given frame **11**, the DX code **12** will pass the sensors before the fat bit zone **15**. This orientation is shown by the arrow **32** in both FIGS. **1** and **2**. The strip **10** may be a series of film orders, each film order being a separate roll of exposed developed film. Each order is connected by a splice, such as by connective tape.

As the strip **10** is transferred along the path **32**, it first passes the splice sensor **21** which receives light directed from an LED **22** located on side of the strip opposite the splice sensor **21**. The splice sensor **21** is a photo-diode located near the middle of the strip, and provides an electrical signal representative of the received light from the LED **22** to the splice sensor circuit **200**. The splice sensor circuit **200** sends a signal to the controller **250**, indicating whether a splice has passed across the splice sensor **21**.

After passing the splice sensor **21**, the strip **10** moves across the perforation sensor **23**. The perforation sensor **23** is a photo-diode located such that the edge of the strip containing the perforations **16**, **18** (see FIG. **1**) passes across the sensor **23**. The perforation sensor **23** receives pulses of light from an LED **24** located on the side of the strip opposite the perforation sensor as the perforations pass between the LED **24** and sensor **23**. Sensor **23** generates electrical pulse signals representative of the received light. The perforation sensor circuit **210** receives the sensor signals and sends a signal to the controller **250** indicating when the perforations **16**, **18**, and particularly the metering perforation **18**, has passed across the sensor **23**. The metering perforations **18** are recognized in circuit **210** due to the relative timing of the pulses from sensor **23**.

After passing the perforation sensor **23**, the strip **10** is transferred across photo-detectors **25**, **26**, and **27**. Photo-detectors **25**, **26**, and **27** overlie the edge **13** of the strip **10** containing the regions or zones having the DX code **12** and the fat bit **14** code. Photo-detectors **25**, **26**, and **27** receive light from an LED **28**. The signals from photo-detectors **25**, **26**, and **27** are representative of the intensity of the received light from the LED **28** corresponding to density variations in strip **10**.

Detector circuit **220** has two current inputs D_1 and D_2. Photo-detector **25** provides an electrical signal to the D_1 input of detector circuit **220**, and photo-detectors **26** and **27** each provide a separate electrical signal to a multiplexer **29**. A signal from controller **250** to multiplexer **29** selects the electrical signal from either photo-detector **26** or **27** to be sent to the D_2 input of detector circuit **220**. During DX code **12** reading by system **20**, the detector circuit **220** receives signals at its D_1 and D_2 inputs from the pair of photo-detectors **25** and **26**, respectively, wherein controller **250** selects via multiplexer **29** to transmit photo-detector **27**'s signal to the D_2 input of the detector circuit **220**. While during fat bit **14** code reading the detector circuit **220** receives signals at its D_1 and D_2 inputs from the pair of photo-detectors **25** and **27**, respectfully, wherein controller **250** selects via multiplexer **29** to transmit photo-detector **26**'s signal to the D_2 input of the detector circuit **220**. Photo-detectors **25** and **27**, are spaced apart by a distance along the path **32** which is less than the minimum width of a fat bit **14**. Photo-detector **26** is also spaced apart from photo-detector **25**, but by a distance along path **32** which is optimized for DX code **12** reading. Preferably, this optimized distance is less than the width of a DX code **12** bit.

The detector circuit **220** sends an output DATA signals to the controller **250**. The DATA are digitized signals which when at a high level, correspond to the interval between when the first sensor in path **32**, photo-detector **25**, detects reduced light intensity caused by a density increase along the edge **13**, and when the second sensor in path **32**, either photo-detector **26** or **27** depending on multiplexer **29**'s setting to the D_2 input, detects a like intensity reduction corresponding to the same density increase.

The detector circuit **220** is reset upon receiving a controller **250** output RESET signal, which occurs when a signal from the splice sensor circuit **200** indicates the presence of a splice in the strip **10**. The operation of the detector circuit **220** to produce the DATA signal will be described in detail in reference to FIGS. **3** and **4**.

An encoder **230** is provided in the system **20**, which is coupled, as indicated by dash line **33**, to the motor shaft of

the metering roller **31**. The encoder **230** monitors strip **10** motion by providing a pulse signal to the controller **250** representing when the strip **10** travels a finite distance as measured by the angular rotation of the encoder **230**. This finite distance is a small fraction of the DX code **12** bit size. An arrow **34** from the encoder **230** to the strip **10** is shown in FIG. **2** to represent this distance measuring function of the encoder **230**. The encoder may alternatively be a wheel frictionally coupled to and moving with the strip **10** having 2000 increments/revolution to provide fine distance resolution. Operation of the encoder **230** will be discussed later in reference to FIGS. **5** and **6**.

The controller **250** contains a computer operating a program for controlling the system **20** and processing data from the circuits **200**, **210** and **220**. The controller **250** operates responsive to the signals received from the splice sensor circuit **200**, perforation sensor circuit **210**, and detector circuit **220**. The controller **250** also measures the width of DX code **12** bits or fat bits **14** using an encoder counter in the controller **250**, which provides a running count of the number of pulses received from the encoder **230**. Memory **240** is addressable by the controller **250** for storing data representing the minimum and maximum width values of a fat bit, which provides a width range of a valid fat bit to compare against measured fat bits. These values may be stored in terms of the number of pulses from the encoder **230**, which correspond to width values. A fat bit counter in the controller **250** counts the number of valid fat bits found in the fat bit zone **15** of a frame **11** of the strip **10**. A zone counter in the controller **250** counts the encoder pulses from a detected metering perforation. Memory **240** also stores data representing the number of encoder pulses from the metering perforation to where the fat bit zone **15** starts, and where the fat bit zone **15** ends. This data is checked by the controller **250** against the zone counter to determine when fat bit **14** reading should take place.

The controller also provides an output data signal representing the detected DX code **12** and/or fat bits **14** for each frame **11** of each order of the strip **10**. This output data may be sent to a high speed printer for producing prints according to the read information from the DX codes **12** and/or fat bits **14** codes.

FIG. **3** shows an electrical diagram of detector circuit **220** of FIG. **2** having inputs D_1 and D_2 from transistors Q_1 and Q_2. Transistor Q_1 represents photo-detector **25**, and I_1 represents the current producing light (intensity of illumination) received at photo-detector **25** through the strip **10** from the LED **28**. Transistor Q_2 represents either photo-detector **26** or **27** depending on multiplexer **29**'s setting (multiplexer not shown in FIG. **3**), and I_2 represents the current producing light received by photo-detector **26** or **27**, respectively, through the strip **10** from the LED **28**. I_1 and I_2 correspond to the density of the strip and vary in amplitude according to the amount of light received by the photo-detectors **25**, and **26** or **27**, respectively. This light will be received either via a light or dark density region on the edge **13** of the strip **10**. Thus, I_1 and I_2 may either be at I_L, representing the current from either Q_1 or Q_2 when the respective photo-detector sense a dark density region, or at I_H, when sensing a light density region.

A transimpedance amplifier (TRANZ1) converts the D_1 current from Q_1 into voltage V_1. A second transimpedance amplifier (TRANZ2) converts the D_2 current from Q_2 into voltage V_2. TRANZ1 and TRANZ2 may both be of LF444 type integrated circuit chips. A comparator (COMP1) receives V_1 at its positive input, and voltage kV_2 at its negative input. A second comparator (COMP2) receives V_2 at its positive input, and voltage kV_1 at its negative input. The threshold constant k has a value between 0 and 1. A voltage divider composed of R1 and R2 is connected to V_1 to provide kV_1 to the negative input of COMP2 from a connection between R1 and R2. Similarly, a second voltage divider composed of R3 and R4 is connected to V_2 to provide kV_2 to the negative input of COMP1.

Resistor pairs, R1, R2, and R3, R4, are selected to have resistance values to provide k between 0 to 1 for voltages kV_1 and kV_2. Voltages kV_1 and kV_2 are threshold voltage levels and are necessary for proper operation of comparators COMP1 and COMP2 during reading of fat bits **14** or DX code **12** bits. The constant k for these voltages is empirically determined according to the minimum density (D_{MN}) and maximum density (D_{MAX}) for the fat bits on the strip **10**, while assuring that the worst case fuzzy fat bit is above the noise density level. Once constant k has been selected for fat bits **14** it will also provide voltages kV_1 and kV_2 suitable for reading the sharper density transitions of DX code **12** bits.

COMP1 operates by outputting voltage V_3, which will be at a high level when COMP1's positive input voltage is greater than its negative input voltage, and at a low level when COMP1's positive input voltage is less than its negative input voltage. COMP2 operates similarly to produce output voltage V_4. COMP1 and COMP2 may both be LM339 type integrated chips.

A D type serf reset flip-flop **37** receives V_3 at an inverted S input, and V_4 at an inverted R input. Outputs DATA and $\overline{\text{DATA}}$ are shown, although only DATA is shown as connected to the controller **250** (FIG. **2**). Alternately however the inverted output $\overline{\text{DATA}}$ may be sent to the controller **250**, and the controller **250** accordingly programmed.

Input D to flip-flop **37** is grounded such that the output DATA will be at a high level when flip-flop **37** is set, and a low level when the flip-flop **37** is reset. Clock input (CLK) is connected to the $\overline{\text{RESET}}$ output of the controller **250**, which is used by the controller **250** to reset flip-flop **37** to a low DATA level. This flip-flop **37** may be of a SN74ALS74 type. Because voltage levels at the inputs to COMP1 and COMP1 may at times be too close for accurate comparator COMP1 and COMP2 operation, a hysteresis circuit (not shown in FIG. **3**) may be added to each comparator. Such a circuit provides for feedback of part of the output voltage of a comparator to one of its inputs, such that there will always be a voltage difference between its two inputs.

During reading of fat bits **14**, detector circuit **220** receives inputs signals on D_1 and D_2 from photo-detectors **25** and **27**, respectively, while the fat bit zone **15** on edge **13** is being transferred over photo-detectors **25** and **27**. The detector circuit **220** operates in the same way for reading DX code **12** bits as for fat bits **14**, except that circuit **220** receives on D_2 signals from photo-detector **26** rather than from photo-detector **27** while the DX code **12** on edge **13** is being transferred over photo-detectors **25** and **26**. To reiterate, the selecting of photo-detector **26** or **27** is enabled by the controller **250** via signals to multiplexer **29**. The multiplexer **29** is set by controller **250** to transmit signals to the D_2 input of circuit **220** from photo-detector **27** during fat bit reading, and from photo-detector **26** during DX code **12** reading. For purposes of discussion, operation of the circuit **220** will hereinafter be described in connection with fat bit **14** reading using the sensor pair of photo-detector **25** and **27**.

Operation of the detector circuit of FIGS. **2** and **3** is shown in the timing diagram of FIG. **4**. FIG. **4** shows five states of detector circuit operation denoted as **S0**, **S1**, **S2**, **S3**, and **S4**. State **0** represents the case when no fat bits are detected at

either photo-detector **25** or photo-detector **27**, hence V_1 and V_2 are both at high voltage level, V_H. COMP1 and COMP2 outputs, V_3 and V_4 respectively, are high since their positive inputs are at a greater voltage (V_H) than their negative inputs (kV_H).

At State **1**, photo-detector **25** detects the leading edge of a fat bit as the fat bit moves across photo-detector **25**, and hence V_1 changes to voltage V_L. Photo-detector **27** has not yet detected the fat bit since photo-detector **25** is located before photo-detector **27** in the path of the strip. COMP1 output, V_3, now goes low, because COMP1 's positive input voltage is at V_L, which is less than its negative input voltage at kV_H. This sets the flip-flop **37**, and DATA goes high. V_4 remains unchanged. DATA will now remain high until the flip-flop **37** is reset.

At State **2**, photo-detector **27** detects the leading edge of the fat bit which is still being detected by photo-detector **25**, thus V_2 changes to voltage V_L. COMP1 output voltage V_3 returns to a high level, since COMP1's positive input voltage is at V_L, which is greater than its negative input voltage kV_L. V_4 remains unchanged. Note that both photo-detector **25** and photo-detector **27** detect the fat bit at the same time because they are spaced apart by a distance less than the minimum width of a fat bit. (The same occurs during DX code reading using the sensor pair of photo-detectors **25** and **26**, since photo-detectors **25** and **26** detect a DX code **12** bit at the same time because they are optimized to be spaced apart by a distance less than the minimum DX code bit width.)

At State **3**, photo-detector **25** detects the trailing edge of the fat bit which is still being detected by photo-detector **27**, hence V_1 changes to voltage V_H. V_3 remains unchanged at high since COMP1's positive input voltage (V_H) is still greater than negative input voltage (kV_L). COMP2's output, V_4, changes to a low level because COMP2's positive input voltage (V_L) is less than its negative input voltage (kV_H). In response to this low level of V_4, the flip-flop **37** resets to change DATA to a low level.

Finally at State **4**, photo-detector **27** detects the trailing edge of the fat bit, and V_2 changes to V_H. This places the detector circuit back at starting State **0**. In this manner, the detector circuit outputs DATA responsive to both photo-detector **25** and photo-detector **27** signals (i.e., currents to TRANZ1 and TRANZ2) representing a fat bit.

The operation of the system under program control is shown in the flow charts of FIGS. **5** and **6**. In FIG. **5**, the controller **250** first waits for a metering perforation **18** to be detected via the signal from the perforation detector circuit **210**. The anticipation perforation **16** may be used by the controller **250** to validate that the next perforation is a metering perforation **18**. Upon detecting the metering perforation **18**, the zone counter in the controller **250** is reset, and the zone counter starts counting pulses from the encoder **230**. Controller **250** sets the multiplexer **29** to send the signal from photo-detector **26** to the D_2 input of the detector circuit **220**. Next, the DX code **12** is read by the controller **250** along the frame **11** having the detected perforation using the detector circuit **220**. This is achieved by measuring the width of each DX code **12** bit component in terms of encoder **230** pulses while DATA corresponding to the DX code **12** bit component from the detector circuit **220** is HIGH. DX code **12** bit measuring is the same as measuring the width of fat bits **14** except sensor pair of photo-detectors **25** and **26** provide inputs D_1 and D_2 to detector circuit **220**, and reading occurs over the DX code **12** on edge **13**. (Measuring of fat bit **14** width will be shown in reference to FIG. **6**.) The controller **250** may also determine when to start and stop reading DATA representing the DX code **12** relative to the detected perforation using the zone counter, where data has been provided in the memory **240** to represent in terms of encoder **230** pulses, the distance between the detected perforation to the DX code **12** region on the edge **13**.

After reading the DX code **12**, the controller **250** sets with multiplexer **29** the signal from photo-detector **27** to the D_2 input of the detector circuit **220**. The controller **250** then determines whether the fat bit zone **15** has been entered by checking if the zone counter has reached the data in the memory **240** representing the number of pulses from the encoder **230** to the start of the fat bit zone **15** from the metering perforation **18**. Upon entering the zone, the detector circuit **220** reads the number of fat bits in the zone **15**, and stores the number of bits read in the fat bit counter (Step **500**). Step **500** will be discussed in further detail in connection with FIG. **6**. Last, the fat bit counter for the frame **11** is read and stored.

At anytime during the operation, if the splice sensor circuit **200** sends a signal to the controller **250** indicating the presence of a splice, the controller **250** issues a signal along $\overline{\text{RESET}}$ to the detector circuit **220**, which resets the flip-flop **37** so DATA is LOW. Since detection of a splice indicates a new order on the strip **10**, this assures that the detector circuit **220** is ready for the strip of the new order. The controller stores the value of the fat bit counter and the read DX code for each frame of each order for later output to a printer (not shown).

FIG. **6** shows the operation in the controller **250** for Step **500** in FIG. **5**. First, the fat bit counter is reset. The controller **250** then starts monitoring the DATA line from the detector circuit **220**. When DATA changes from a LOW to HIGH level, the value in the encoder counter is read and saved into W_o; otherwise, the controller **250** waits for DATA to go HIGH until the strip **10** has exited the fat bit zone **15** and DATA monitoring stops. The controller **250** checks whether the zone **15** is exited by comparing the zone counter to the end of zone data in memory **240**.

With a value in W_o, the controller **250** checks if the fat bit zone **15** has been exited, and if DATA has changed to a LOW state. If the strip **10** is still within the zone **15**, and DATA goes to LOW, the encoder counter is again read and saved in W_1. The controller **250** then calculates the width of the bit read by subtracting W_o from W_1 and storing the resulting value in WIDTH. If WIDTH is within the fat bit specification, i.e., the minimum and maximum fat bit width stored in memory **240**, a 1 is added to index the fat bit counter because a valid fat bit has been read. If WIDTH is outside the fat bit specification, the fat bit counter is not indexed since the read fat bit is not considered valid. The controller **250** thereafter checks if the fat bit zone **15** has been exited. DATA will continue to be monitored until the fat bit zone **15** is exited, otherwise the controller **250** will continue to read and count fat bits as described above.

In the alternative to a running encoder counter and the above WIDTH calculation, a counter in the controller **250** could be reset when DATA changes from LOW to HIGH, and then indexed for each pulse from the encoder **250** until DATA changes from HIGH to LOW. The value in this counter would represent the fat bit width, WIDTH, and can thereafter be checked to determine if WIDTH is within the fat bit specifications of a valid fat bit.

As stated earlier, the method of reading fat bits may also be applied to reading DX codes while photo-detectors **25** and **26** cross the DX code **12** of a frame **11**. Operation is the

same as in FIG. **6** except that no fat bit counter is used, and preferably no check of WIDTH against a width specification is performed. The widths measured for each DX code **12** bit read are stored in sequence in a buffer in the controller **250** for later decoding. However, verification of the width of a DX code **12** bit can be performed prior to storage in the buffer by including a step of checking the measured WIDTH against a specification range for a valid DX code **12** bit stored in memory **240**. Such a verification step may prevent reading a false DX code **12** bit on strip **10**. Alternatively, the DX code **12** reading function may be incorporated into controller **250**, such that a signal from either photo-detector **25**, **26**, or **27** is received by controller **250**, and the controller is programed to receive and decode the DX code **12** data.

Use of this invention offers several improvement to reader reliability. First, the use of encoder **230** to monitor film motion for measuring fat bit **14** widths, and comparing the width to a minimum and maximum width, minimizes the event of false fat bit reads which would be outside this width range, such as caused by scratches and edge fog. Also, the use of the encoder **230** allows for reading fat bits **14** only in specific fat bit zones **15** based on detected perforation. This feature substantially reduces the scanned in-track film length. Further, since reading is responsive to encoder **230** pulses, this eliminate erroneous detected output when film motion is not present.

The use and orientation of the two photo-detectors **25** and **27** at a spaced distance apart provides the advantage of being able to detect transitions of softly imaged fat bits. If photo-detectors **25** and **27** were too close, their compared density differences would not be sufficiently significant to trigger a transition in DATA. Further, the larger sensor area provided by the two photo-detectors **25** and **27**, as compared to detectors in a typical DX reader, provides more reliability to the reader because of the filtering out of film scratches and variations in code density. Also, the increased separation between photo-detectors **25** and **27**, in combination with larger fat bit width, optimizes the detection area for reading fat bits.

From the foregoing description, it will be apparent that there has been provided an improved code reader for reading fat bit codes exposed on film in a camera, as well as for reading DX codes on film. Variations and modification in the herein described reader in accordance with the invention, will undoubtably suggest themselves to those skilled in the art. Accordingly, the foregoing description should be taken as illustrative and not in a limiting sense.

PARTS LIST

10 Film Strip
11 Frame of Strip
12 DX Code
13 Boundary Edge Having DX and Fat Bits Codes
14 Fat Bits
15 Fat Bits Zone
16 Anticipation Perforation
18 Metering Perforation
20 The System
21 Splice Sensor
22 LED Associated With Splice Sensor
23 Perforation Sensor
24 LED Associated With Perforation Sensor
25 Photo-Detector
26 Photo-Detector
27 Photo-Detector
28 LED Associated With Photo-Detectors 1 and 2
29 Multiplexer

-continued

PARTS LIST

30 Film Transport Mechanism
31 Metering Roller
32 Path of Film Strip
33 Dashed Line Representing coupling of Encoder to Strip Transport Mechanism
34 Arrow Representing Encoder Measuring Function
35 Nip Roller
37 Flip-Flop
200 Splice Sensor Circuit
210 Perforation Sensor Circuit
220 Detector Circuit
230 Encoder
240 Memory
250 Controller

We claim:

1. A reader for reading fat bits on film in the form of a strip of film with one or more frames having a boundary edge with sufficient space containing one or more fat bits for each frame, said reader comprising:

a light source for directing light through said strip,

a pair of optical sensors for receiving light from said light source passing through said boundary edge of said strip, said sensors each providing an output signal corresponding to the intensity of said received light representative of the presence and absence of said fat bit on said boundary edge, and said sensors are spaced from each other,

means for moving said strip so that said boundary edge of said strip passes along a path across said pair of sensors and between said light source and said sensors, and

means responsive to said output signals of both said sensors for measuring the width of each said fat bit as said strip passes said sensors, said measuring means comprising means responsive to the distance said strip moves by said moving means for determining a displacement of said strip corresponding to the width of each said fat bit.

2. The reader according to claim **1** further comprising:

means for verifying that said measured width of said fat bit is within a range of a valid fat bit.

3. The reader according to claim **2** further comprising:

means for counting the number of fat bits verified by said verifying means.

4. The reader according to claim **2** where said sensors are spaced from each other at a distance less than the minimum width of said valid fat bits.

5. The reader according to claim **1** wherein said means responsive to said distance comprises an encoder responsive to the movement of said strip for providing signals representing the displacement of said strip, and means for translating said encoder signals into a representation of the width of said fat bits.

6. The reader according to claim **1** where said light source is an LED.

7. The reader according to claim **1** where each said sensor is a separate photo-detector.

8. The reader according to claim **1** wherein said strip has perforations associated with each said frame and further comprises means for locating zones on said boundary edge containing said fat bits relative to said perforations.

9. The reader according to claim **1** where said means for measuring said width comprises:

a detector for receiving said output signals from said pair of sensors which produces an output corresponding to said signals from said sensors representing each said fat bit,

a controller for receiving said output of said detector,

an encoder coupled to said moving means for providing output signals to said controller representing displacements of said strip, and

said controller having means operative while receiving said output from said detector representing each said fat bits for translating said encoder output signals into signals representing the width of said fat bit.

10. The reader according to claim **2** further comprising:

said pair of optical sensors including first and second optical sensors along said path of said strip,

a third optical sensor located between said first and said second optical sensors for receiving light from said light source passing through said boundary edge of said strip,

said first and said third sensors each providing an output signal corresponding to the intensity of said received light from DX code bits located on said boundary edge for each said frame, wherein said first and third sensors are spaced from each other by a distance less than the minimum width of said DX code bits, and

said means for measuring the width of each said fat bit further comprise means responsive to said output signals of said first and said third sensors for measuring the width of each said DX code bit as said strip passes said first and third sensors, said measuring means comprising means responsive to the distance said strip moves by said moving means for determining a displacement of said strip corresponding to the width of each said DX code bit.

11. The reader according to claim **10** further comprising means for storing said measured widths of said DX code bits.

12. The reader according to claim **10** where said means for measuring said width of said DX code bit comprises:

a detector for receiving said output signals from said first and said third sensors, and producing an output corresponding to said signals from said sensors representing said DX code bit,

a controller for receiving said output of said detector,

a multiplexer for receiving said output signals from the second and third sensors responsive to said controller for selecting said third output signals from one of said second and said third output signals and coupling the second sensor to be said detector,

an encoder coupled to said moving means for providing output signals to said controller representing displacements of said strip, and

said controller responsive to said output of said detector representing each said DX code bit for translating said encoder output signals into signals representing the width of said DX code bit.

13. A method for reading fat bits on the boundary edge of a strip of film having one or more frame comprising the steps of:

moving said strip along a path across sensing stations which are at two locations along said path,

directing light towards said boundary edge of said strip,

generating at said two locations signals corresponding to the intensity of said light passing through the boundary edge of said strip, where said locations are spaced from each other at a distance less than the minimum width of said fat bits, and

measuring the width of each said fat bit on said boundary edge of said strip while said strip moves along said path across said sensing stations, wherein said measuring step comprises determining a displacement of said strip, responsive to the distance said strip moves along said path, corresponding to the width of each said fat bit.

14. The method according to claim **13**, further comprising the step of verifying that said measured width of said fat bit is within a expected range corresponding to a valid fat bit.

15. The method according to claim **14** further comprising the step of counting the number of verified fat bits.

16. The method according to claim **13** wherein said sensing stations comprise first and second locations, and a third location between said first and said second locations, and said method further comprising the steps of:

said moving step includes moving said strip along a path across said first, said third, and said second stations,

generating at said first and said third locations signals corresponding to the intensity of said light passing through the boundary edge of said strip, wherein said first and third locations are spaced by a distance less than the minimum width of DX code bits, and

measuring the width of each said DX code bit on said boundary edge of said strip while said strip moves along said path across said first and said third sensing stations, wherein said measuring step comprises determining a displacement of said strip, responsive to the distance said strip moves along said path, corresponding to the width of each said DX code bit.

17. The method according to claim **16** further comprising storing in a buffer one or more said measured width of DX code bits.

* * * * *