Aug. 27, 1940. C. CRONAUER 2,212,587

MAILING ENVELOPE

Filed July 19, 1939 2 Sheets-Sheet 1

Fig. 1.

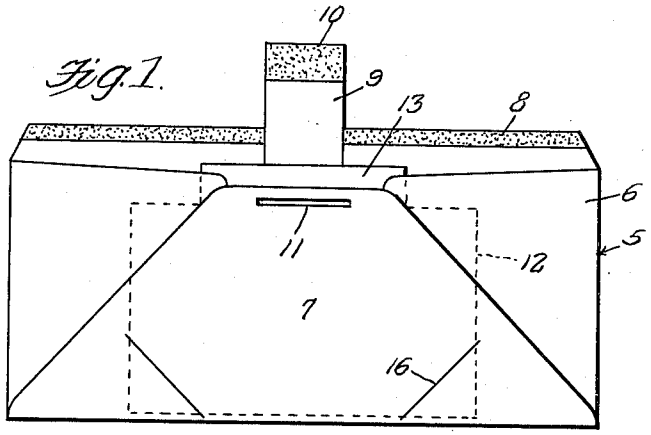

Fig. 2.

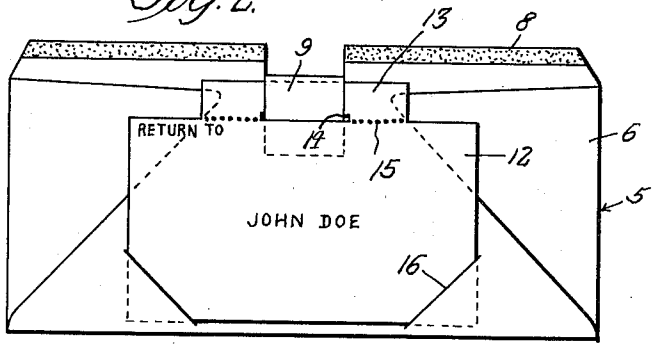

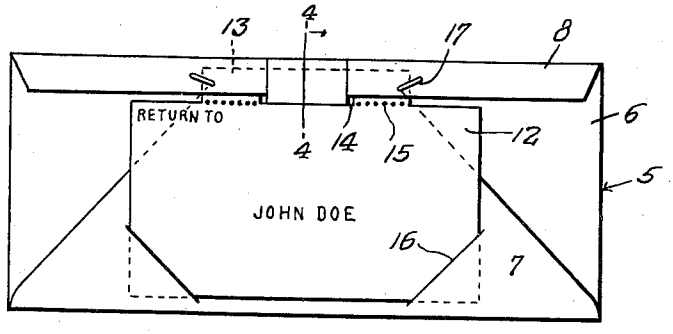

Fig. 3.

Inventor
Clarence Cronauer

By Clarence A. O'Brien and Hyman Berman
Attorneys

Aug. 27, 1940. C. CRONAUER 2,212,587

MAILING ENVELOPE

Filed July 19, 1939 2 Sheets-Sheet 2

Fig. 5.

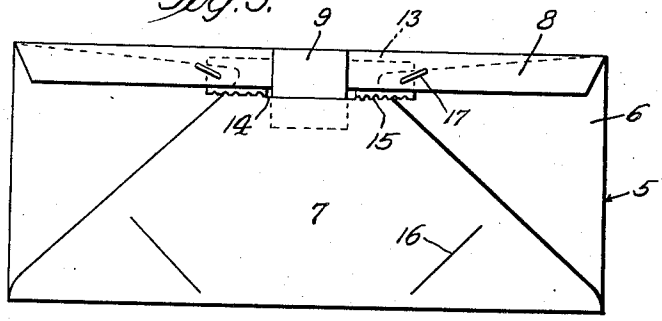

Fig. 6.

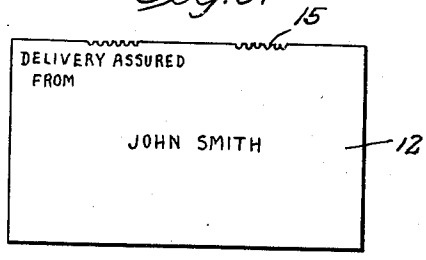

Fig. 8.

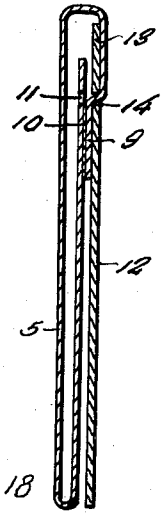

Fig. 7.

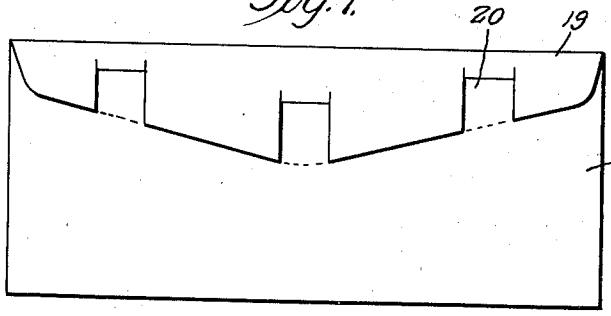

Fig. 4.

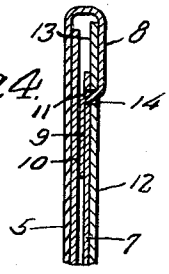

Inventor

Clarence Cronauer.

By Clarence A. O'Brien and Hyman Berman

Attorneys

Patented Aug. 27, 1940 2,212,587

UNITED STATES PATENT OFFICE

2,212,587

MAILING ENVELOPE

Clarence Cronauer, Wilkes-Barre, Pa.

Application July 19, 1939, Serial No. 285,251

3 Claims. (Cl. 229—73)

This invention relates to envelopes for mailing purposes, and has for the primary object the provision of a safe, practical and inexpensive device of this character which due to its construction will be practically impossible to open without detection and has in combination therewith a return card to be detached from said envelope by the postman of the delivery of the envelope to the person or persons to whom the envelope is addressed and the card remailed to the sender of the envelope by the postman so that the sender on receiving said card will be assured of the safe delivery of the envelope and its contents, thus the detaching of the card from the envelope by the postman and the remailing thereof the card becomes a certified delivery card to the sender.

With these and other objects in view, the invention consists in certain novel features of construction, combination and arrangement of parts to be hereinafter more fully described and claimed.

For a complete understanding of my invention, reference is to be had to the following description and accompanying drawings, in which

Figure 1 is a rear elevation illustrating an envelope constructed in accordance with my invention and showing the same prior to being sealed with the return card located therein.

Figure 2 is a rear elevation illustrating the sealing of the card to the envelope prior to the sealing of said envelope, also sealing the contents of the envelope against authorized removal.

Figure 3 is a rear elevation illustrating the envelope completely sealed and stapled with the card applied thereto.

Figure 4 is a detail sectional view taken on the line 4—4 of Figure 3.

Figure 5 is a rear elevation illustrating the envelope after the detachment of the card therefrom by the postman.

Figure 6 is a plan view illustrating the card.

Figure 7 is a rear elevation illustrating a modified form of my invention.

Figure 8 is a transverse sectional view illustrating another modification of my invention.

Referring in detail to the drawings, the numeral 5 indicates an envelope having the customary end flaps 6, rear flap 7 and closure flap 8, the latter having adhesive applied thereto. The flaps 6 and 7 are secured together as conventional so that the envelope provides a pocket only accessible by the entrance provided by the closure flap 8. The closure flap 8 includes an extension or tongue 9, a portion of which is free of said closure flap and is provided with adhesive 10 and is adapted to be inserted through a slot 11 provided in the flap 7 to adhere to the contents of the envelope and for the purpose of securing to the latter a return card 12.

The return card is preferably in the form of a postal card bearing certain indicia such as "return to the sender" on one face thereof and on the opposite face "delivery assured from the receiver of the envelope." Formed on edge of the card is a tongue 13 provided with a slot 14 through which the tongue 9 may be inserted prior to being inserted in the slot 11 of the envelope or flap 7 thereof. The connection between the card 12 and the tongue 13 is by perforated or weakened portions 15 so that the card may be easily detached from the card 13. The flap 7 is provided with diagonally arranged slots 16 which will permit opposite corners of the card to be inserted in the envelope and which coacts with the tongue 9 in firmly anchoring the card onto the exterior of the envelope so that its removal can be easily carried out by the postman on the delivery of the envelope to the person or persons to whom the envelope is addressed.

It is to be understood that when the postman detaches the card 12 from the envelope on the delivery thereof the card is remailed to the sender who on receiving the card is assured that the envelope has been delivered to the receiver with its contents.

It is to be understood that after the card 12 has been applied to the envelope, as shown in Figure 2, by the sender the closure flap 8 is brought into engagement with the flaps 6 and 7 and sealed thereto. After the sealing operation has been completed staples 17 may be passed through the closure flap 8, flaps 6 and 7, as shown in Figure 3, further assuring against unauthorized opening of the envelope without detection.

It is to be understood that the card 12 will bear a postage stamp which may be canceled at the time of the sale of the card with the envelope to obviate the necessity of canceling the stamp on the card when the latter is mailed by the postman. Of course, this canceling of the stamp may be deferred until the time the card is remailed if so desired by the postal authorities.

By referring to Figure 5 it will be seen that the card after being removed from the envelope leaves the latter completely sealed and intact in every respect so that the envelope must be opened by the receiver on the delivery thereof by the postman.

Referring to my modified form of the invention, as shown in Figure 7, the envelope is indi-

cated by the character 18 and its construction is substantially similar to the envelope 5 except the sealing flap 19 thereof is larger to overlie to a greater extent the rear flap of the envelope, the latter having a series of slots through which tongues 20 struck from the closure flap 19 may be inserted.

It is to be understood that the envelope 18 is otherwise constructed in accordance with the envelope 5 and is adapted to have the cards used in combination therewith.

As shown in Figure 8 the tongue of the envelope may be simply passed through the slot of the card 12 and secured to the outside of the envelope.

It is believed that the foregoing description, when taken in connection with the drawings will fully set forth the construction and advantages of this invention to those skilled in the art to which such device relates, so that further detailed description will not be required.

Having thus described my invention, what I claim is:

1. In a device of the character set forth, an envelope including a closure flap, said envelope having a slot in the wall thereof, a sealing tongue formed on the closure flap and partly free thereof for insertion through the slot and having adhesive thereon to seal with the contents of the envelope, a return card having a slot to receive the tongue prior to being inserted through the slot of the envelope and having a weakened portion to permit the card to be detached from the envelope without the opening of the latter by the postman for remailing to the sender.

2. In a device of the character set forth, an envelope having slots and a sealing flap, a tongue struck from said sealing flap and having adhesive thereon and adapted to be inserted through one of the slots to adhere to the contents of the envelope, a return card adapted to have opposite corners thereof inserted in certain slots of the envelope and provided with an extension connected thereto by a weakened line and having a slot through which the tongue may pass prior to entering said envelope coacting with the other slots of the envelope in securing the card to the envelope for removal by the postman on the delivery of the envelope and permit the remailing of the card to the sender.

3. An envelope including a plurality of flaps with slots in certain of said flaps and a sealing tongue carried by one of said flaps to be inserted through one of the slots, a card to enter the other slots at the corners thereof and having a slot and a weakened portion, said last-named slot adapted to receive the tongue prior to its insertion in the slot of the envelope, and staples extending through the flaps of the envelope.

CLARENCE CRONAUER.