US 20090077891A1

(19) United States

(12) Patent Application Publication

Duca et al.

(10) Pub. No.: US 2009/0077891 A1

(43) Pub. Date: Mar. 26, 2009

(54) METHOD FOR PRODUCING FUEL GAS

(75) Inventors: **William J. Duca**, Boardman, OH (US); **Keith R. Bucher, II**, Huntsville, AL (US); **Charles B. Ingram**, Rockwood, TN (US); **David C. Thompson**, Madison, AL (US)

Correspondence Address:
Maynard Cooper & Gale, PC
1901 Sixth Avenue North, 2400 Regions/Harbert Plaza
BIRMINGHAM, AL 35203-2618 (US)

(73) Assignee: **New York Energy Group**, Huntsville, AL (US)

(21) Appl. No.: **11/860,815**

(22) Filed: **Sep. 25, 2007**

Publication Classification

(51) **Int. Cl.**
C10L 3/08 (2006.01)

(52) **U.S. Cl.** ..... **48/197 FM**; 48/197 R

(57) **ABSTRACT**

A method for producing a synthesis gas from a widely varying feedstock of waste and natural fuels including providing a reaction chamber having a bottom coupled to an induction furnace, introducing a carbonaceous fuel into a molten metal contained within the reaction chamber, continuously or intermittently supplying heat and molten metal to the reaction chamber from the induction furnace and collecting a fuel gas generated within the reaction chamber.

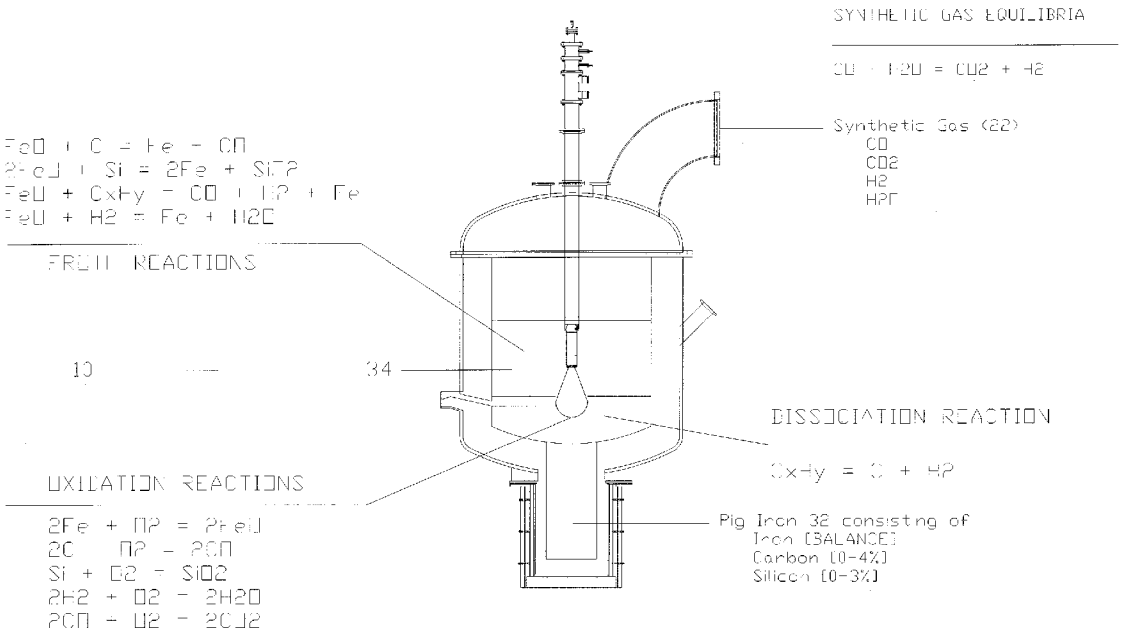

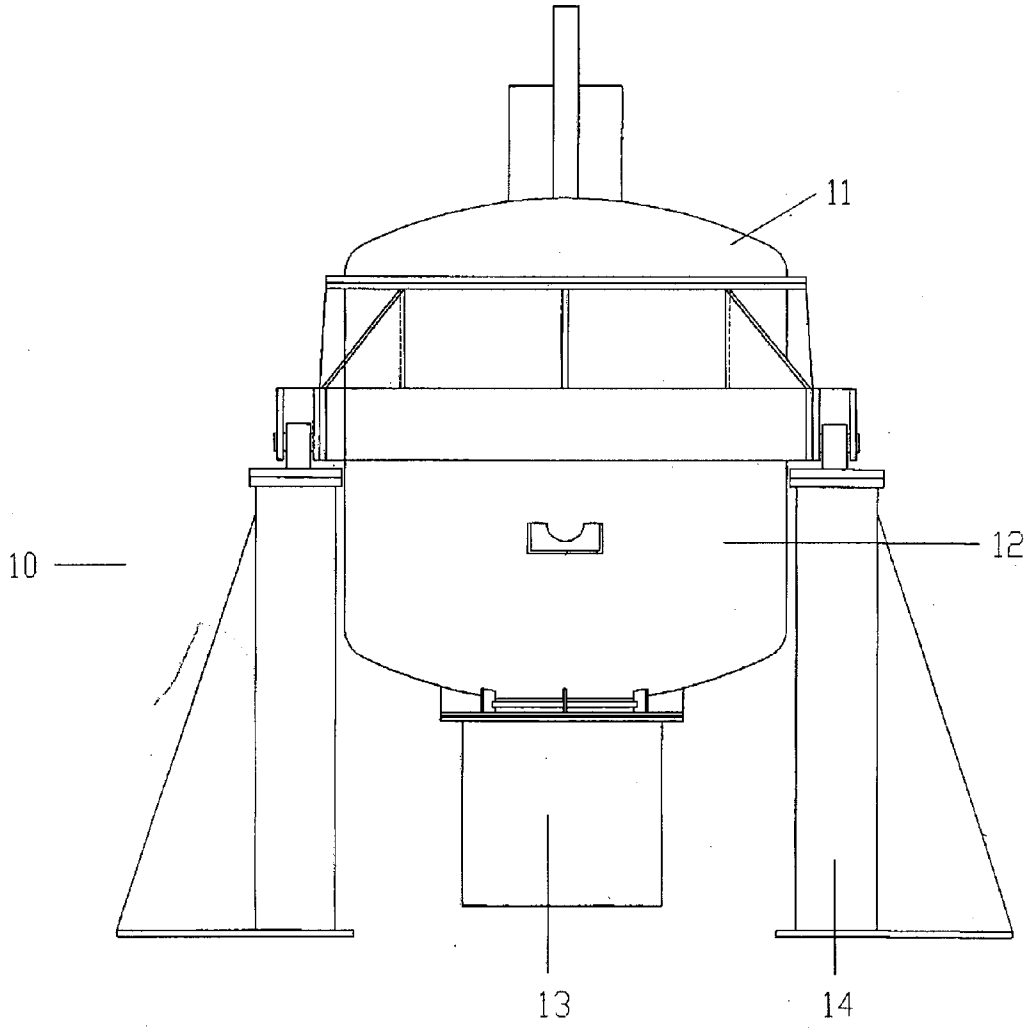

Fig. 1

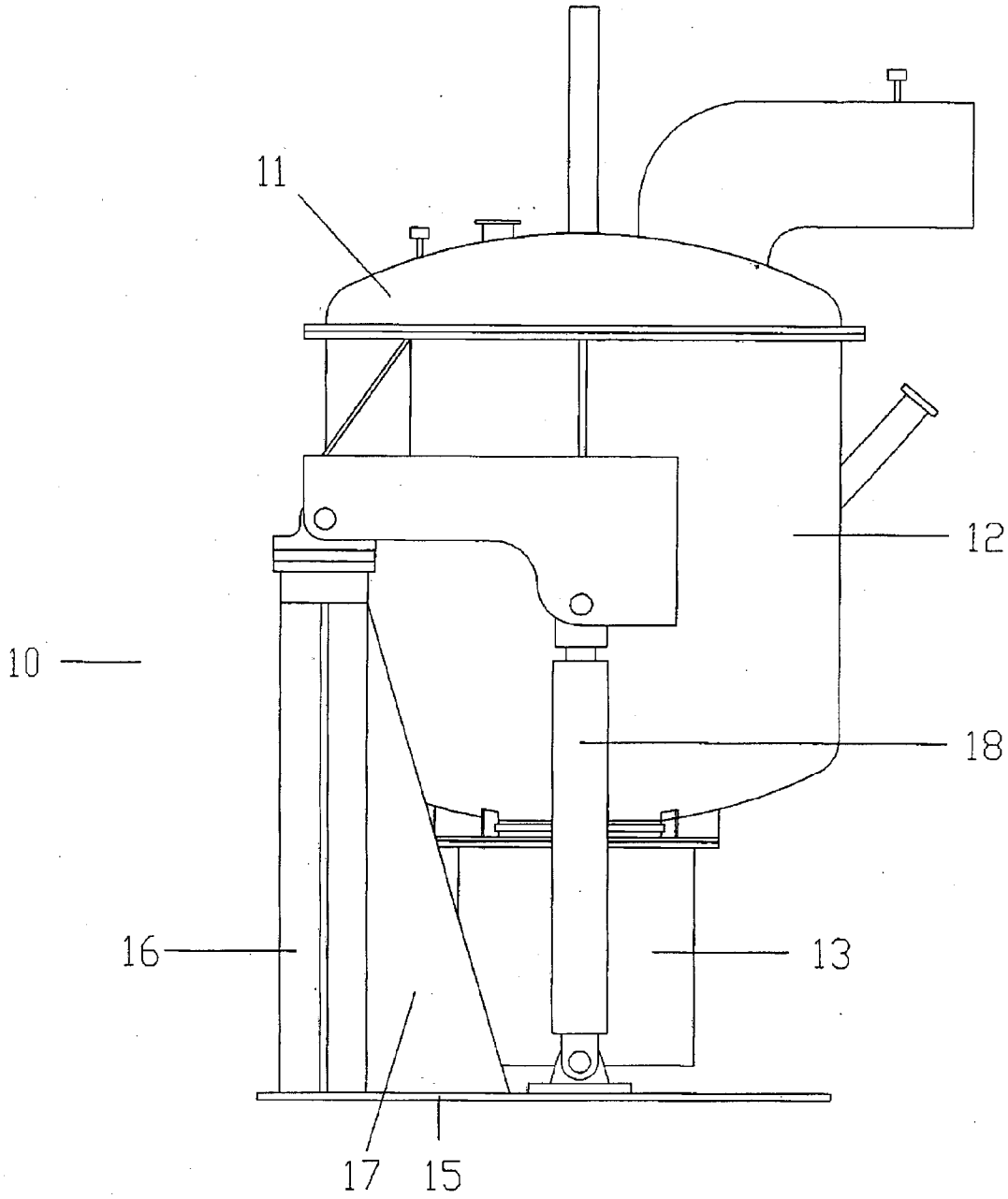

Fig. 2

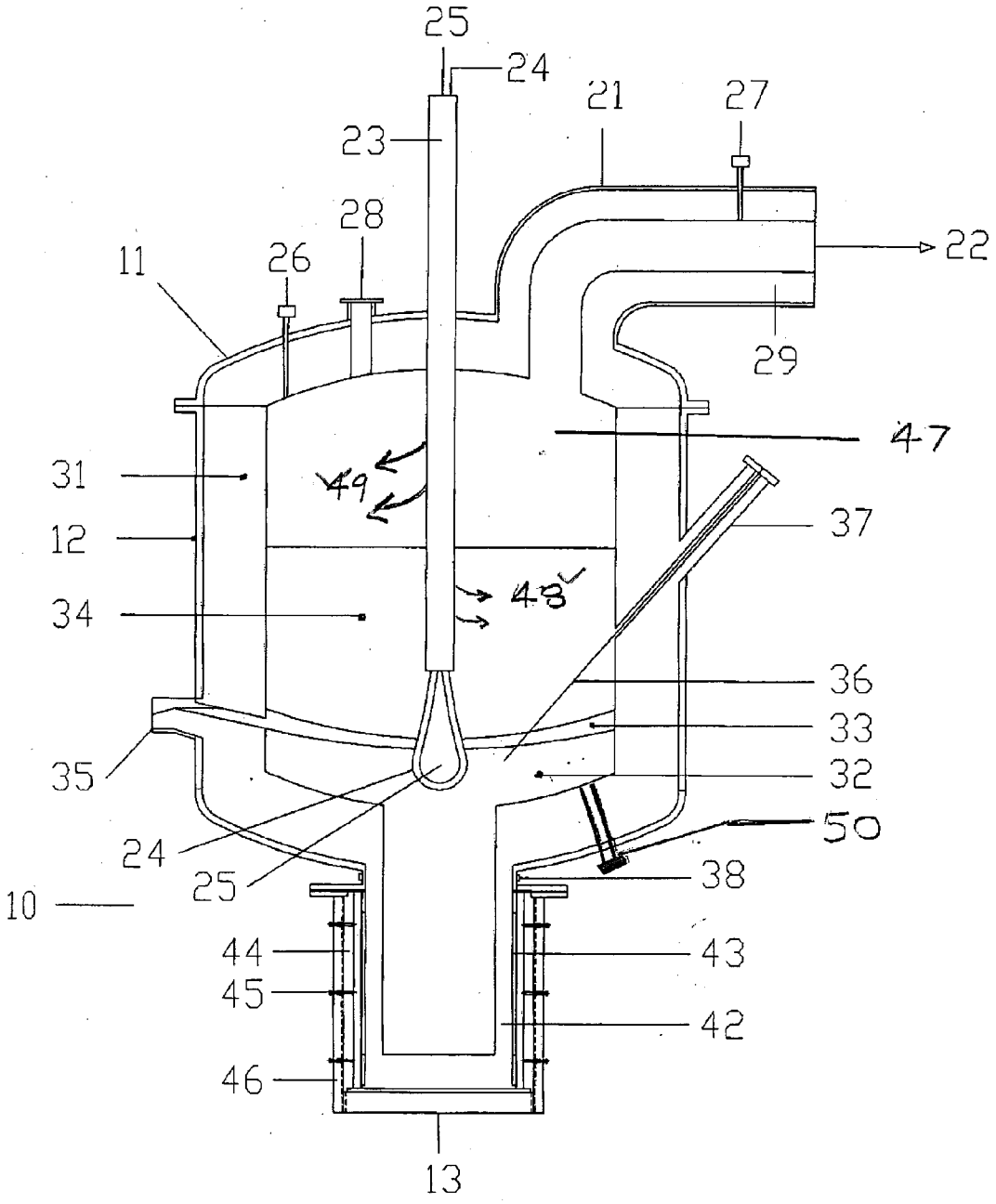
25
24
21
27
23
28
22
11
26
29
47
31
49
37
12
48
34
36
33
35
32
50
24
25
38
10
44
43
45
42
46
13

Fig. 3

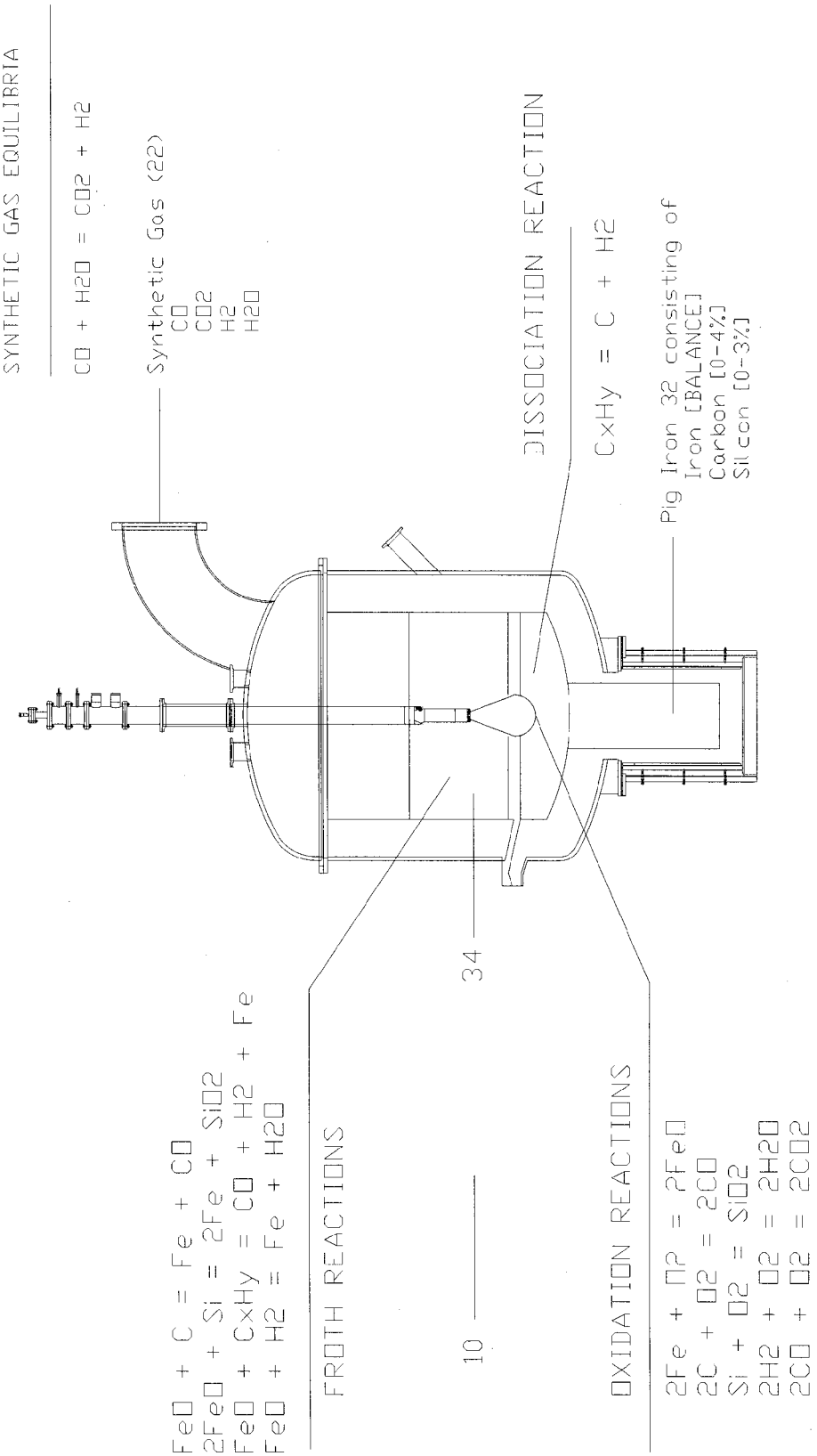
SYNTHETIC GAS EQUILIBRIA
CO + H2O = CO2 + H2
Synthetic Gas (22)
CO
CO2
H2
H2O
DISSOCIATION REACTION
CxHy = C + H2
Pig Iron 32 consisting of
Iron [BALANCE]
Carbon [0-4%]
Silcon [0-3%]
34
10
FROTH REACTIONS
FeO + C = Fe + CO
2FeO + Si = 2Fe + SiO2
FeO + CxHy = CO + H2 + Fe
FeO + H2 = Fe + H2O
OXIDATION REACTIONS
2Fe + O2 = 2FeO
2C + O2 = 2CO
Si + O2 = SiO2
2H2 + O2 = 2H2O
2CO + O2 = 2CO2

Figure 4

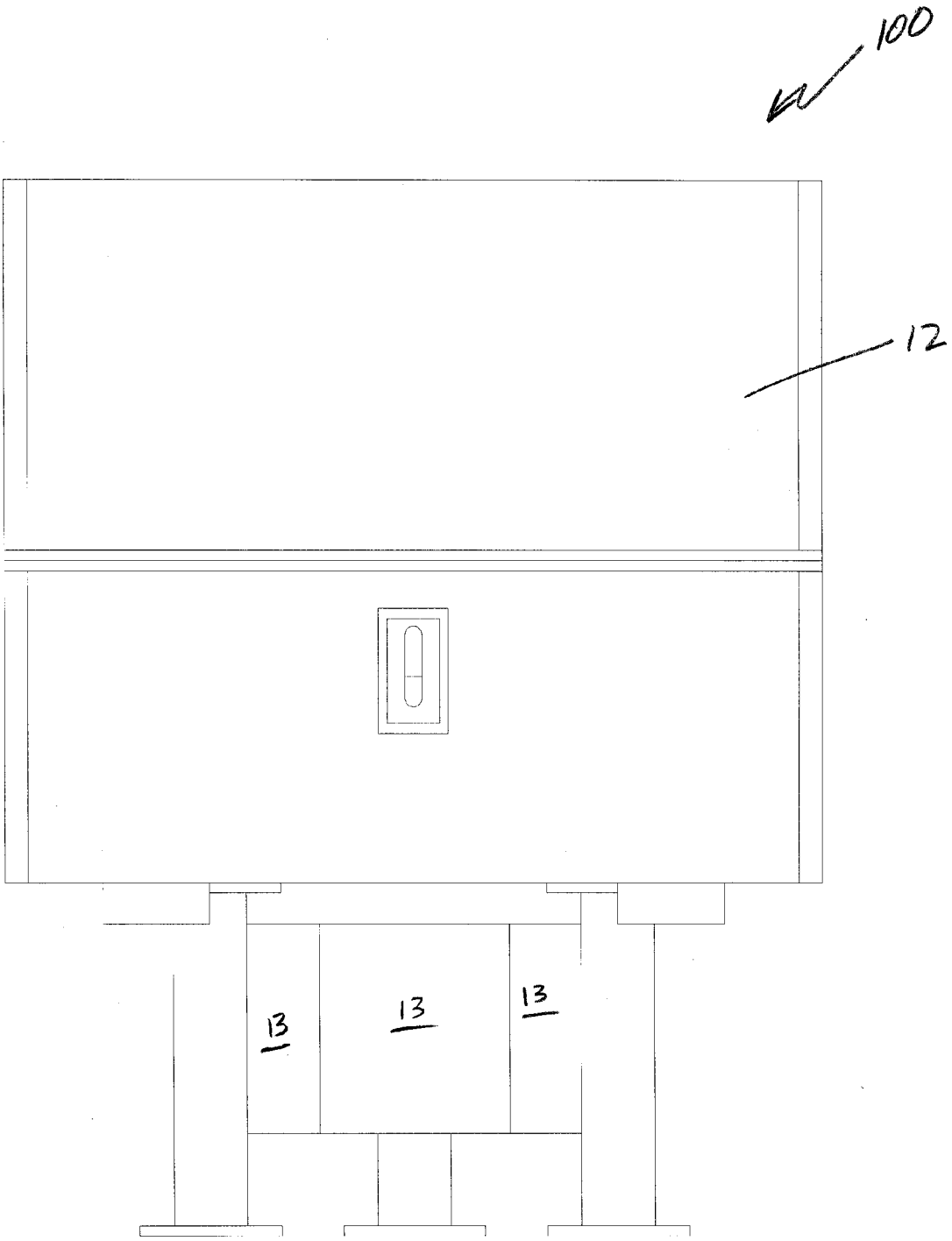

Figure 5. FRONT ELEVATION, 3 Inductor Configuration

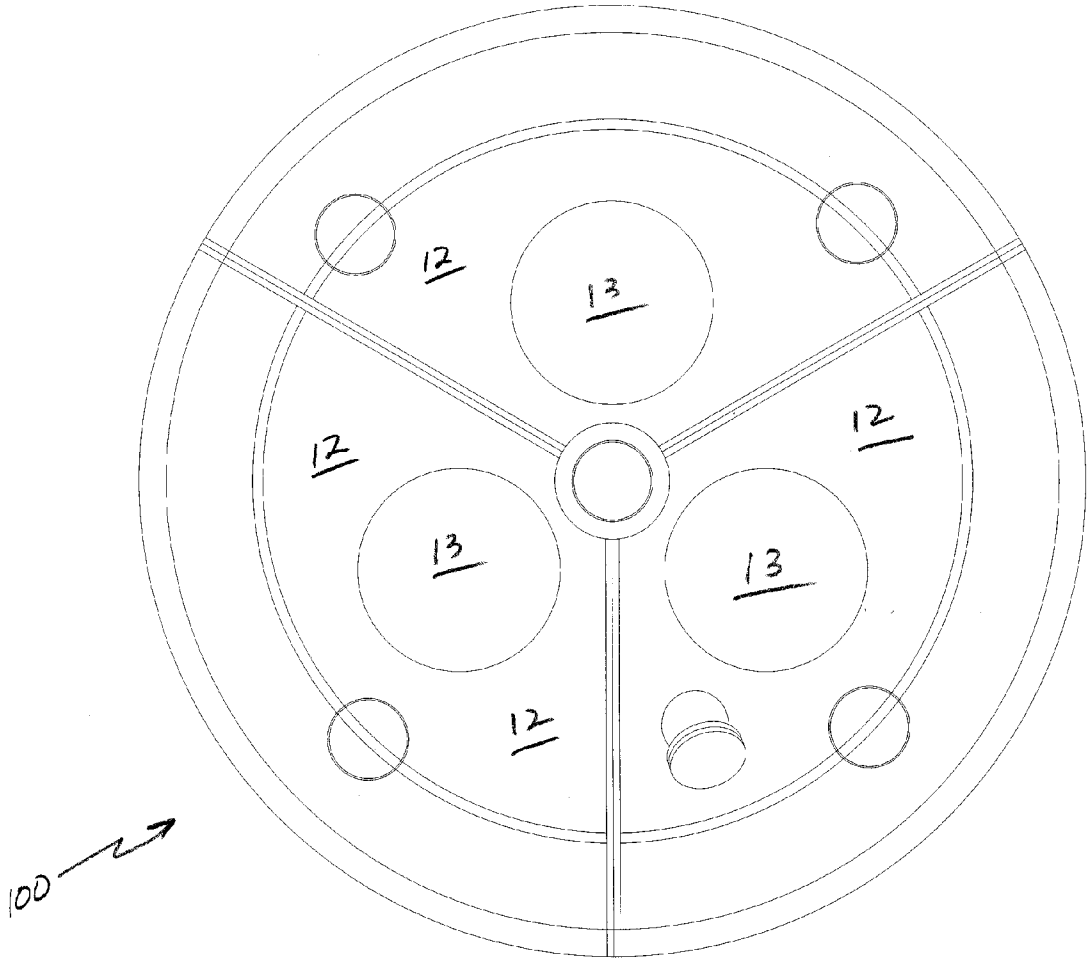

Figure 6. BOTTOM VIEW, 3 Inductor Configuration

METHOD FOR PRODUCING FUEL GAS

FIELD OF INVENTION

[0001] The present invention relates to a method for producing synthesis gas, and in particular to a method for producing a high quality synthesis gas from a widely varying feedstock of waste and natural fuels using a gasifier having a the reaction chamber mounted on top of and in fluid with communication with an induction furnace.

BACKGROUND OF INVENTION

[0002] Conventional gasification is a process that converts carbonaceous materials, such as coal, petroleum, petroleum coke or biomass, into carbon monoxide, hydrogen and carbon dioxide. In a conventional gasifier, the carbonaceous material undergoes three processes including pyrolysis, combustion and gasification. During the pyrolysis process, the carbonaceous material heats up, volatiles are released and char is produced. The process is dependent on the properties of the carbonaceous material and determines the structure and composition of the char, which will then undergo gasification reactions. The combustion process occurs as the volatile products and some of the char reacts with oxygen to form carbon dioxide and carbon monoxide, which provides heat for the subsequent gasification reactions. The gasification process occurs as the char reacts with carbon dioxide and steam to produce carbon monoxide and hydrogen. The resulting gas is called syngas. Syngas is typically combusted in a gas turbine, and the heat is used to produce steam to drive a steam turbine.

[0003] There are four basic types of gasifiers operating today including fixed bed systems, fluidized bed systems, entrained flow systems and molten bed systems. In a fixed bed reactor, a reactive gas or gases are passed through a fixed bed of feedstock in a co-current or counter current flow. The fixed bed consists of carbonaceous fuel (e.g. coal or biomass) through which a "gasification agent" (steam, oxygen and/or air) flows in a co-current or counter-current configuration. The ash is either removed dry or as a slag. The nature of a fixed bed gasifier means that the fuel must have high mechanical strength and must be non-caking so that it will form a permeable bed. Thus, certain feedstocks such as processed municipal solid waste, biosolids, ground coal and certain types of biomass are not suited for use in fixed bed reactors. This is particularly true when moisture is present.

[0004] In a fluidized bed reactor, the pressure drop of the gasifying reactants is adjusted so that the feedstock is lifted or suspended by the gaseous phase. In particular, the carbonaceous fuel is fluidized in oxygen (or air) and steam. The ash is removed dry or as heavy agglomerates that defluidize. The temperatures are relatively low in dry ash gasifiers, so the fuel must be highly reactive; low-grade coals are particularly suitable. Fluidized bed gasifiers are most useful for fuels that form highly corrosive ash that would damage the walls of slagging gasifiers. Biomass fuels generally contain high levels of corrosive ash.

[0005] In an entrained bed reactor the solid particulate feedstock are carried or "entrained" through the reactor by the reacting gases. In particular, a dry pulverized solid, an atomized liquid carbonaceous fuel or a fuel slurry is gasified with oxygen in co-current flow. The gasification reactions take place in a dense cloud of very fine particles. Most coals are suitable for this type of gasifier because of the high operating temperatures and because the coal particles are well separated from one another. The fuel particles must be much smaller than for other types of gasifiers. This means the fuel must be pulverized, which requires somewhat more energy than for the other types of gasifiers. It also means that feedstocks such as processed municipal solid waste, certain biomass, spent tires and several types of industrial wastes are not well suited for this type of gasifier.

[0006] In a molten bed reactor higher heat value feedstock (primarily coal) is injected into a molten bath of iron, salt or coal ash contained within a reactor. A reactive gas such as oxygen, steam and/or carbon dioxide is injected into the vessel to control the rate of reaction within the reactor. A shortcoming of current molten bed gasifiers is the inability to process low heat value feedstocks and thus widely varying feedstocks. Often this is because low heat value feedstocks such as municipal solid waste, certain biomass wastes and some household and industrial wastes, when introduced into a molten bath can consume rather than produce heat thus limiting the efficiency of the reactor and possibly endangering the continuity of the process itself.

[0007] An exemplary molten bed reactor is described in U.S. Pat. No. 4,649,867 including a substantially cylindrical vessel which has a substantially oblong section and lateral walls and a bottom wall which are lined with a refractory lining. An orifice for discharging the bath of liquid metal and an orifice for discharging slag supernatant on the bath of liquid metal are provided. In addition, a dome is positioned in a sealed manner on the vessel having in its upper part in the vicinity of one of the ends of the vessel a sealed box for introducing an injecting branch. An orifice is provided in the upper part of the vessel for exhausting the gases produced. A roughly central orifice for introducing additional elements is also provided in the upper part.

[0008] Another exemplary molten bed reactor is described in U.S. Pat. No. 4,865,626. This patent discloses a process for producing gas containing carbon monoxide and hydrogen gas including introducing lump coal by means of a down pipe and one or more inlets in a gasifier head into a gasifier having a fluidized bed region and a free board space or killing region. The coal passes through the killing region into the fluidized bed region and is gasified therein with the aid of oxygen or oxygen-containing gas supplied from an oxygen source and blown into a region below the fluidized bed region. When the coal passes through the free board space it is spontaneously dried and degassed in an endothermic reaction that results in a temperature drop in the free board space and ensures that only coal constituents bringing about a high gasification temperature enter the lower part of the fluidized bed region.

SUMMARY OF THE INVENTION

[0009] The motivating object of the present invention was the need for a superior waste to energy conversion process allowing for increased fuel flexibility. Specifically, for this invention, the goal is to efficiently and economically produce a high quality synthesis gas from low heat value, widely varying feedstock. Such feedstock can include waste materials contaminated with inorganics as well as low grade natural fuels and industrial by-products. The resulting synthesis gas is of sufficient quality to allow production of electrical power, refining of Fischer-Tropsch liquids, production of methanol or the separation of industrial grade hydrogen. In addition, the present invention provides for improved environmental impact and clean and more environmentally friendly energy

production while improving upon current industrial conversion efficiencies. Further, the present invention provides a major new source of energy from material that is currently considered useless, hazardous or not worth harvesting.

[0010] By fuel flexibility it is meant that the gasifier of the present invention is capable of handling a broad range of wastes from municipal waste, medical waste, biomass to bio-solids, spent tires, and industrial/agriculture waste. This includes a wide range of natural fuels and waste fuels. Further, the gasifier of the present invention can process solids, liquids and gaseous feed streams simultaneously in a single reactor, as well as low heat value feed (3,800 BTU/lb) as raw material. Additionally, the gasifier can tolerate a large content of in-organics and contaminants in the carbonaceous feedstock.

[0011] By efficiency and economics it is meant that the gasifier exhibits a high thermal conversion efficiency of about 58% to about 65% while operating at ambient pressure, using no air and efficiently using oxygen. It also means that the gasifier can processes large quantities (up to 700 tons per day) of varying feedstock in a single reactor vessel. Further, the gasifier can maintain an exothermic reaction state, thus requiring minimal external heat assist, and generate high quality synthesis gas (250-350 BTU/scf) with a low particulate level.

[0012] By environmental impact it is meant that the gasifier produces no char, minimal ash, no tar, no oils, no phenols and no ammonia while producing useable by-products such as siliceous slag and pig iron. The gasifier can also efficiently and safely processes high sulfur and contaminated coal and several types of industrial and household hazardous waste. Further the gasifier can recycle and dissociate polluting exhaust gases and green house gases such as carbon dioxide, dioxins, furans, volatile organic gaseous compounds, nitrous oxides and the like.

[0013] In order to meet the objects of the invention there is provided a molten bed reactor or gasifier including reaction chamber, for the production and collection of a fuel gas, mounted on top of, in fluid communication with and removed from a furnace. Preferably, the furnace is an induction furnace, and more preferably a coreless induction furnace, although a channel induction furnace can be used. The purpose of the furnace is to provide the reaction chamber with a constant source of molten metal, maintain the molten metal at a desired temperature, especially when synthesis gas production within the reaction chamber becomes endothermic due to the presence of low heat value feed, and impart vertical stirring of the molten metal within the reaction chamber for providing efficient conversion of carbonaceous fuel to carbon monoxide and hydrogen gas. Until now, induction furnaces were used primarily for batch processes involving melting and alloying metals.

BRIEF DESCRIPTION OF DRAWINGS

[0014] FIG. **1** is a front elevational view of a gasifier in accordance with a preferred embodiment of the present invention.

[0015] FIG. **2** is a side elevational view of the gasifier of FIG. **1**.

[0016] FIG. **3** is a vertical sectional view of the gasifier of FIG. **1**.

[0017] FIG. **4** is a vertical sectional view of the gasifier of FIG. **1** showing the chemical reactions that take place within specific locations within the gasifier during gasification.

[0018] FIG. **5** is a front elevational view of a gasifier in accordance with another preferred embodiment of the present invention.

[0019] FIG. **6** is a bottom plan view the gasifier of FIG. **5**.

DETAILED DESCRIPTION OF THE DRAWINGS

[0020] FIGS. **1** through **4** illustrate a gasifier **10** in accordance with a preferred embodiment of the present invention. FIGS. **5** and **6** illustrate a gasifier **100** in accordance with another preferred embodiment of the present invention. Like portions of gasifier **10** share like numbering with gasifier **100**.

[0021] The present invention is directed to an integrated, multi-stage gasification system designed to maximize the production of synthesis gas from a widely ranging continuous feed stream of both organic and inorganic material. Specifically, seven distinct hardware sections are integrated into a continuous, interactive process designed to gasify solid, liquid and gaseous hydrocarbon material simultaneously. This is done in the presence of inorganic material which would otherwise disrupt a normal gasification process. The feed stream material includes, but is not limited to the mixed waste and natural fuels material of Table 1.

TABLE 1

SOLIDS		LIQUIDS		GASES	
Raw Waste Material	Process By-Products	Raw Waste Material	Process By-Products	Raw Waste Material	Process By-Products
Municipal Solid Waste (MSW)	Waxes	Paints	Waxes	Landfill Gas	Light Propane Gas (Refineries)
Medical Waste	Glycerins	Vegetable Oil	Glycerins	Sewage Gas	Carbon Dioxide
Household Hazardous Waste (HHW)	Contaminated Carbon	Mineral Oil	Petro-Chemicals	Contaminated Water Vapor	Coke Oven Gas
Spent Tires	Contaminated Filters	Contaminated Fuels	Bottom Oil	Hydrogen Sulfide	Digester Gas
Biomass	Petroleum Coke	Industrial Solvents	Contaminated Fuels		
Bio-solids	Construction Materials	HHW	Gasifier Oils		

TABLE 1-continued

SOLIDS		LIQUIDS		GASES	
Raw Waste Material	Process By-Products	Raw Waste Material	Process By-Products	Raw Waste Material	Process By-Products
Low Sulfur Coal	Tars		Poly Chlorinated Butylenes		
Brown Coal	Asphalt				
High Sulfur Coal	Agricultural Waste				

[0022] Each hardware section, or process stage, is designed to accommodate a specific group of feed stream constituents. The arrangement and design of these hardware sections is based upon generating maximum quantities of quality synthesis gas at minimum operational cost. Depending upon the combination of material to be gasified, the best section of the gasifier is selected for material feed in accordance with maintaining the balanced combination of hydrocarbons, carbonaceous materials and reaction gases. This allows control of the overall process as an exothermic reaction, resulting in maximum generation of synthesis gas for minimum expenditure of energy.

[0023] The following description of the preferred embodiments is merely exemplary in nature and is not intended to limit the invention, its application or uses.

[0024] In FIGS. **1** and **2** there is shown a front elevation of a gasifier **10**, which consists of a refractory lined lid **11**, an expanded diameter, increased height reaction vessel **12**, an induction furnace **13** mounted below and integral with the reaction vessel **12** and a tilt frame **14**. Tilt frame **14** consists of a base plate **15**, two vertical columns **16**, gussets **17** and two hydraulic cylinders **18** to tilt gasifier **10** for maintenance.

[0025] As illustrated in FIG. **3**, refractory lined lid **11** is fitted with an exhaust plenum **21** to remove the synthesis gas **22**, one or more top lances **23** to introduce oxygen, carbon dioxide, steam, other gases or liquids **24** and solid material feed **25** into the gasifier, one or more devices to measure the temperature **26** in the gasifier, one or more devices to measure the gas composition **27** and a burner port **28** to house a burner for preheating the gasifier. Exhaust plenum **21** includes a refractory lining **29** for preventing heat loss therethrough.

[0026] Reaction vessel **12** is fitted with a refractory lining **31** to contain a molten metal **32**, a slag **33**, a froth **34** and a off-take region **47**. Excess slag **33** is continuously removed from the vessel by means of a siphon stagger **35**. The solid material feed **25** is introduced from above by means of one or more top lances **23** through lid **11** or through exhaust plenum **21** and lid **11**. Solid, liquid or gaseous feed **36** is also introduced by means of one or more side wall injectors **37**. Gaseous and liquid feed can also be introduced into froth **34** or off-take region **47** utilizing injector ports located along the side walls of top injection lances **23**. On the side walls of top lances **23**, one or more side wall ports **48** located in froth **34** and one or more side wall ports **49** located in off-take region **47** can be effectively utilized due to the expanded diameter and increased height (freeboard) of reaction vessel **12**. The bottom of reaction vessel **12** is fitted with a water cooled flange **38** to which furnace **13** is attached. One or more bottom injector lances **50** can also be utilized to enhance the mixing action and gasification process from below, again due to the expanded diameter of reaction vessel **12**. Solids, liquids or gases may also be introduced through bottom injector lances **50**.

[0027] Preferably, furnace **13** is a coreless induction furnace. The heart of a coreless induction furnace is the coil, which consists of a hollow section of heavy duty, high conductivity copper tubing which is wound into a helical coil. Coil shape is contained within a steel shell and magnetic shielding is used to prevent heating of the supporting shell. To protect it from overheating, the coil is water-cooled, the water being re-circulated and cooled in a cooling tower or chiller.

[0028] A channel induction furnace can also be used. Channel furnaces however consist of a refractory lined steel shell which contains the molten metal. Attached to the steel shell and connected by a throat is an induction unit which forms the melting component of the furnace. The induction unit consists of an iron core in the form of a ring around which a primary induction coil is wound. This assembly forms a simple transformer in which the molten metal loops comprise the secondary component. The heat generated within the loop causes the metal to circulate into the main well of the furnace. The circulation of the molten metal effects a useful stirring action in the melt. Channel furnaces however suffer the drawback of requiring an initial molten metal charge from another source for cold start. In addition, for normal operation, the feed rate of the carbonaceous material and reaction gases is balanced so that the molten iron retains its high carbon content. This allows operation in the optimum portion of the Fe—C Equilibrium Chart. If this balance should be temporarily lost, and the carbon is depleted from the molten iron, then steel will be made in the bath. This would require a notable increase in temperature to maintain the molten state of the metal while high purity carbon is injected back into the bath to restore the iron. This additional heat requirement would severely strain most channel furnaces. In many cases the channel furnace would have to be shutdown and recharged from a cold start. There is no such problem with a coreless induction furnace which could maintain the required higher temperatures. This ability to sustain continuous operation in the presence of highly varying reactions and feed streams is critical to the overall efficiency and economics of the process. Finally, channel furnaces require additional molten iron depth in order to avoid oxide build up or clogging in the refractory channels. This additional iron is not conducive to the basic gasification reaction efficiency. Therefore, coreless induction furnaces provide a preferred flexibility and adaptability not found in channel furnaces.

[0029] A second embodiment of this design is shown in FIGS. **5** and **6**. This configuration utilizes three induction furnaces **13** on a larger reaction vessel **12** to facilitate a larger

molten bath to enable higher capacity material throughputs. Variations in this approach can accommodate 2 or up to 6 induction furnaces **13** for a single reaction vessel **12**. The use of multiple induction furnaces **13** for larger reaction vessels **12** allows uniform stirring action and heat distribution, thus enhancing the synthesis gas reaction and avoiding cold spots in the larger molten metal volume. Further, since induction furnaces are single phase devices, each inductor can be connected to one of the three phases of a standard three phase industrial power supply. Thus, use of a phase balancer can be eliminated. As a result, this approach also saves equipment costs while increasing electrical efficiency. In addition, this larger reaction vessel **12** does not utilize a tilt frame for emptying and maintenance, but rather uses a series of tap holes to save on cost and complexity of design. Excess slag during operation is still removed by a siphon slagger.

[0030] The purpose of induction furnace **13** is to initially melt the solid pig iron and to subsequently stir molten metal **32** during operation. Induction furnace **13** is fitted with a refractory lining **42** which contains molten metal **32**. Surrounding refractory lining **42** is a coil **43** which is supported by magnetic shunts **44** which are supported by shunt bolts **45** which fasten to a furnace cage **46**.

[0031] The manner in which gasifier **10** is started is as follows. Once gasifier **10** has been charged with solid pig iron, reaction vessel **12** is preheated to about 2200° F. by means of a gas burner inserted through burner port **28** or alternately through a top mounted port for a lance **23**. Electrical power is then applied to induction furnace **13** which melts and superheats molten metal **32** to about 2700° F. The frequencies used for induction melting vary from 50 cycles per second to 10,000 cycles per second. The higher the operating frequency, the greater the maximum amount of power that can be applied to induction furnace **13** and the lower the amount of turbulence induced.

[0032] When the charge material is molten, the interaction of the magnetic field and the electrical currents flowing in induction coil **43** produce a stirring action within molten metal **32**. This stirring action forces molten metal **32** to rise upwards into reaction vessel **12**. The degree of stirring action is influenced by the power and frequency applied as well as the size and shape of coil **43** and the density and viscosity of molten metal **32**. The stirring action within the molten metal bath is important as it helps with mixing of molten metal **32** as well as homogenizing of temperature throughout induction furnace **13** and reaction vessel **12**.

[0033] FIG. **4** illustrates a cross section of a gasifier **10** showing the chemical reactions that take place therein. Oxygen is introduced into molten metal **32** by means of one or more oxygen lances **23**. As the oxygen impinges on molten metal **32**, which initially consisted of iron, carbon and silicon, the oxygen initially oxidizes the iron to iron oxide as follows:

$$2Fe+O_2=>2FeO \quad (1)$$

The silicon dissolved in molten metal **32** is then oxidized to silicon dioxide as follows:

$$Si+2FeO=>SiO2+2Fe \quad (2)$$

Likewise, the carbon dissolved in molten metal **32** is then oxidized to carbon monoxide as follows:

$$C+FeO=>CO+Fe \quad (3)$$

The oxidation of the iron to iron oxide and silicon to silicon dioxide involves minimal volumetric change. However, as the carbon is oxidized to carbon monoxide, there is a significant increase in volume when a solid is oxidized to a gas. This volumetric expansion causes molten metal **32**, the liquid iron oxide, the liquid silicon dioxide and slag **33** to form froth **34**.

[0034] If the carbon is not replenished, the oxygen will remove virtually all of the carbon in molten metal **32** in about fifteen minutes. Thereafter, froth **34** will collapse and the iron will be completely oxidized to iron oxide. To maintain froth **34** and molten metal **32**, the carbon must be injected at a rate equal to the rate at which the carbon is being removed by oxidation, as follows:

$$FeO+C=>CO+Fe \quad (4)$$

This insures that the iron that was oxidized to iron oxide is then subsequently reduced by the carbon returning most of the iron to molten metal **32** so that it can subsequently be re-oxidized thereby allowing the cycle to repeat indefinitely. This continuous recycling is important to the efficiency of the process. Since some of the iron oxide will be carried out of reactor vessel **12** as part of slag **33**, there will be a depletion of molten metal **32**. Consequently, the iron will have to be added to reactor vessel **12** to maintain the required level of molten metal **32** in the gasifier.

[0035] As solid feed **25** is injected into molten metal **32**, some of it will dissociate into the carbon and hydrogen and some will remain as a hydrocarbon. Likewise, as liquid or gaseous feed **36** is injected into froth **34**, slag **33** or molten metal **32**, some of it will dissociate into carbon and hydrogen and some will remain as a hydrocarbon. That portion of feeds **25** and **36** that dissociates will cause molten metal **32** to froth as the hydrogen is released as a gas. To dissociate feeds **25** and **36**, heat must be provided, as follows:

$$\text{Feeds (25 and 36)+heat}=>C+H_2 \quad (5)$$

Likewise, that portion of feeds **25** and **36** that is oxidized to carbon monoxide, carbon dioxide and water vapor by the oxygen will cause molten metal **32** to froth.

$$\text{Feeds (25 and 36)+Oxygen}=>\text{Synthesis Gas} \quad (6)$$

$$2C+2H_2+2O_2=>CO+CO_2+H_2+H_2O+\text{Heat} \quad (6a)$$

The frothing process is most important since it increases the surface area for the following reaction.

$$\text{Feeds (25 and 36)+Iron Oxide}=>\text{Synthesis Gas} \quad (7)$$

$$2C+2H_2+4FeO=>CO+CO_2+H_2+H_2O+4Fe+\text{Heat} \quad (7a)$$

[0036] The amount of oxygen added is closely controlled so that the heat released will provide the heat to dissociate feeds **25** and **36** and provide the heat required to elevate the synthesis gas to a temperature high enough to keep froth **34**, slag **33** and metal **32** molten. The operating temperature will be in the range of 2700-3000° F.

[0037] The resulting synthesis gas consists of carbon monoxide, carbon dioxide, hydrogen and water vapor. The ratio of the products in the synthesis gas is controlled by the following equilibrium:

$$CO+H_2O=CO_2+H_2 \quad (8)$$

The equilibrium constant for equation 7 is equal to:

$$k=[pCO_2\times pH_2]\div[pCO\times pH_2O]=[6355\div(-R\times T]-[6.24\div(-R\times T)] \quad (9)$$

[0038] Where p=Pressure

[0039] R=Gas Constant

[0040] T=Temperature

Since the equilibrium constant k is temperature dependent, the percentage of each gas will vary with temperature. The higher the temperature the greater the amounts of carbon monoxide and water vapor. Conversely, the lower the temperature, the greater the amounts of carbon dioxide and hydrogen. The ratio of carbon compounds formed to the hydrogen compounds formed is directly proportional to the amount of carbon and hydrogen in feeds **25** and **36**.

[0041] Reaction vessel **12** is maintained under either a slightly negative, neutral or slightly positive pressure to remove the hot synthesis gas via exhaust plenum **21** while maintaining the proper reaction and diffusion of gases from molten metal **32** and slag **33**. Exhaust plenum **21** is refractory lined **29** since the synthesis gas exits at temperatures as high as 2700 to 3000° F.

[0042] Because feeds **25** and **36** contain some metallic elements, they oxidize and become part of slag **33** or molten metal **32**. When these metal oxides cause slag **33** to go basic, silica sand can be added to keep slag **33** fluid. Conversely, when these metal oxides cause slag **33** to go acidic, dolomitic limestone can be added to lower the melting point of slag **33** to keep it fluid. It should be noted that slag chemistry in this process is important as it relates to the viscosity of slag **33** and the necessity of controlling the continuity of the synthesis gas production. In addition, just as in a metal refining process, the chemistry of slag **33** is related to the removal of detrimental impurities. In the synthesis gas production, it is advantageous to keep any impurities, such as sulfur and phosphorous, in metal bath **32** or capture these impurities in slag layer **33** rather than having to remove them from the gas stream in some later step. The slag chemistry is monitored by periodic sampling and computer control. Siphon type stagger **35** is employed to continuously remove excess slag **33**. Most heavy metals, if present in the feed stream, can also be captured by the molten metal or slag regimes.

[0043] The following paragraphs now explain important features of each major hardware section.

Induction Furnace

[0044] Induction furnace **13** is integral with but separated from the elevated and expanded diameter reaction vessel **12** and provides the following key features:

[0045] i) Precisely controlled vertical stirring of the entire molten bed with minimal power consumption. This facilitates circulation of all molten metal **32** with no dead or cold spots thus enabling maximum utilization of all the iron in the gasification process.

[0046] ii) Power variability in real time to accommodate changes in feed stream heat value and thermal conversion process interaction.

[0047] iii) Control of vertical stirring turbulence and speed during the volatile thermal conversion reactions.

[0048] iv) Induction coil **43** protection from volatile reaction vessel **12** molten metal stirring and gasification process by isolation of induction furnace **13** below the primary thermodynamic reactions.

[0049] v) Adaptable to real time re-charging of the molten metal if the carbon content drops too low.

[0050] vi) Continuous operation with varying feed stream conditions and gasification conditions

[0051] Vertical stirring at minimum power is accomplished by the natural movement of metal bath **32** caused by induction coil **43**. Control of power variability is achieved by means of a tapped transformer to vary the voltage to coil **43**. By mounting elevated, extended diameter reaction vessel **12** on top of induction furnace **13**, induction coil **43** and refractory lining **42** are isolated and thus protected from the volatile reactions of the gasification process. The superstructure of induction furnace **13** is specifically configured to support the weight of molten metal **32** and slag **33** in reaction vessel **12**.

Elevated and Extended Diameter Reaction Vessel

[0052] Reactor vessel **12**, or reaction chamber, is an elevated and extended diameter molten metal reaction section capable of sustaining efficient and stable FeO reaction during the injection of widely varying hydrocarbon material feeds. The extended bed diameter provides enlarged molten metal surface area and thus greater reaction zone potential. With greater surface area, it is also possible to inject multiple feed stream types and multiple process reactants requiring separate injector lance systems **23**. This greatly enhances the flexibility of the system to tolerate the widely varying feed stream characteristics.

[0053] The bottom portion of elevated and extended diameter reaction vessel **12** is a designed curved member. This curved member is capable of supporting the weight of molten metal **32**, slag **33**, refractory lining **31**, the vertical portion of reaction vessel **12**, lid **11**, exhaust plenum **21** and injection lances **23** while providing superior molten metal flow characteristics. Larger diameter reaction vessels requiring multiple induction furnaces, as shown in FIGS. **5** and **6**, can be equipped with square, reinforced bottom sections to allow more uniform metal depth distribution and reduced equipment cost.

[0054] Reaction vessel **12** can be increased in vertical capacity by adding sections between the reaction vessel **12** and lid **11** interface. This allows an easy, cost-effective increase of iron capacity and froth region **34** volume for changes in feed stream composition and quantity. This design flexibility, coupled with the broad surface area permits extensive control and use of the iron-carbon and oxygen reaction to maintain the exothermic reaction and carbon exchange without depleting the net carbon content of molten metal **32**. Top lance **23** and side injection lances **37** are provided in the integrated design to accomplish this flexibility of operation by simple modifications to reaction vessel **12** design.

[0055] Refractory and insulation material for lining **31** of reaction vessel **12** is specifically selected to accommodate the volatile FeO reaction, Fe-Carbon exchange and the incumbent splashing and spalling which occurs. This material is also used to assure minimal heat loss. This refractory incorporates basic materials such as magnesia and silica in areas in contact with the metal bath and in proximity of the slag line. Above the slag line, where the refractory may be subject to acid, neutral, or even slightly basic conditions, a neutral refractory such as alumina or chromia-alumina spinel would be more appropriate. In off-take region **47** and duct areas, where temperatures will be more moderate, emphasis is placed on abrasion resistance to counteract the effect of any carry-over particulate combined with high gas stream velocity. The sidewall is brick while the bottom refractory is a monolithic. The refractory is installed by means of a staggered joint configuration. The expanded diameter of the reaction vessel **12** allows:

[0056] i) Variable feed stream injection from multiple top injector lances **23**.

[0057] ii) Multiple (typically 3-6) side lance **37** injection ports to facilitate liquid solid and gaseous feed injection in a variety of configurations.

[0058] iii) Multiple side lance **37** injection ports to facilitate stirring action in the horizontal plane of the molten bed, thus enhancing total reaction mixing.

[0059] iv) Varying injection speeds due to multiple locations to enhance and control the size and depth of the molten metal reaction zone.

[0060] v) Isolation of the total reaction zone in a controllable region.

[0061] vi) Increased capability to operate in the required region of the Fe—C equilibrium chart for widely varying feed.

Slag Region

[0062] The silica slag region is purposely provided in special combinations which:

[0063] i) Captures and further gasifies carbon particulates escaping the FeO-Iron-Carbon reaction.

[0064] ii) Captures and neutralizes certain waste gases not productive in the synthesis gas generation process.

[0065] iii) Captures and neutralizes other non-carbon particulates.

[0066] iv) Enhances the formation of the appropriate secondary froth reaction zone constituents to support a second synthesis gas production area.

[0067] v) Coats the surrounding refractory with a protective layer as a result of splashing from the volatile gasification reaction.

[0068] vi) Provides refractory design transition from molten metal to freeboard areas of gasifying reaction vessel.

Secondary Reaction Froth Region

[0069] This section provides a volume large enough to allow control of secondary gasification reaction. Directly above molten metal **32** and slag **33** regions, froth region **34** is typically three to fifteen times the depth of the molten metal section, depending upon the type of mixed feed stream material involved. As previously discussed, during the injection of hydrocarbon material and oxygen into molten metal **32**, it is common to experience a frothing or fine material expansion above molten metal **32** and slag section **33**. The purpose of froth region **34** is to provide sufficient surface area and height, with the incumbent expanded injection location capability, to create a controlled secondary gas reaction area which provides the following features:

[0070] i) Allows complete gasification of any hydrocarbon particulates not fully reacted in the molten metal **32** gasification section.

[0071] ii) Facilitates the introduction of additional hydrocarbon fines and reaction gases to allow additional gasification reaction and boost synthesis gas production. These fines can include coal, spent tires, waxes, waste oils, industrial waste chemicals, and bio-solids.

[0072] iii) Provides a large transition area for changes in refractory design and thickness.

[0073] iv) Allows for an extended siliceous slag **33** area and "controlled extended" splash zone thus enhancing refractory coating and synthesis gas production in a continuous process.

[0074] v) Allows for thicker slag area to accommodate additional slag chemicals for improved synthesis gas filtration and increased residence time.

[0075] vi) Permits secondary injection of by-products and waste gases (see Table 1) to accelerate and expand synthesis gas formation.

[0076] vii) Permits secondary injection of gaseous reactants such as oxygen, CO_2 or water vapor to control and enhance temperature levels and H_2 and CO formation.

Expandable Off-Take Zone

[0077] Off-take zone **47** is specifically provided to allow control of the height and intensity of froth region **34** and provide a stable transition of the expanding synthesis gas into lid **11** and exhaust plenum **21**. For some feed stream conditions, the height and extent of froth region **34** can grow too rapidly and interfere with the controlled synthesis gas production and transition into lid **11** and plenum **21** sections. Therefore off-take zone **47** is provided to allow injection of pure light gases, oxygen, carbon dioxide, or water vapor to create a hot spot (or cold spot) which will place a controlled cap or limiter to the upper extent of froth region **34**. Care must be taken not to inject too much oxygen or carbon/hydrocarbon material into off-take zone **47**, resulting in excessive depletion of froth zone **34**. As a result, injection into off-take zone **47** is often an intermittent process, occurring only long enough to keep froth **34** out of exhaust plenum **21**. This "capping" or stopping of froth region **34** vertical expansion is important to the overall efficiency and control of the gasification process. This area is topped by a flanged connection to lid **11** which allows design expansion of froth region **34** and off-take region **47** due to changes in the feed stream characteristics or quantity, as well as changes in the thermal conversion process. This is accomplished simply by the addition of one or more refractory lined circular sections between off-take region **47** and lid **11**. Off-take region **47** also provides an additional "pure injection" zone for certain gaseous materials available from waste by-products, landfills, Fischer Tropsch by-products and digesters as outlined in Table 1.

Lid

[0078] Lid section **11** is designed to:

[0079] i) Retain the maximum amount of heat in reaction vessel **12**.

[0080] ii) Converge escaping hot synthesis gas flow efficiently to the exhaust plenum **21**.

[0081] iii) Provide first level instrumentation of quality and status of product gases.

[0082] iv) Resist erosion wear for particulates and high velocity gas flow.

[0083] Lid **11** has a designed curvature which maximizes the stability of high thermal insulating refractory installation while minimizing surface flow tension and erosion characteristics. The specially selected refractory material is designed to minimize heat loss for reduced thickness. This facilitates maximum inside diameter and minimum exterior (outside) hole-size for exhaust plenum **21**.

Exhaust Plenum

[0084] Exhaust plenum **21** is designed to provide:

[0085] i) Maximum heat retention.

[0086] ii) Minimum surface tension erosion characteristics.

[0087] iii) Minimum outside diameter.

[0088] iv) Efficient gas turning with minimum inside diameter (ID).

[0089] v) Proper gas escape velocity.

[0090] vi) Minimum collection of particulates and contaminants in the turn section and downstream areas.

[0091] vii) Proper reaction vessel pressure.

These features provide a combined aerodynamic, thermodynamic gas flow, characteristics needed to maximize gasification efficiency and control. Advanced state-of-the-art thermal insulating materials are used to extend life and maximize heat retention.

[0092] The preferred embodiments of the present invention can process and gasify a large array of mixed wastes and fuels from domestic and industrial applications. These wastes and fuels can be contaminated with a variety of in-organics and hazardous materials. Thus, the present invention allows for versatility and adaptability of design to accommodate a variation of organic and in-organic material and still achieve high efficiency in synthesis gas production. However, this same versatility and adaptability of design implementation can be very useful in other applications and embodiments.

1. A method of gasifying a carbonaceous fuel comprising,

providing a reaction chamber coupled to an induction furnace,

introducing the carbonaceous fuel into a molten metal contained within the reaction chamber, and

collecting a fuel gas generated within the reaction chamber.

2. The method according to claim **1** wherein the induction furnace is a coreless induction furnace.

3. The method according to claim **1** wherein the reaction chamber is mounted on top of the induction furnace.

4. The method according to claim **1** further comprising circulating the molten metal between the reaction chamber and the induction furnace though an opening in a bottom of the reaction chamber.

5. The method according to claim **1** further comprising heating the molten metal by induction heating.

6. The method according to claim **1** wherein the carbonaceous fuel is selected from the group consisting of municipal solid waste, medical waste, household hazardous waste, spent tires, biomass, bio-solids, industrial wastes, various grades of coal, coke and combinations thereof

7. The method according to claim **1** wherein the carbonaceous fuel is introduced into a froth zone and into an off take zone, each of the froth zone and the take- off zone being within the reaction chamber and directly above the molten metal.

8. The method according to claim **1** wherein the method is a continuous process.

9. A method of producing a fuel gas comprising,

introducing a carbonaceous fuel into a molten metal bath supported above an induction furnace,

heating the molten metal bath using the induction furnace,

generating the fuel gas, and

collecting the fuel gas.

10. The method according to claim **9** wherein the molten metal bath is contained within a reaction chamber mounted on top of the induction furnace, the reaction chamber having an opening through a bottom thereof that is in fluid communication with an interior of the induction furnace.

11. The method according to claim **10** wherein the bottom has an inside working circumference that is at least three times greater than an inside circumference of the interior of the induction furnace.

12. The method according to claim **10** wherein a coreless induction furnace is mounted to the bottom, the coreless induction furnace having an inside that is in fluid communication with a second opening through the bottom of the reaction chamber.

13. The method according to claim **9** further comprising stirring the molten metal bath using the induction furnace.

14. The method according to claim **9** further comprising obtaining a temperature of the molten metal bath, determining whether it is desired to add heat to the molten metal bath based upon the temperature of the molten metal bath, and adding heat to the molten metal bath using the induction furnace in a continuous process as needed.

15. The method according to claim **14** further comprising controlling a height of a froth derived from the molten metal bath by introducing a gas selected from the group consisting of combustible light gases, oxygen, carbon dioxide, steam and combinations thereof into an off take zone located above the molten metal bath.

16. The method according to claim **9** wherein, when the carbonaceous fuel is a low heat value fuel, a temperature of the molten metal bath is maintained within a desired range by adding heat to the molten metal bath.

17. A method of producing a fuel gas comprising,

providing a gasifier including a reaction chamber, a molten metal and an induction furnace,

induction heating the molten metal,

induction stirring the molten metal,

injecting a carbonaceous fuel into the molten metal generating the fuel gas, and collecting the fuel gas.

18. The method according to claim **17** wherein the induction furnace is a coreless induction furnace.

19. The method according to claim **18** wherein the induction furnace is integrally coupled to a bottom of the reaction chamber and the bottom includes an opening through which the molten metal is circulated between the induction furnace and the reaction chamber.

20. The method according to claim **19** wherein the bottom has an inside working circumference that is at least three times greater than a circumference of the opening.

21. The method according to claim **19** wherein a second induction furnace and a third induction furnace are coupled to the bottom of the reaction chamber, each of the induction furnace, the second induction furnace and the third induction furnace, being connected to a respective phase of a three phase industrial power supply.

22. The method according to claim **17** wherein the reaction chamber has a volume that is at least fifteen times greater than an inside working volume of the induction furnace.

23. The method according to claim **17** wherein the carbonaceous fuel and reaction gases are injected into a volume of the molten metal that is isolated from induction furnace.

24. The method according to claim **17** further comprising obtaining a temperature of the molten metal, determining whether the molten metal is at a desired temperature, and adding heat to the molten metal using the induction furnace to achieve the desired temperature.

25. The method according to claim **19** wherein the carbonaceous fuel and one or more reaction gases are introduced into a reaction area contained within the reaction chamber above

the molten metal , the reaction area being comprised of contiguous gasification zones, starting from the bottom and moving upward, designated as molten metal gasification zone, a slag gasification zone, a froth gasification zone and an off take gasification zones.

26. The method according to claim **1** further comprising injecting carbon in the carbonaceous fuel into the reaction chamber at a first rate and oxidizing carbon in the reaction chamber to carbon monoxide at a second rate wherein the first rate and the second rate are substantially the same.

27. The method according to claim **1** further comprising injecting carbon in the carbonaceous fuel into the reaction chamber at a first rate and oxidizing the molten metal at a second rate wherein the first rate and the second rate are substantially the same.

28. The method according to claim **1** further comprising oxidizing the molten metal to metal oxide at a first rate and reducing the metal oxide with carbon in the carbonaceous fuel at a second rate wherein the first rate and the second rate are substantially the same.

29. The method according to claim **9** further comprising injecting carbon in the carbonaceous fuel into the reaction chamber at a first rate and oxidizing the carbon in the reaction chamber to carbon monoxide at a second rate wherein the first rate and the second rate are substantially the same.

30. The method according to claim **9** further comprising injecting carbon in the carbonaceous fuel into the reaction chamber at a first rate and oxidizing the molten metal at a second rate wherein the first rate and the second rate are substantially the same.

31. The method according to claim **9** further comprising oxidizing the molten metal to metal oxide at a first rate and reducing the metal oxide with carbon in the carbonaceous fuel at a second rate wherein the first rate and the second rate are substantially the same.

32. The method according to claim **17** further comprising injecting carbon in the carbonaceous fuel into the reaction chamber at a first rate and oxidizing the carbon in the reaction chamber to carbon monoxide at a second rate wherein the first rate and the second rate are substantially the same.

33. The method according to claim **17** further comprising injecting carbon in the carbonaceous fuel into the reaction chamber at a first rate and oxidizing the molten metal at a second rate wherein the first rate and the second rate are substantially the same.

34. The method according to claim **17** further comprising oxidizing the molten metal to metal oxide at a first rate and reducing the metal oxide with carbon in the carbonaceous fuel at a second rate wherein the first rate and the second rate are substantially the same.

35. A method for producing a fuel gas comprising,
providing a reaction chamber containing a molten metal,
oxidizing the molten metal to metal oxide at a first rate,
injecting carbon into the reaction chamber at a second rate,
reducing the metal oxide at a third rate, and
oxidizing the carbon to carbon monoxide at a fourth rate.

36. The method according to claim **35** wherein the first rate, the second rate, the third rate and the fourth rate are substantially the same.

37. The method according to claim **35** wherein the first rate and the third rate are substantially the same.

38. The method according to claim **35** wherein the second rate and the fourth rate are substantially the same.

39. The method according to claim **35** wherein the molten metal is iron and the metal oxide is iron oxide.

40. The method according to claim **35** wherein the carbon is injected in the form of a carbonaceous fuel selected from the group consisting of municipal solid waste, medical waste, household hazardous waste, spent tires, biomass, bio-solids, industrial wastes, various grades of coal, coke and combinations thereof.

* * * * *