E. N. PREBLE.

SOLE PRESSING MACHINE.

APPLICATION FILED NOV. 3, 1910.

1,094,809. Patented Apr. 28, 1914.

2 SHEETS—SHEET 1.

Fig. 1.

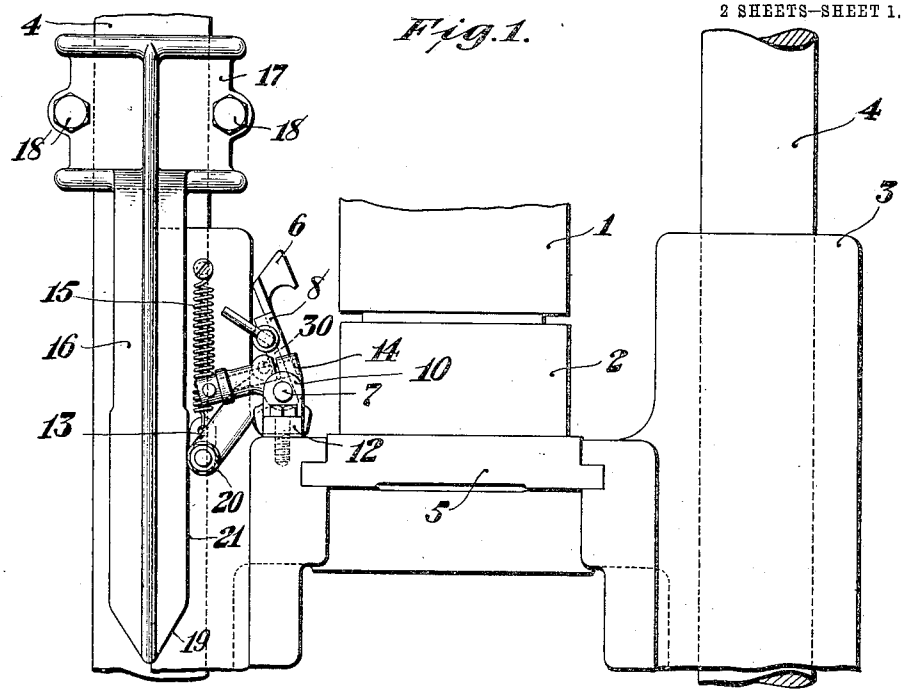

Fig. 2.

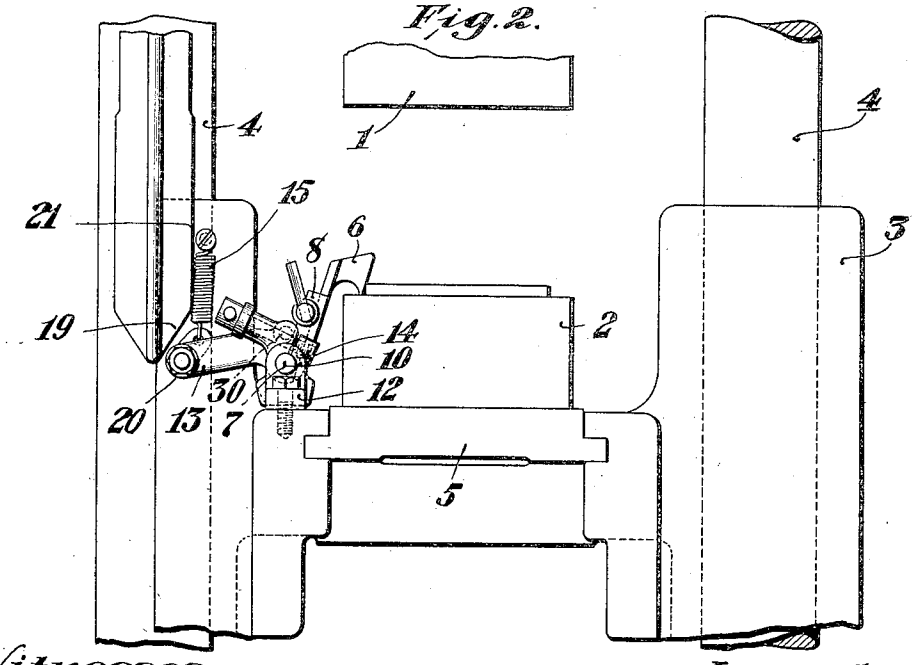

Witnesses:

E. C. Purdum

Burton W. Cary

Inventor:

Edwin N. Preble

by his Attorneys

Phillips, Van Orsdel & Kiesh

by Alfred H. Hildreth

COLUMBIA PLANOGRAPH CO., WASHINGTON, D. C.

E. N. PREBLE.

SOLE PRESSING MACHINE.

APPLICATION FILED NOV. 3, 1910.

1,094,809.

Patented Apr. 28, 1914.

2 SHEETS—SHEET 2.

Fig. 3.

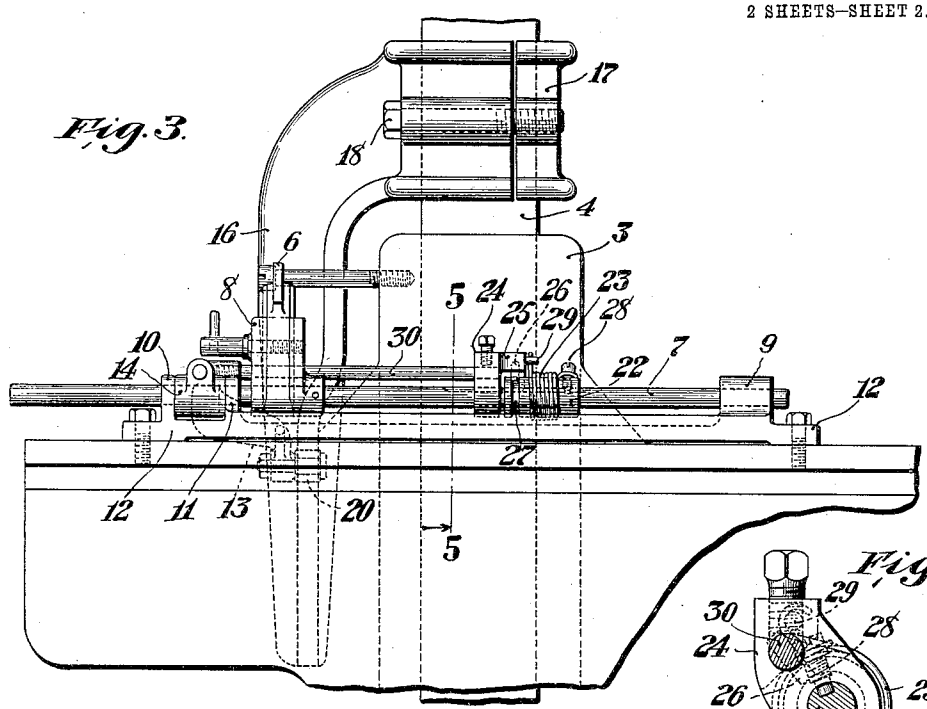

Fig. 5.

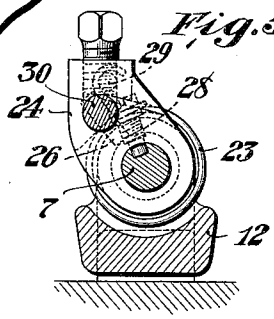

Fig. 4.

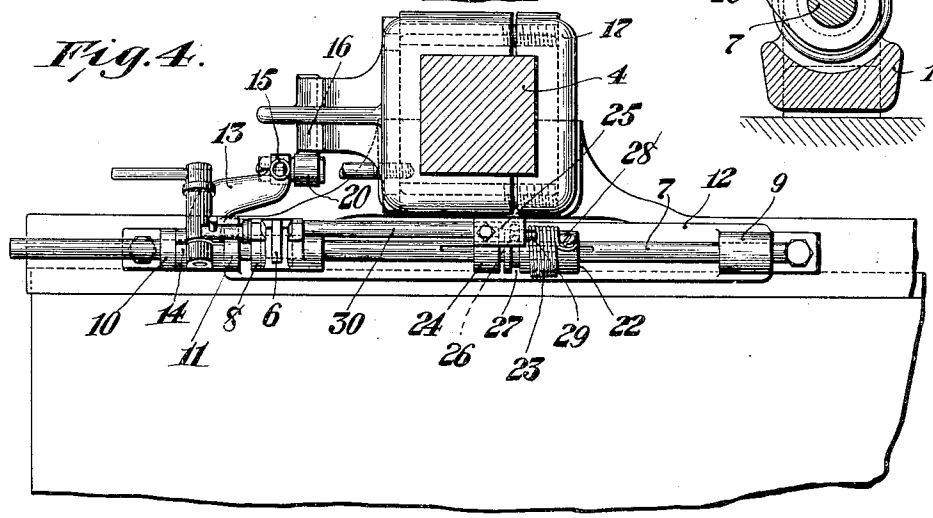

Witnesses:

E. C. Wurdeman

Burton W. Cary.

Inventor:

Edwin N. Preble

by his attorneys

Phillips, Van Etten & Fish

by Alfred H. Hildreth

COLUMBIA PLANOGRAPH CO., WASHINGTON, D. C.

UNITED STATES PATENT OFFICE.

EDWIN N. PREBLE, OF BEVERLY, MASSACHUSETTS, ASSIGNOR TO UNITED SHOE MACHINERY COMPANY, OF PATERSON, NEW JERSEY, A CORPORATION OF NEW JERSEY.

SOLE-PRESSING MACHINE.

1,094,809. Specification of Letters Patent. Patented Apr. 28, 1914.

Application filed November 3, 1910. Serial No. 590,477.

To all whom it may concern:

Be it known that I, EDWIN N. PREBLE, a citizen of the United States, residing at Beverly, in the county of Essex and State of Massachusetts, have invented certain new and useful Improvements in Sole-Pressing Machines; and I do hereby declare the following to be a full, clear, and exact description of the invention, such as will enable others skilled in the art to which it appertains to make and use the same.

The present invention relates to sole pressing machines, and more particularly to the gaging devices employed in connection with such machines.

It has been found desirable to employ a side gage when molding certain kinds of soles, which acts in conjunction with the usual heel gage, to position the sole laterally. This side gage ordinarily has provision for adjustment both transversely and longitudinally of the sole supporting form, and it is desirable to construct a gage which may be applied to existing types of sole molding machines without modifying or changing these machines. In some cases it has been found that when the adjusting means for the side gage were loosened, the side gage dropped down upon the lower form and the operator carelessly started the machine without again tightening the adjusting means, allowing the upper and lower forms to come together and crush the gage between them.

One object of the present invention is to improve the construction and mode of operation of side gages and to provide a side gage which may be readily applied to existing types of molding machines without modifying or changing the machines.

With this end in view, one feature of the invention contemplates the provision of a side gage and an operating arm therefor, supported upon a suitable base plate which is detachably fastened to the cross head at one side of the lower form. A cam plate is fastened to one of the supporting standards and is adapted to contact with the operating arm upon an upward movement of the cross head to retract the gage beyond the edge of the form prior to the engagement of the upper and lower forms. The gage and operating arm are arranged upon the base plate to occupy the free space between the form and the edge of the cross head, and the cam plate is fastened to one of the standards above the cross head so that no modification of the existing machine is necessary in order to properly apply this device.

A further object of the invention is to provide means which will effectually prevent the side gage from dropping down and remaining in contact with the lower form when the adjusting clamp is loosened. To this end, the gage is locked to a supporting shaft which is oscillated at the proper intervals to move the gage by an operating arm clamped to the shaft. A sleeve is also keyed to the shaft, and the sleeve is yieldably connected to the operating arm in such a manner that when the clamping means for the operating arm are loosened, the sleeve will rotate the shaft relatively to the arm and move the gage out of contact with the lower form.

In the drawings illustrating the preferred form of the invention, Figure 1 represents a detail of a sole molding machine with the side gage attached thereto, and illustrating the gage in its retracted position. Fig. 2 is a view, similar to Fig. 1, showing the side gage in its operative position in contact with the working face of the form. Fig. 3 is a detail showing a longitudinal elevation of the operating mechanism for the gage and showing the gage in its retracted position. Fig. 4 is a detail showing a plan view of the gage and operating mechanism therefor, with one of the supporting standards shown in section. Fig. 5 is a section upon the line 5—5 of Fig. 3 looking in the direction of the arrow.

In the illustrated embodiment of the invention, the side gage is shown applied to a sole molding machine of the type shown and described in application for Letters Patent of applicant, dated October 19, 1908, Ser. No. 458,330. In this type of machine, the upper form indicated at 1 is stationary, and the lower form or supporting form, which is indicated at 2, is vertically reciprocated beneath the upper form in order to exert pressure on the sole and then afford a clearance between the forms to permit the insertion and removal of the soles. For this purpose, the lower form 2 is supported upon a cross head 3 which is slidingly mounted upon the vertical standards 4, and is reciprocated by any suitable mechanism, not shown. The lower form, in addition to its vertical reciprocation, has also a movement

in a horizontal plane to carry the lower form into and out of alinement with the upper form from and toward a position of presentation at the front of the machine in order that the soles may readily be changed by the operator. For this purpose, the lower form 2 is mounted upon a slide 5 which slides in suitable guide ways formed in the cross head 2. The slide 5 is operated at the proper time by any suitable form of mechanism, not shown. This type of machine illustrates only a single application of the improved side gage, and it is to be understood that the use of this gage is not to be considered as limited to this form of machine, but is capable of general application.

The side gage comprises a gage member 6 provided with a laterally projecting portion which contacts with the working face of the lower form, and the gage is adjustably supported upon a shaft 7 by means of a clamp block which is pinned to the shaft. The provision of the clamp block 8 enables the gage to be adjusted in a substantially vertical direction toward and from the working face of the form. The shaft 7 is journaled at its opposite ends in the lug 9 and lugs 10 and 11 respectively, projecting from a base plate 12, which is detachably connected to the cross head 3, at one side of the form 2.

In order to better accommodate for varying sizes of forms, the actuating mechanism for the gage preferably comprises means for normally moving the gage into contact with the form and a cam plate which operates to positively retract the gage upon an upward movement of the form. The gage is preferably provided with an operating arm which engages with the cam plate to retract the gage upon an upward movement of the form. In the lowest position of the form, the operating arm does not contact with the cam plate and the gage is held in yielding engagement with the face of the form by a spring connected to the free end of the operating arm. With this arrangement the gage will always be moved into contact with the face of the form at the proper time independently of the exact shape of the cam plate, which avoids the necessity of making the cam as accurately as was necessary in previous devices of this character. To this end the actuating mechanism comprises an operating arm 13 which is clamped to the shaft 7 by means of the clamp block 14 which is mounted upon the shaft between the lugs 10 & 11. The operating arm is connected at its free end to a spring 15, which is fastened to the cross head 3. A downwardly extending cam plate 16 is supported upon one of the standards 4 by means of the split sleeve 17 and clamping bolts 18. When the lower form is in its lowest position, the plate 16 does not contact with the operating arm 13, but upon a vertical movement of the cross head 3, the operating arm engages with an inclined face 19 formed upon the lower end of the plate 16. The operating arm is thereby moved against the action of the tension spring 15 to retract the gage 6 a sufficient amount to clear the edge of the form 2. As the cross head 3 continues in its vertical movement, the operating arm 13, which is provided with an antifriction roll 20, rides along the vertical working face 21 of the plate 16, retaining the side gage in its retracted position.

The side gage is adjusted to any point laterally of the form by the provision of the clamp block 14 and the clamp block 8. Upon loosening the two clamp blocks, the gage is adjusted longitudinally in the clamp block 8 and is also adjusted angularly to the operating arm 13 by turning the shaft in the clamp block 14, and the combination of the two adjustments enables the operator to position the gage so that it will contact with the surface of the form at any desired lateral point. The loosening of the clamp block 14 also enables the gage and supporting shaft to be adjusted longitudinally of the form in order to always position the gage at the ball line upon varying lengths of forms. It is desirable to provide means which will prevent the gage from dropping down into contact with the face of the form 2 when the clamp block 14 is loosened, and thus avoid accidental crushing of the gage between the upper and lower forms in case the operator starts the machine while the clamp block is still loose upon the shaft, or in case the clamp block becomes loose during the operation of the machine. To this end a sleeve 22 is splined to the shaft 7 and is provided with a coiled spring 23 surrounding its outer periphery. A block 24 is loosely supported upon the shaft 7 adjacent to the sleeve and is provided with a projecting portion 25 having a pin 26 angularly extending therefrom, (as shown clearly in Fig. 5). The end of the pin 26 is seated in a peripheral groove 27 formed in the sleeve 22 and locks the block 24 and sleeve 22 against longitudinal movement relatively to one another. The coiled spring 23 is connected at one end to the sleeve 22 by means of the screw 28 and is connected at its opposite end to the block 24 through a horizontally projecting pin 29 mounted upon the block. The block 24 is fixed against rotation relatively to the operating arm 13 by a connecting rod 30 which is detachably mounted at its opposite ends in the block 24 and clamp block 14 respectively. The tendency of the spring 23 is to rotate the sleeve 22 and shaft 7 relatively to the block 24 in a direction to retract the gage 6.

Thus it will be seen that when the clamp block 14 is loosened and the shaft 7 is allowed to rotate relatively to the arm 13, the spring 23 will immediately retract the gage and retain it in a retracted position until the operator adjusts it manually.

Having thus explained the nature and objects of the invention, and described one preferred form thereof, what is claimed is:—

1. A sole pressing machine comprising a movable supporting form, a side gage coöperating with the form to position the work thereon, actuating mechanism for the gage adapted to move the gage into and out of contact with the form, the side gage adapted to be adjusted to contact with the form at any desired point, means for retaining the adjustment of the gage, and mechanism for moving the side gage out of contact with the form when the said means are inoperative, substantially as described.

2. A sole pressing machine comprising a movable supporting form, a side gage coöperating therewith, a supporting shaft for the gage, an operating arm connected to the shaft, means connected to the arm normally tending to move the side gage into contact with the form, and means operating to move the gage out of contact with the form upon upward movement of the form, substantially as described.

3. A sole pressing machine comprising a movable supporting form, a side gage coöperating therewith, a supporting shaft for the gage, an operating arm connected to the shaft, means for clamping the arm in any adjusted position upon the shaft, and mechanism yieldably connecting the shaft and arm adapted to rotate the shaft relatively to the arm when the clamping means are loosened, to retract the side gage beyond the edge of the lower form, substantially as described.

4. A sole pressing machine comprising a movable form, a side gage coöperating therewith, a supporting shaft for the gage, an operating arm connected to the shaft, a tension spring connected to the free end of the arm, and a cam plate mounted upon the machine frame and adapted to move the operating arm in a direction to retract the side gage upon an upward movement of the form, substantially as described.

5. A sole pressing machine comprising a movable form, a side gage coöperating therewith, a supporting shaft for the side gage, an operating arm clamped to the supporting shaft, a sleeve locked against rotation relatively to the supporting shaft, a block loosely supported on the shaft, a spring connecting the block and sleeve, and normally tending to rotate the sleeve relatively to the block, and operative connections between the block and operating arm adapted to prevent a relative rotation of the block and arm, substantially as described.

6. A sole pressing machine comprising a vertically movable form, a side gage coöperating therewith, a spring for causing the gage to normally contact with the working face of the form, and means for positively moving the side gage out of contact with the form during the movement of the form into a pressure producing position, substantially as described.

EDWIN N. PREBLE.

Witnesses:
BURTON W. CARY,
LAURA M. GOODRIDGE.

Copies of this patent may be obtained for five cents each, by addressing the "Commissioner of Patents, Washington, D. C."