2 Sheets—Sheet 1.

D. E. PARIS.

PARLOR-STOVES.

No. 194,107. Patented Aug. 14, 1877.

Fig. 1.

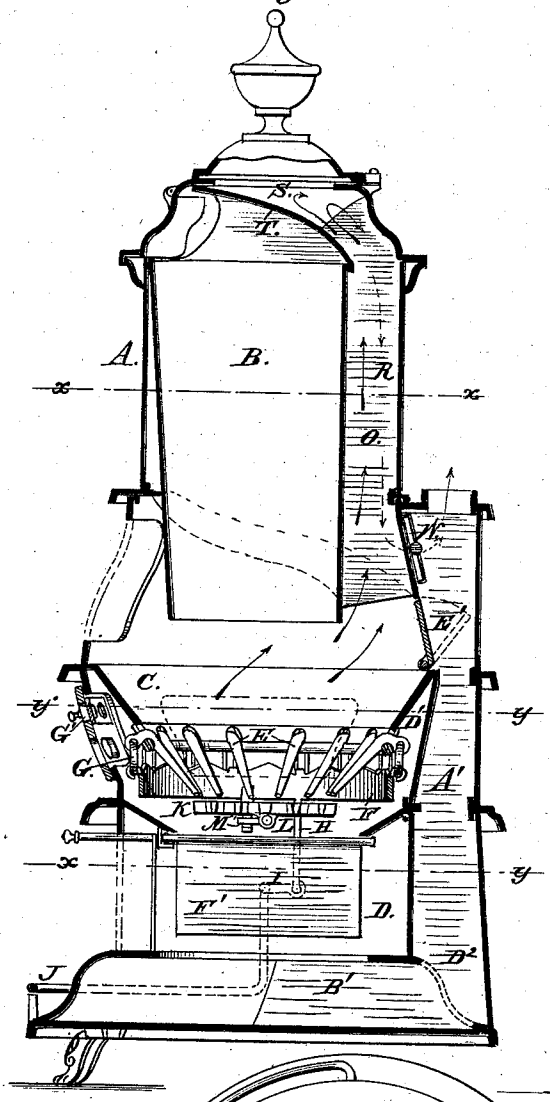

Fig. 2.

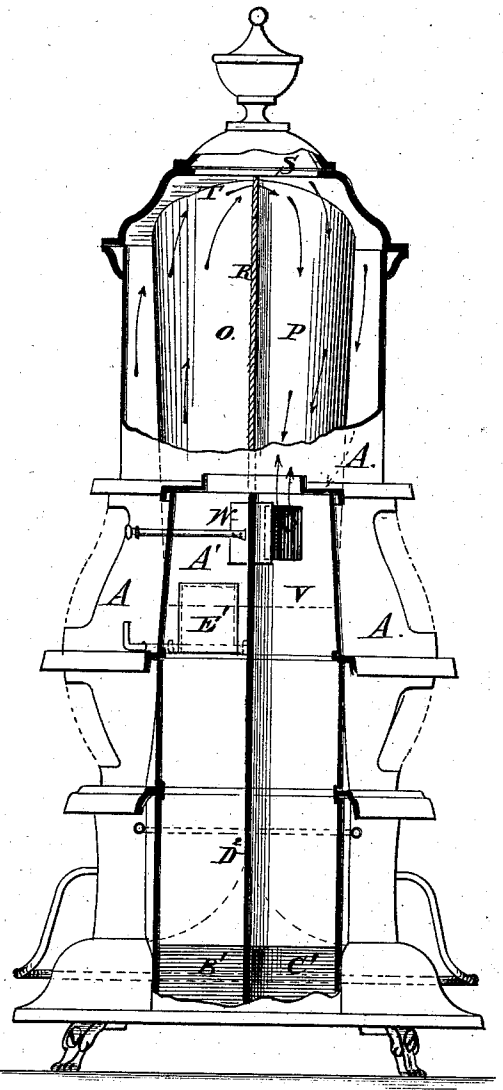

Fig. 3.

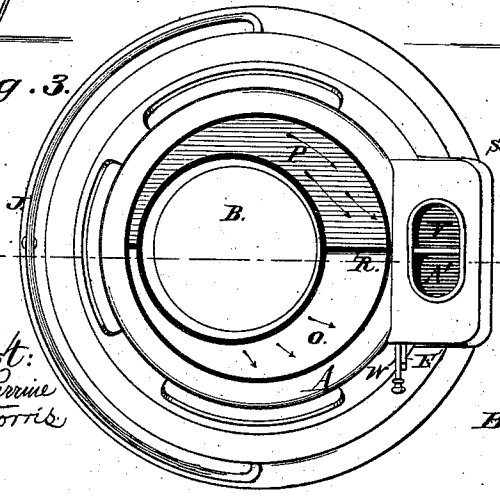

Section on line x. x.

Attest:
H. L. Perrine
A. H. Norris

Daniel E. Paris
Inventor.
By James L. Norris
Attorney.

N. PETERS, PHOTO-LITHOGRAPHER, WASHINGTON, D. C.

2 Sheets- Sheet 2.

D. E. PARIS.

PARLOR-STOVES.

No. 194,107. Patented Aug. 14, 1877.

Fig. 4.

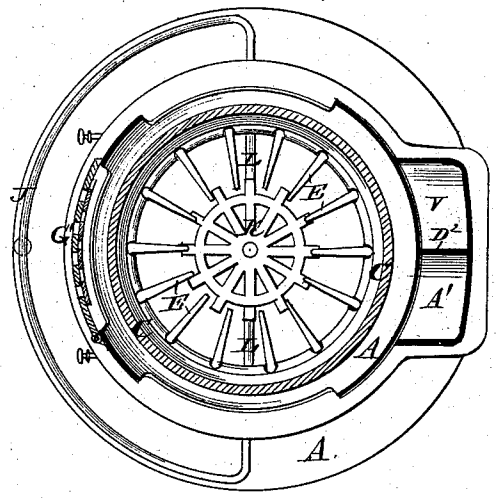

Section on line y.y.

Fig. 5.

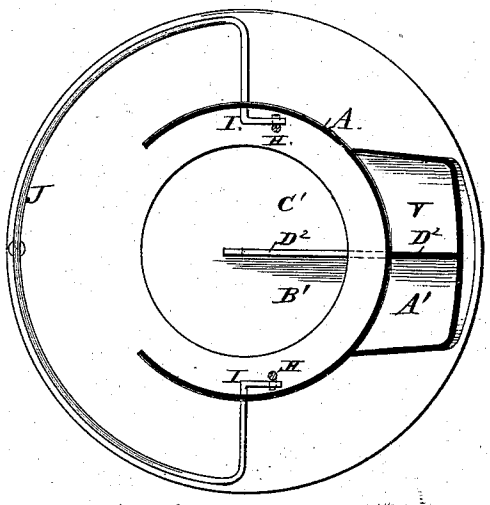

Section on line x.y.

Fig. 6.

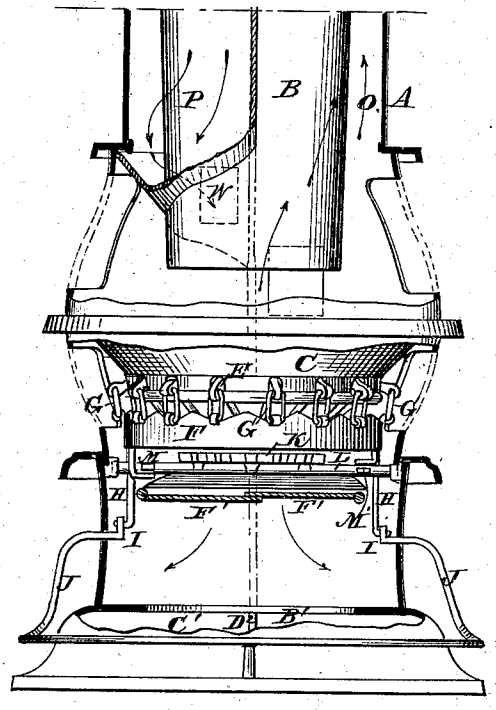

Fig. 7.

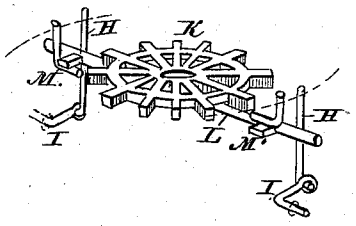

Attest:
W. L. Perrine
A. H. Norris

Daniel E Paris.
Inventor.

By. James L. Norris
Attorney.

N. PETERS, PHOTO-LITHOGRAPHER, WASHINGTON, D. C.

UNITED STATES PATENT OFFICE.

DANIEL E. PARIS, OF OMAHA, NEBRASKA.

IMPROVEMENT IN PARLOR-STOVES.

Specification forming part of Letters Patent No. **194,107**, dated August 14, 1877; application filed July 12, 1877.

To all whom it may concern:

Be it known that I, DANIEL E. PARIS, of Omaha, in the county of Douglas and State of Nebraska, have invented certain new and useful Improvements in Parlor-Stoves, of which the following is a specification:

This invention relates to certain improvements in magazine-stoves for heating purposes, its object being to facilitate the raking of the fire and dumping of the grate, to provide for rapidly and effectively heating a pot or kettle of water or other article on top of the stove, and to enable the lower part of the stove to be employed as a baking-oven for cooking purposes.

The invention consists, first, in a series of levers or fingers pivoted around the lower part of the fire-pot of a stove, and forming a part of the sides of the same, said fingers being capable of being raised or lowered by means of suitable mechanism to separate the ashes from the coal; second, in a fender or foot-rest for a stove, adapted to operate as a shaker or lever for the grate, whereby said grate may be operated to separate the ashes from the coals; third, in the combination, with the oscillating fingers or levers, of a dumping-bottom, the two being capable of being simultaneously operated by means of an annular frame suspended from the fingers, and provided with lugs engaging with lugs on the axis of the dumping-grate, said frame being operated by levers connected with a fender-bar, for the purpose of raking or dumping the grate; fourth, the combination, with the ash-pit and fire-box of a base-heating stove, of folding doors or dampers located below the grate, and adapted to be closed against the grate, to adapt the ash-pit to be employed as an oven.

In the drawings, Figure 1 represents a vertical sectional view of my improved stove. Fig. 2 represents a view, showing partly a rear elevation and partly a section of the stove. Fig. 3 represents a top view of the stove with the upper part removed. Fig. 4 represents a horizontal section on the line *y y* of Fig. 1. Fig. 5 represents a horizontal section on the line *x y* of Fig. 1; Fig. 6, a front elevation, with a portion of the shell broken away; and Fig. 7, a detached perspective view of the grate, showing the means for operating the same.

The letter A represents the outer shell of the stove; B, the magazine; C, the fire-box, and D the ash-pit, arranged relatively to each other, as usual. The lower part of the fire-box is composed of an annular truncated frustum of metal, which may be lined with fire-brick, if desired, the upper edge being secured to the interior of the stove-shell at its largest diameter, and the lower edge depending within said shell, leaving an annular draft-space, D′, between the said fustrum and stove-shell. The lower edge of said frustum or section is slotted at convenient distances, and within said slots are located the bent levers or fingers E, each lever being notched underneath, so as to set over the lower edge of the slot, and permit said lever to oscillate freely thereon.

F represents an annular frame of metal, suspended immediately below the fire-pot, by means of a series of links, G, attached to the upper ends of the levers or fingers E. From each side of said annular frame depends a link, H, the lower ends of which, respectively, are connected to the inner ends of two levers, I, which extend through opposite sides of the ash-box of the stove, the outer ends of said levers being connected to the ends of a curved fender-bar, J, which extends around the front of the stove-base.

K represents the dumping-bottom of the stove-grate, located between the fire-box and the ash-pit in such position relatively to the fingers or levers E that when the two are in their normal position the lower ends of the fingers will rest between the bars, forming the lining to the fire-pot, or a downwardly-projecting part of the fire-pot itself. Said dumping-bottom is secured upon a transverse rock-shaft, L, or is provided with trunnions at each side journaled in the walls of the ash-pit, and said journals or trunnions, on opposite sides of the dumping-bottom, are provided with horizontal lugs or projections, under one of which sets an L-shaped lug, M, and over the other a similarly-shaped lug, M′, both of which depend from the bottom of the annular frame, and which serve to oscillate the

dumping-bottom simultaneously with the movement of the levers or fingers E, as hereinafter more fully explained; or the grate may be entirely detached from the annular frame, and operated separately from it, which is preferable for ordinary uses.

An annular space is left between the walls of the magazine and the external shell of the stove, and this space is divided into two flues, O and P, by means of the vertical partition R, one of said flues communicating at its lower end with the upper part of the fire-chamber, and at its upper end with a space, S, formed immediately below the pot or boiler aperture, by means of an inclined partition-plate, T, which divides said space from the interior of the magazine. The other flue, P, communicates at its upper end with said space S, and at its lower end with an escape-flue, V, located at the rear of the stove, the opening at said lower end of the flue being provided with a damper, W, for the purpose of controlling the passage of the products of combustion, as more fully hereinafter explained.

At one side of the flue V is formed a similar flue, A′, the two extending downwardly to the base of the stove, and communicating with a space below the ash-pit of the stove, said space being divided into two communicating flues, B′ and C′, by means of a partial partition, D^2. The upper end of the flue A′ communicates with the fire-chamber by means of a suitable opening, which is provided with a damper, E′, for opening or closing communication between said flue and fire-chamber.

Directly below the grate are located two swinging doors or dampers, F′, one at each side of the ash-pit, which are capable of being folded up against the lower part of the grate when desired, so as to cut off communication between the ash-pit and the fire-chamber, in order to allow the ash-pit to be used as an oven when desired, as more fully hereinafter explained.

In order to provide for a proper draft at all times, whether said dampers are closed or not, the draft openings and register G′ are located above the ash-pit, said openings communicating with the annular draft-chamber surrounding the grate and lower part of the fire-box.

The opening for filling the magazine is located at one side on top of the stove, immediately below the upper end of the inclined partition-plate, which divides the magazine from the space below the pot or kettle hole, and is provided with a hinged cover, by which it may be closed; and the stove is provided with suitable openings around the fire-chamber, which are inclosed by mica plates, as usual; and similar openings and micas may be arranged around the annular draft-passage, if desired.

The operation of my improved stove is as follows: The fire is kindled and the magazine is filled with coal, as usual. Upon opening the damper E′ and closing the damper W the products of combustion pass directly into the escape-flue and out of the chimney, giving a direct draft, to enable the fire to be readily started. Upon closing the damper E′ and opening the damper W the products of combustion will be caused to pass up into the flue O and space S, and downward into the flue V.

When it is required to loosen and discharge the ashes from the grate the foot-rail or fender is partially elevated, which correspondingly elevates the fingers, and also tips the dumping-grate if it is attached. By moving the fender up and down quickly the fingers are rapidly moved up and down, thus rattling and sifting the ashes from the coals completely, while the coal itself is held up in the fire-pot, and only allowed to fall back upon the grate when the fingers resume their normal position in the sides of the fire-pot.

When the fingers assume a horizontal position they practically take the place of a stove-grate by holding the coals upward, thus forming, as it were, a lifting-grate, by means of which the coals are lifted upward from the grate proper, and as the lifting-grate again resumes its normal position the lower coals in the fire-pot fall downward upon the grate, leaving the whole mass honeycombed, as it were, and lying loosely in contact with each other, so that the air entering through the draft-openings may easily pass up through, causing more perfect combustion.

By this practically double grate the coals can be lifted upward off of the lower grate, and may be held in such position, so that the fire may be rekindled upon the grate, if it should become extinguished, without dumping the coal from the fire-pot, and the lower grate may be raked off, if desired, while the mass of burning coal is held upon the upper grate.

It will be seen that as thus constructed the fire or coals can be raked and cleaned of ashes without opening any doors whatever, and all inconvenience from escaping dust and ashes will be avoided. Moreover, no slag or clinkers will be formed in said stove, for by the action of the fingers all such accumulations that naturally fall to the grate are lifted up and lodged in the center of the burning fuel, after they have been freed from ashes, and entirely consumed.

What I claim, and desire to secure by Letters Patent, is—

1. A series of levers or fingers pivoted around the lower part of the upper section of the fire-pot of a stove, and forming a part of the sides of the same, said fingers being capable of being raised or lowered by means of suitable mechanism to separate the ashes from the coals.

2. A fender-bar or foot-rest for a stove, consisting of the curved bar J, extending around the lower part of one side of the stove and secured to the bent levers I I, extending

through the walls of the stove, and connected with the frame for operating the fingers, said fender-bar or foot-rest being adapted to serve as a shaker for the grate, whereby said grate may be operated to separate the ashes from the coals.

3. In combination with the oscillating fingers or levers, a dumping-bottom, the two being capable of being simultaneously operated by means of an annular frame suspended from the fingers, and provided with lugs engaging with lugs on the axis of the dumping-grate, said frame being operated by levers connected with a fender-bar, for the purpose of rocking said dumping-grate.

4. In combination with the ash-pit and fire-box of a base-heating stove, the folding doors or dampers located below the grate, and adapted, in the manner described, to be closed against the same, to adapt the ash-pit to be used as an oven.

In testimony that I claim the foregoing I have hereunto set my hand in the presence of the subscribing witnesses.

DANL. E. PARIS.

Witnesses:
JOHN F. FOLEY,
GEO. M. POWERS.