(No Model.) 4 Sheets—Sheet 1.

LA VERNE W. NOYES.

HARVESTER.

No. 395,343. Patented Jan. 1, 1889.

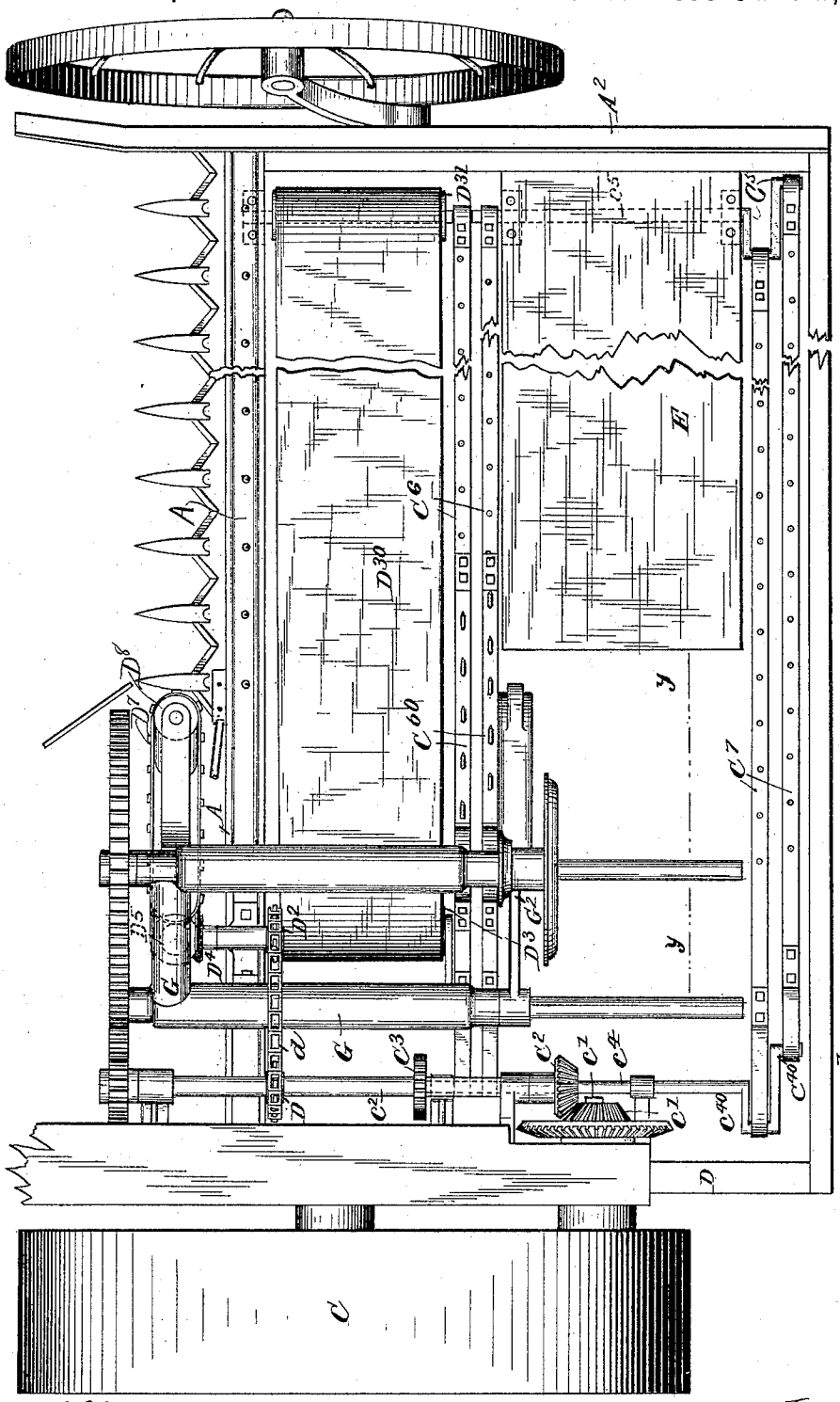

Witnesses:
J. B. Dover
Jean A. Warriner

Inventor.
L. W. Noyes
By Burton & Burton
his Attys.

N. PETERS, Photo-Lithographer, Washington, D. C.

(No Model.) 4 Sheets—Sheet 2.

LA VERNE W. NOYES.

HARVESTER.

No. 395,343. Patented Jan. 1, 1889.

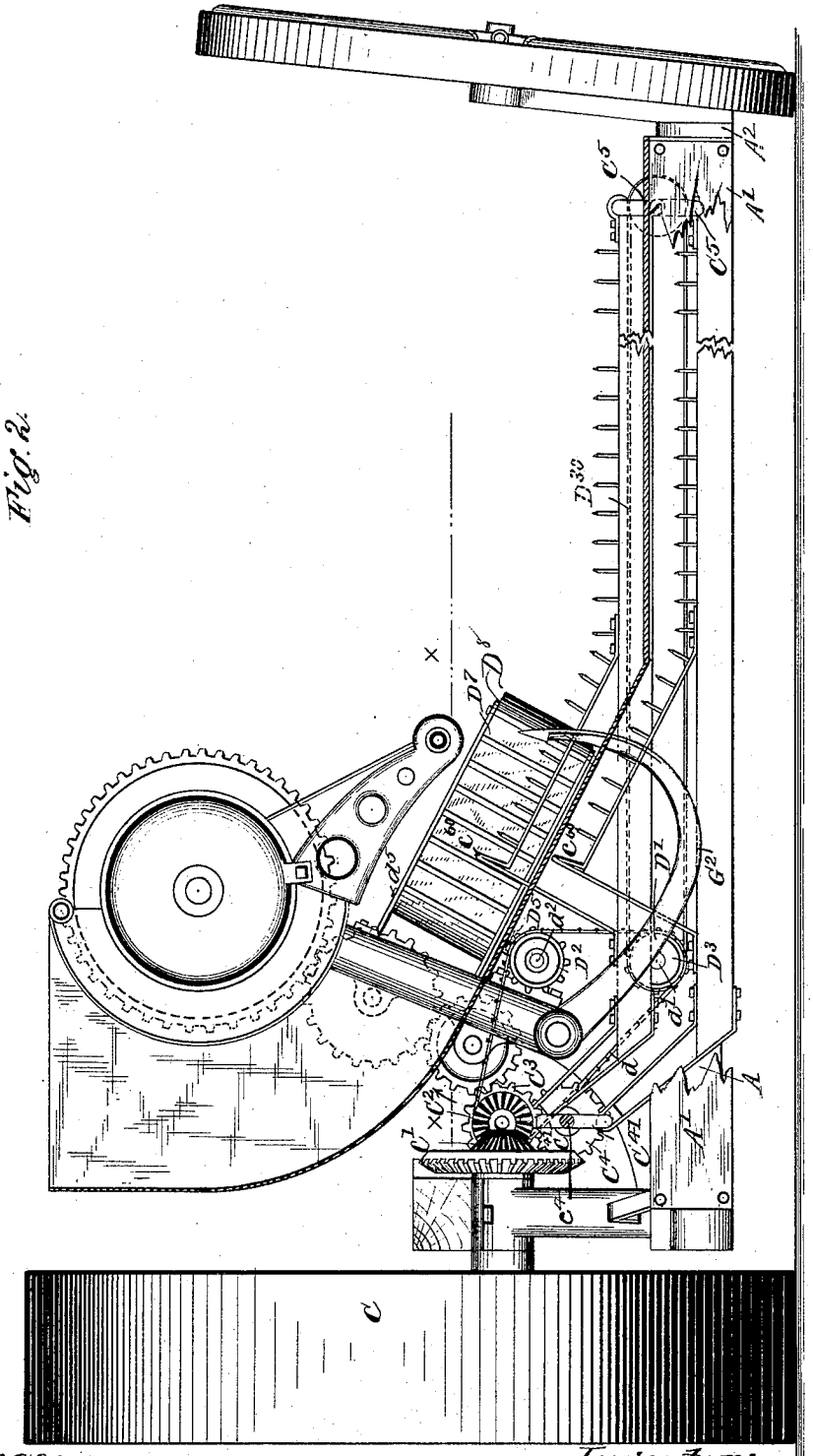

Fig. 2.

Witnesses:
Sam'l B. Dover
Jean A. Warriner

Inventor:
L. W. Noyes
By Burton & Burton
his Attys.

N. PETERS, Photo-Lithographer, Washington, D. C.

(No Model.)

4 Sheets—Sheet 3.

LA VERNE W. NOYES.

HARVESTER.

No. 395,343. Patented Jan. 1, 1889.

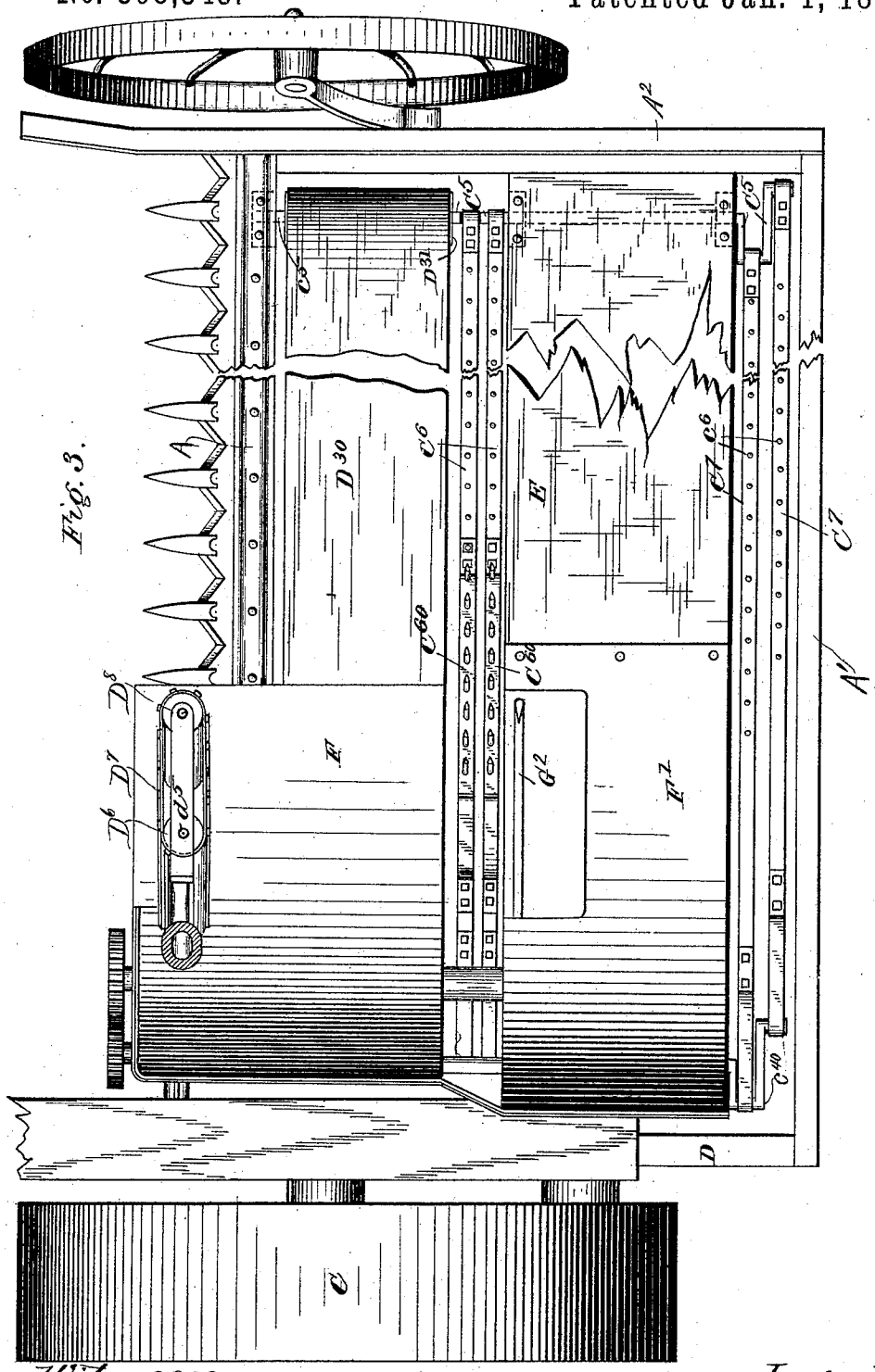

Witnesses:
Jam. B. Dover.
Jean A. Warriner.

Inventor.
L. W. Noyes
By Burton and Burton
his attys.

N. PETERS, Photo-Lithographer, Washington, D. C.

(No Model.) 4 Sheets—Sheet 4.

LA VERNE W. NOYES.

HARVESTER.

No. 395,343. Patented Jan. 1, 1889.

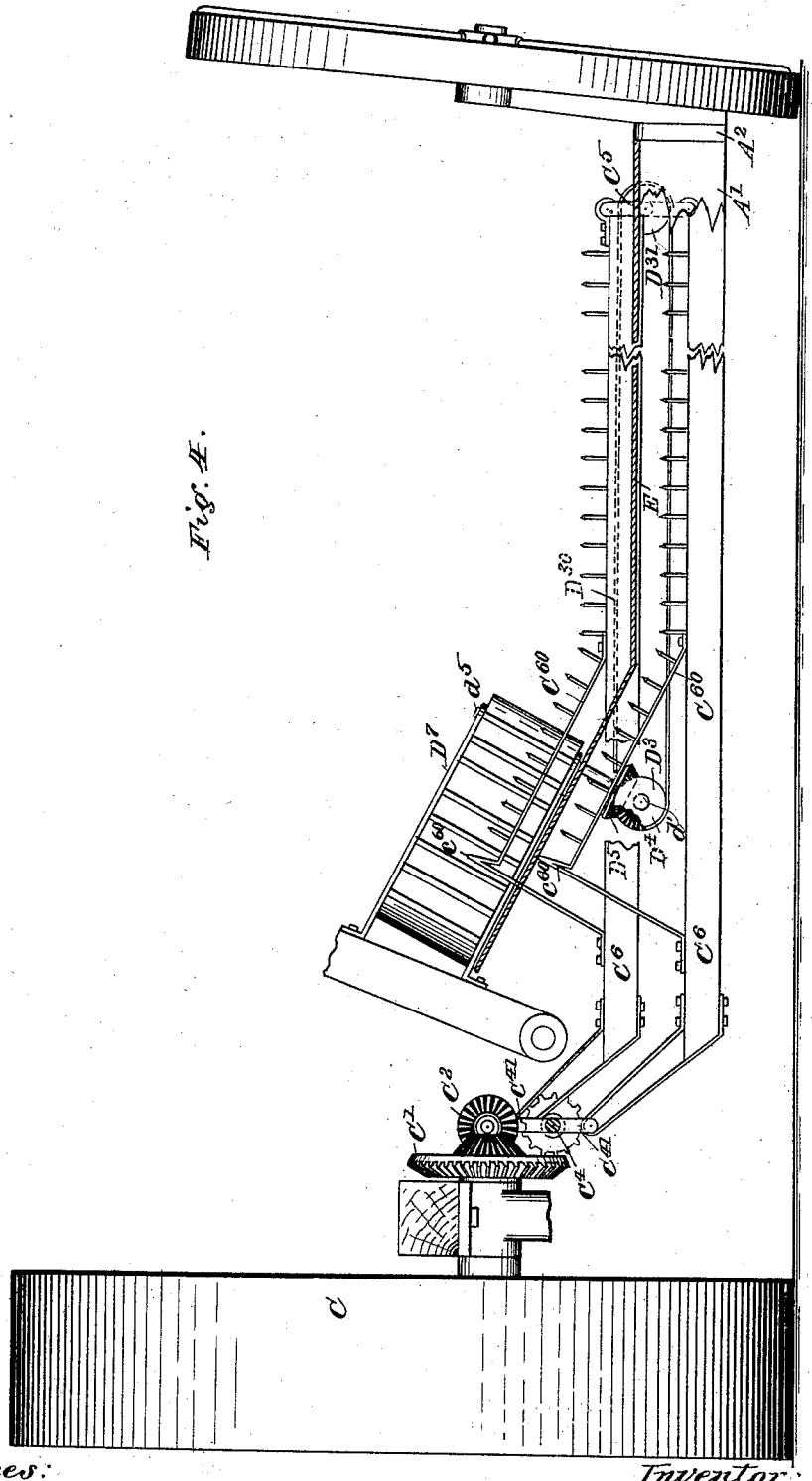

Witnesses:
S. B. Dover,
Jean Elliott

Inventor:
L. W. Noyes
By Burton & Burton
his attys

N. PETERS, Photo-Lithographer, Washington, D. C.

UNITED STATES PATENT OFFICE.

LA VERNE W. NOYES, OF CHICAGO, ILLINOIS.

HARVESTER.

SPECIFICATION forming part of Letters Patent No. 395,343, dated January 1, 1889.

Application filed February 24, 1888. Serial No. 265,140. (No model.)

To all whom it may concern:

Be it known that I, LA VERNE W. NOYES, a citizen of the United States, residing in the city of Chicago, county of Cook, and State of Illinois, have invented certain new and useful Improvements in Harvesters, which are fully set forth in the following specification, reference being had to the accompanying drawings, forming part thereof.

Figure 1 is a plan upon the harvester-platform and a portion of a binder frame and deck containing my invention. Fig. 2 is a rear elevation of the same parts. Fig. 3 is a plan of the platform and binder-deck, the binder-frame being cut away on the line x x, Fig. 2. Fig. 4 is a detail rear elevation of a modification of part of the platform conveying mechanism.

This invention is partly illustrated and described in my application, Serial No. 245,055, filed July 23, 1887, and now pending in the Patent Office, but is not therein claimed. It relates to the platform conveying mechanism and certain details of the relations of that mechanism to the binder and binder-deck.

The platform-frame comprises the front and rear sills, A and A′, respectively, which are joined together by the divider-sill A^2, and are further connected by being both joined to the main frame D at the stubble end.

G is the binder-frame.

C is the drive-wheel, from which power is communicated in the usual manner to a driving-train, of which the first wheel shown is the beveled gear-wheel C′, fixed on the shaft c', and meshing with the beveled gear-wheel C^2, whose shaft c^2 extends forward and carries a gear-wheel, C^3, which meshes with the gear-wheel C^4, which is fixed on the horizontal shaft c^4. The bearings of all the shafts thus far described are obtained in the main frame and suitable brackets secured thereto. The shaft b^4 is bent to form four cranks, c^{40} c^{40} and c^{41} c^{41}, which are arranged in pairs, the two of each pair being one hundred and eighty degrees apart, about the axis of the shaft, and the two pairs being ninety degrees apart, so that the four cranks stand in two radial planes at right angles, two cranks being in each plane at opposite sides of the shaft. In suitable bearings secured to the platform-frame near the grain end there is journaled another crank-shaft, c^5, which has four cranks, C^5, precisely similar and similarly arranged to those of the shaft c^4. The cranks on the shaft c^5 are connected, respectively, to the cranks on the shaft c^4 by links which constitute feed-bars C^6 C^6 and C^7 C^7. Upon the forward part of the shaft C^2 C^2 there is fixed the sprocket-wheel D, over which the chain d passes and drives the shafts d' and d^2 by means of the sprocket-wheels D′ and D^2, fixed on said shafts, respectively. Upon the shaft d' there is fixed also the drum or roller D^3, which drives the endless conveyer-belt D^{30}. Said belt passes over the roller D^{31}, carried on the crank-shaft c^5 forward of the feed-bars C^6. On the forward part of the shaft d^2 there is fixed the beveled gear-wheel D^4, which meshes with and drives the beveled gear-wheel D^5, which is fast on its shaft d^5, and on the upper portion of said shaft there is made fast the drum or roller D^6. This drum D^6 drives the butting-belt D^7, which is carried over the idle-roller or drum D^8 at the grain end. The shaft d^5 is inclined from a vertical position, leaning grainward, and the butting-belt D^7 accordingly travels in an inclined direction upward from grain to stubble end.

The rear portion of the platform-frame between the feed-bars C^6 and C^7 is covered with the fixed decking E, which extends from the divider-sill to a point about in the rear of the inside divider or the stubble end of the sickle. The binder-deck is secured to the binder-frame in an inclined position sloping upward from the platform toward the drive-wheel. It consists of two parts, F and F′, which are respectively in front and in the rear of the vertical plane of the needle. The part F′ of the binder-deck laps on top of the stubble end of the platform decking E, and is secured thereto. The part F overhangs the front sill-bar and extends grainward past the vertical plane of the axis of the conveyer driving-roller D^3, and extends down close to (though not necessarily in contact with) the upper surface of the conveyer-belt D^{30}. Between the fixed deck E and the conveyer-belt D^{30} it will be seen that the feed-bars C^6 are located and operated, and behind the deck E the feed-bars C^7 operate. These feed-bars are all pro-

vided with upstanding teeth c^6, and by the operation of the cranks c^{40} and c^{41} they receive a reciprocating motion horizontally, as well as a rising and falling motion through the platform. By reason of the arrangement of the cranks, as described, ninety degrees apart around the axes of their shafts, there is no dead-center, and the shaft c^4 therefore communicates rotary motion to the shaft C^5 by means of the feed-bars. It will be further noticed that no two of said feed-bars will be at any one time in the same position, one of each pair being at the highest point, while the other is at the lowest, both being at the middle point of their horizontal reciprocation, while the other two are at the middle point of their vertical movement, one of them being at the extreme position stubbleward, while the other is at the extreme position grainward. I prefer to actuate the bars of each pair by cranks one hundred and eighty degrees apart, so that said bars will be at opposite extremes of their motion at the same time, while both bars of the other pair will be at intermediate points with respect to the movement of the first. To the bars C^6, I secure at a point, which, when the bars are farthest stubbleward, is a little grainward from the line of the grainward edge of the binder-deck, the slanting bars C^{60} C^{60}. These bars are toothed similarly to the main feed-bars and constitute continuations thereof, and they extend toward the binder far enough, so that at their extreme stubbleward position they occupy the ordinary position of packers reaching nearly to the vertical plane of the needle rock-shaft.

The operation of this mechanism is that grain which falls upon the platform has its butts continuously removed stubbleward by the endless conveyer D^{30}, while the alternating reciprocating feed-bars C^6 engage it above the butts and feed it positively in the same direction. If the grain is long enough, it will be further engaged at the heads by the alternately reciprocating bars C^7.

The tendency of grain falling on a horizontal platform is to be retarded at the butts, which causes it to assume an oblique position heads foremost as it approaches the binder. This effect is prevented by the arrangement herein described, since the heads, unless the grain be quite long, will rest upon the fixed decking E, while the butts will be continuously actuated by the endless conveyer D^{30}, and the alternately-reciprocating feed-bars C^6 will engage it at about the middle point and render its movement positive, notwithstanding any retardment which may be experienced by the butts resting on the finger-bar or the heads upon the decking E. If the grain be long, so that the heads would be liable to be retarded too much by the decking E, that effect would be prevented by the bars C^7. These several feeding devices will carry the grain stubbleward to the binder-deck F F′, and by means of the upwardly-inclined portion C^{60} of said feed-bars the grain will be positively propelled and lifted upon the inclined binder-deck, and thus fed within range of the needle G^2. The feed-bars C^6 and their extensions C^{60} operate as the packers, being close to the plane of the needle and operating past it. As one of these bars rises through the deck, causing its teeth to enter the grain from below, the other is descending, withdrawing its teeth from the grain, so that each in turn lifts the grain up off the deck and over the foremost tooth of the other and there holds it and further advances it upon the inclined deck, packing it positively ready for the binding action of the needle. In order to operate most effectively in this manner, I prefer to make the foremost or most stubbleward tooth, c^{60}, of these feed-bars longer than the remaining teeth, so that the grain being packed by it is not released from its pressure until the other bar has risen far enough to effectively engage it and continue the packing process.

By reason of the connection of the rear part, F′, of the binder-deck with the platform-decking E, and further by reason of the fact that the slanting portion C^{60} of the feed-bars commences grainward of the binder-deck, and that said bars rise above the deck and lift the grain positively as they carry it onto the binder-deck, the grain has no opportunity to be carried by the endless conveyer under the edge of the deck, but is at the rear part guided continuously from the platform-deck E onto the binder-deck F, and at the forward part is lifted by its feed-bars C^6 C^{60} off the belt E^{30} onto the deck F′. In connection with this forwarding mechanism the butting-belt D^7, which stands entirely above the binder-deck F, operates in the usual manner of such devices to even and assist in forwarding the butts.

I do not claim, broadly, the doubly-cranked shafts C^4 and C^5 as means for operating the alternately-reciprocating feed-bars, because I am aware that that movement has heretofore been used for a similar purpose.

Instead of driving the canvas belt D^{30} from the stubble side, as above described, I consider it preferable, on some accounts, to drive it by the roller D^{31}, which in that case is made fast on the shaft c^5. When this construction is adopted, I locate the roller D^3 at the stubble side in such position that from its shaft d' the butting-belt D^7 may be driven, as shown in Fig. 4, the bevel gear-wheel D^4 being in that case fixed on the shaft d', and the bevel gear-wheel D^5 being fixed on the shaft of the roller at the grain end instead of the stubble end of the butting-belt.

The speed of the canvas belt D^{30} is made such as desired relatively to that of the feed-bars by making the radius of the roller D^{31} a proper size relatively to the cranks C^5.

I claim—

1. In combination with the continuously-operating endless-belt conveyer, a pair of alternately-reciprocating feed-bars operating parallel thereto and in the rear thereof, and a

fixed platform-deck located in the rear of said feed-bars and substantially in the horizontal plane of the endless belt, substantially as and for the purpose set forth.

2. In combination with the binder-deck sloping upward from the receiving to the discharging side, the endless-belt platform conveyer extending underneath the receiving edge of the binder-deck and located at the forward part of the platform, and the alternately-reciprocating feed-bars parallel thereto and extending also beyond the receiving edge of the binder-deck nearly to the vertical plane of the needle rock-shaft and bent upward at their stubbleward ends, substantially as set forth.

3. In combination with the endless-belt conveyer located at the forward part of the platform, a pair of alternately-reciprocating feed-bars located in the rear of said endless conveyer and operating parallel thereto, and having an upwardly-sloping portion at their stubbleward ends, the binder-deck overhanging at its receiving end the stubbleward portion of the endless conveyer and divided to admit the upwardly-inclined portion of said feed-bars, said bars at their most stubbleward position extending stubbleward a considerable distance beyond the vertical plane of the receiving edge of the binder-deck and reaching nearly to the vertical plane of the needle rock-shaft, substantially as set forth.

4. In combination with the endless belt-conveyer located at the forward part of the platform, and the fixed decking located at the rear part, the binder-deck in two parts, the forward part having its receiving edge overhanging the stubbleward portion of the endless belt and sloping upward therefrom, and the rear part having its receiving edge secured to the fixed decking and sloping upward therefrom, and alternately-reciprocating feed-bars located and operating between the endless belt and the fixed decking and between the forward and rear parts of the binder-deck, substantially as set forth.

5. In a harvester, in combination with the two shafts c^4 and c^5, having each cranks ninety degrees apart, and the bars connecting corresponding cranks, the endless-belt conveyer D^{30}, having its driving-rollers at the grain side on the shaft c^5, substantially as set forth.

In testimony whereof I have hereunto set my hand, in the presence of two witnesses, at Chicago, Illinois, this 11th day of February, A. D. 1888.

LA VERNE W. NOYES.

Witnesses:
CHAS. S. BURTON,
E. F. BURTON.