(12) INTERNATIONAL APPLICATION PUBLISHED UNDER THE PATENT COOPERATION TREATY (PCT)

(19) World Intellectual Property Organization
International Bureau

(43) International Publication Date
19 September 2013 (19.09.2013)

WIPO | PCT

(10) International Publication Number
WO 2013/134809 A1

(51) International Patent Classification:
E04B 2/86 (2006.01) *E04G 11/06* (2006.01)

(21) International Application Number:
PCT/AU2012/000261

(22) International Filing Date:
13 March 2012 (13.03.2012)

(25) Filing Language: English

(26) Publication Language: English

(72) Inventor; and
(71) Applicant : **BLAIR, Philip** [NZ/AU]; 8 Braden Way, Marmion, Western Australia 6020 (AU).

(81) **Designated States** *(unless otherwise indicated, for every kind of national protection available)*: AE, AG, AL, AM, AO, AT, AU, AZ, BA, BB, BG, BH, BR, BW, BY, BZ, CA, CH, CL, CN, CO, CR, CU, CZ, DE, DK, DM, DO, DZ, EC, EE, EG, ES, FI, GB, GD, GE, GH, GM, GT, HN, HR, HU, ID, IL, IN, IS, JP, KE, KG, KM, KN, KP, KR, KZ, LA, LC, LK, LR, LS, LT, LU, LY, MA, MD, ME, MG, MK, MN, MW, MX, MY, MZ, NA, NG, NI, NO, NZ, OM, PE, PG, PH, PL, PT, QA, RO, RS, RU, RW, SC, SD, SE, SG, SK, SL, SM, ST, SV, SY, TH, TJ, TM, TN, TR, TT, TZ, UA, UG, US, UZ, VC, VN, ZA, ZM, ZW.

(84) **Designated States** *(unless otherwise indicated, for every kind of regional protection available)*: ARIPO (BW, GH, GM, KE, LR, LS, MW, MZ, NA, RW, SD, SL, SZ, TZ, UG, ZM, ZW), Eurasian (AM, AZ, BY, KG, KZ, MD, RU, TJ, TM), European (AL, AT, BE, BG, CH, CY, CZ, DE, DK, EE, ES, FI, FR, GB, GR, HR, HU, IE, IS, IT, LT, LU, LV, MC, MK, MT, NL, NO, PL, PT, RO, RS, SE, SI, SK, SM, TR), OAPI (BF, BJ, CF, CG, CI, CM, GA, GN, GQ, GW, ML, MR, NE, SN, TD, TG).

Published:

— *with international search report (Art. 21(3))*

WO 2013/134809 A1

(54) **Title**: A SHUTTER BLOCK USED IN A METHOD OF CONCRETE CONSTRUCTION

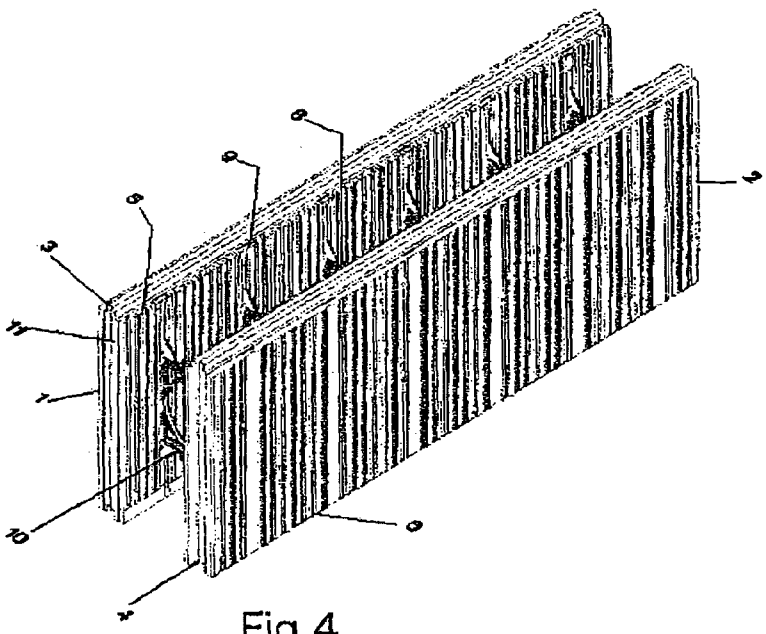

Fig 4

(57) **Abstract**: A shutter block, the shutter block including two regular spaced shutter walls (1, 2) each shutter wall has a continuous ridge on its top (5) and a continuous recess (4) at the bottom. Insert Fig (9) are molded in during production. The central bridge connector is used to connect the shutter walls: the central bridge has recesses (8) to support reinforcing rods. One or more dividers fig (8) can be used to close off any open ends of the shutter block or can be used to create sections within the block. The placement of one or more individual shutter blocks together will from large shutter walls, joined by one or more connector bridges adapted to hold reinforcing rods relative to the top and bottom of a connector bridge.

Examples of the invention will now be described with reference to the accompanying drawings in which:

Figure 1 shows a side elevational view of a shutter wall (being part of an example of the invention);

Figure 2 shows a plan view of a pair of shutters walls linked by webs to form an example of shutter block according to the invention;

Figure 3 shows and end elevational view of the shutter walls shown in Figure 2 with a web joining them together;

Figure 4 shows a perspective view of the shutter block according to the invention;

Figure 5 shows a plan view of a divider unit for the shutter block shown in Figure 2;

Figure 6 shows an end view of the divider shown in Figure 5;

Figure 7 shows a side view of the divider shown in Figure 5 and 6;

Figure 8 shows an isometric view of the end wall or divider shown in Figures 7 and 8;

Figure 9 shows a side view, partly formed, of a web for the shutter block shown in Figure 2;

Figure 10 shows a sectional end view of the formed web in Figure 9;

Figure 11 shows an isometric view of the formed web shown in Figures 9 and 10;

Figure 12 shows a built up version of the web for the fully moulded shutter block shown in figure 13

Figure 13 shows a perspective view of the fully moulded shutter block

Figure 14 shows a plan view of a right turn corner block according to the invention;

Figure 15 shows an elevational corner block shown in Figure 14;

Figure 16 shows an elevational view of the corner block shown in Figure 14 and 15;

Figure 17 shows an isometric view of the corner block in Figures 14 and 15;

As shown in figures 1 to 4 of the drawings the shutter block consists of two regularly spaced shutter walls 1, 2 of equal similar dimensions.

The internal face of each shutter walls 1, 2 include a plurality of similarly dimensioned and dove-tail shaped anchoring grooves 5. The dove tailed grooves 5 are grouped in sets of four 5 and the sets are spaced regularly along the shutter walls. The shutter walls 1, 2 are joined by webs (shown in detailed in Figures 10 to 12) positioned at intervals along the shutter walls between the sets of grooves 5. The space between each individual dove- tail groove 8 of a set 5.

Each shutter wall 1, 2 has on its top or bottom face a continuous ridge 3 or continuous recess 4 (Figure 3). Where the shutter wall 1, 2 has the continuous recess 4 on its top the bottom will have

the continuous ridge 3. The continuous ridge 3 is of such a proportion that it fits in the continuous recess 4 of a similar shutter wall above or below.

The outer face 6 and end face 11 of each shutter wall 1, 2 are preferably corrugated. The shutter walls 1, 2 can be connected by at least one of the webs Figure 10 or Figure 12. The webs Figure 10 or Figure 12 join the two shutter walls 1, 2 and have a width of a smaller dimension than the overall width of the pair of shutter wall 1, 2 as shown in Figures 2, 3 and 4.

The webs Figure 11 made of plastic. The configuration of an example of the web is shown in Figures 9 to 11. Figure 10 is showing the centre bridge before it is slid into two regular Figure 9 side inserts for accurate positioning to form the completely assembled web.

The web Figure 12 made of plastic. The configuration is similar of the web Figure 11, is fully moulded in to the shutter walls 1, 2 during production and completely assembled web Figure 12.

The web Figure 10 or 12 includes a number of radius reinforcing supports similar sites for the fixing of reinforcing rods. The sites 8 top and bottom include radius reinforcing supports so that a reinforcing rod of a smaller diameter than the recess formed between the sites 8 top and bottom. It should be appreciated that there may be variations in the number and placements of the sites so long as there is at least one site on the top and bottom of the web Figure 10 and 12.

The web Figure 10 and 12 is further configured to include a number of radius reinforcing supports 8 top and bottom for fixing one or more reinforcing rods (not shown) to enable a bond beam to be formed when the space between the shutter walls is filled with concrete. Any reinforcing held in reinforcing supports 8 top and bottom is held in position by wire ties (not shown).

The top or bottom face 14, 15 of a divider Figure 8 or end wall (Figures 5 to 8) has a single anchoring ridge 14 or a single anchoring recess 15. Where a divider Figure 8 has the single anchoring ridge 14 on its bottom face it has on its top face the single anchoring recess 15. The single anchoring ridge 14 is of such a proportion that it fits in the single anchoring recess. The side faces 13 of the divider Figure 8 are dove-tailed grooves 5 of a shutter wall. The divider Figure 8 can be inserted so that the single anchoring ridge 14 on the top of the divider Figure 8 corresponds to the continuous ridge 3 on top of the shutter wall. Another option is for the single anchoring recess 15 on the top of a divider Figure 8 to correspond to the continuous recess on the top of a shutter wall.

In use a shutter block is formed by positioning at least one web in a mould, before two shutter walls are formed by heating polystyrene balls placed in a mould. A divider is formed by heating a mould filled with polystyrene beads for an end wall.

In Figures 14 to 17 is shown an example of corner shutter block 17. This construction of block has similar Figure 11 to the webs shown in Figures 9 to 12. The overall length of the walls 1, 3 are modular lengths of a standard block shown in Figure 4. This enables a standard block wall configuration to be built with the blocks.

The internal walls 1, 2 of the Figure 17 have dovetail grooves 5 in a similar format to that of the standard block. Similarly the upper edge 5 has a ridge while the lower edge 4 has a complementary recess.

In use after a floor slab has been poured in situ a plurality of the shutter blocks are positioned in place leaving spaces for windows and doors. These spaces may be relatively easily formed to plan dimensions by cutting the polystyrene material as required. Dividers are positioned where necessary to close off any open ends of the blocks.

After reinforcing is placed in position and tied down as required the space between the walls of the blocks is filled with an appropriate concrete mix. The exterior and interior can then be finished off with an outer plaster or similar coating as required or by the placement of an interior lining like plaster board on the inside shutter wall.

In use the erected blocks walls can be stabilised by reusable bracing formed from galvanised iron metal sections which are mounted alongside an inner face of the erected walls with angled sections tied or braced down to the floor slab and fixed by screw bolts or like to the floor pad.

The exterior wall of the blocks being tied by wire ties to the inside bracing to from a rigid framework for a concrete pour in the blocks.

The shutter blocks form a structure that is braced to create two storey structures as well as a single storey structure.

It is possible to use the shutter block for a range of construction or structures which include concrete walls, these include residential, commercial and industrial buildings.

It is possible that by combining all of the above elements to produce a shutter block which may be used with reinforcing rods in concrete construction.

It is to be understood that the scope of the invention is not limited to be described embodiments and therefore that numerous variations and modification may be made to these embodiments without departing from the scope of the invention as set out in this specification and the appended claims.

CLAIMS:

1. A shutter block, the shutter block including two regularly spaced shutter walls, each shutter wall has a continuous ridge on its top and a continuous recess in its bottom, webs are used to connect the shutter walls and the webs are adapted to hold reinforcing rods relative to either the top and / or the bottom of the web.
2. A shutter block as claimed in claim 1 wherein the internal faces of the shutter walls include shaped grooves in which complementary parts of a divider can fit to close an open and of the shutter or to create a section within the shutter block.
3. A shutter block as claimed in claim 2 wherein the shape grooves are dove-tailed or approximately dove-tailed with curved edges.
4. A shutter block as claimed in any one of the preceding claims wherein the shutter walls are corrugated on their outer and end faces.
5. A shutter block as claimed in any one of the preceding claims wherein the shutter walls are constructed from polystyrene.
6. A shutter block as claimed in any one of the preceding claims wherein the webs are constructed from a plastic material.
7. A shutter block substantially as hereinbefore described with reference to the accompanying drawings.
8. A combination of different numbers and different shapes of shutter blocks as claimed in any one of the preceding claims which create a preferred shape of concrete construction.
9. A combination as claimed in claim 8 wherein one or more dividers can be used to close the, or any, open ends of the shutter blocks or can be used to create sections within the shutter block.
10. A means of manufacturing a shutter block in which the web is placed between two moulds for the shutter walls which have been filled with polystyrene balls or a similar material, the polystyrene balls in the mould being heated and expanded to form the two shutter walls joined by at least one web.
11. A means as claimed in claim 10 wherein a mould filled with polystyrene balls is heated to form a divider or end closure.
12. A means as claimed in claim 10 or claim 11 wherein the shutter walls and dividers are ejected from the moulds.
13. A means of manufacturing a shutter block as claimed in claim 10 and substantially as hereinbefore described with reference to the accompanying drawings.

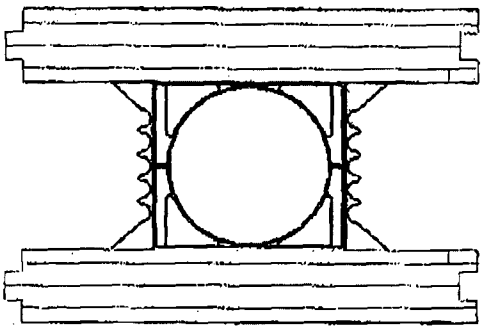

Fig 3

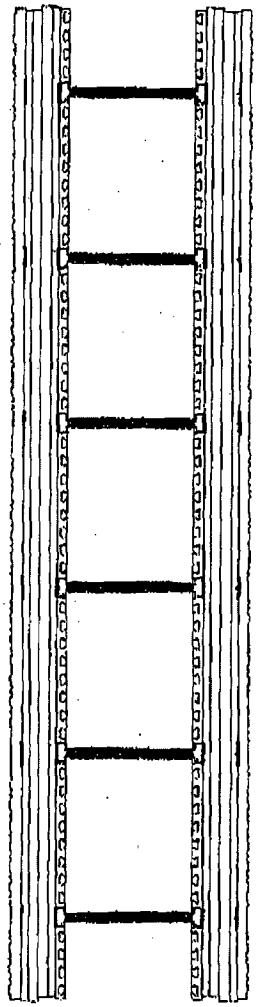

Fig 2

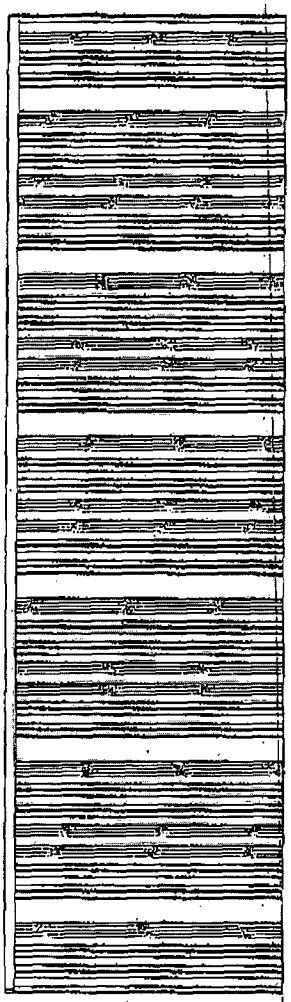

Fig 1

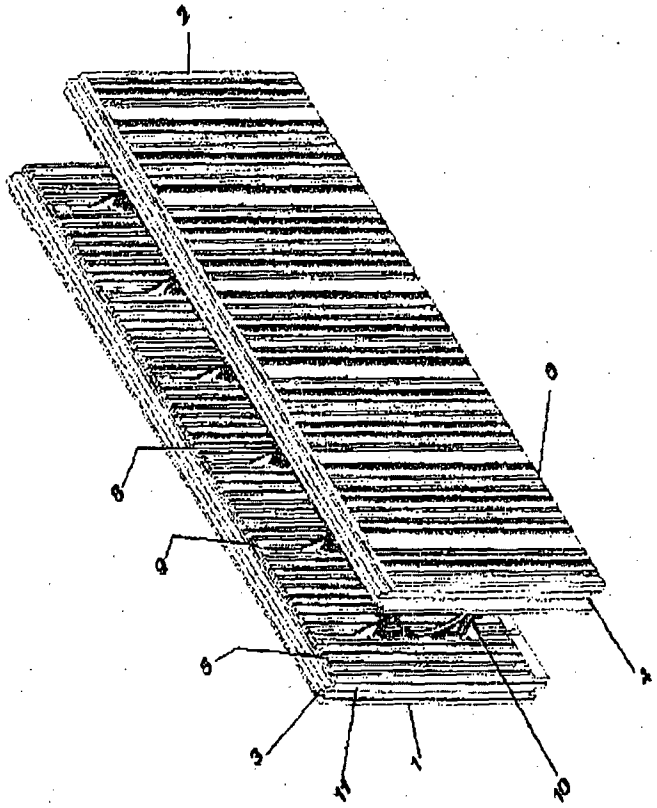

Fig 4

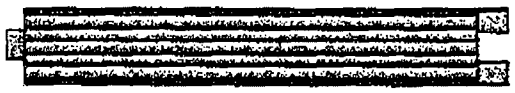

Fig 6

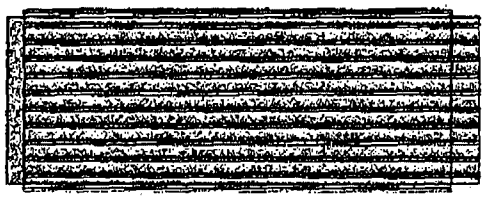

Fig 7

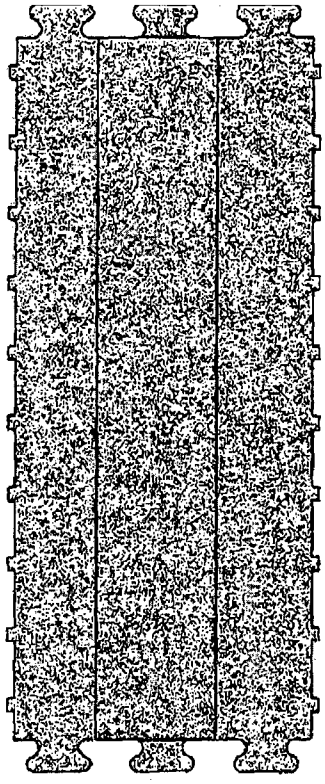

Fig 5

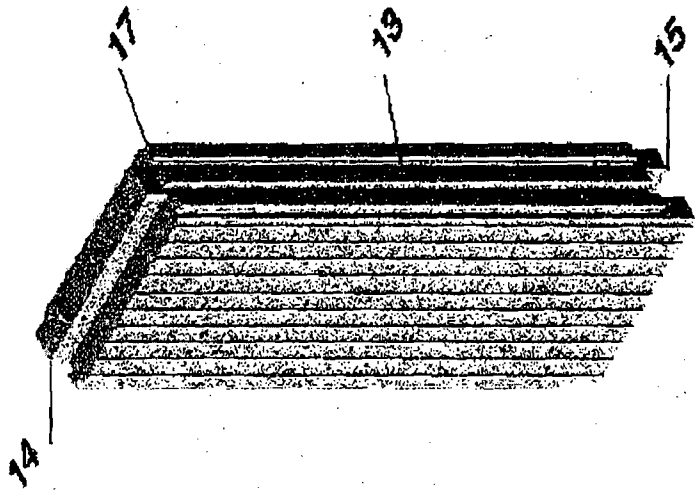

Fig 8

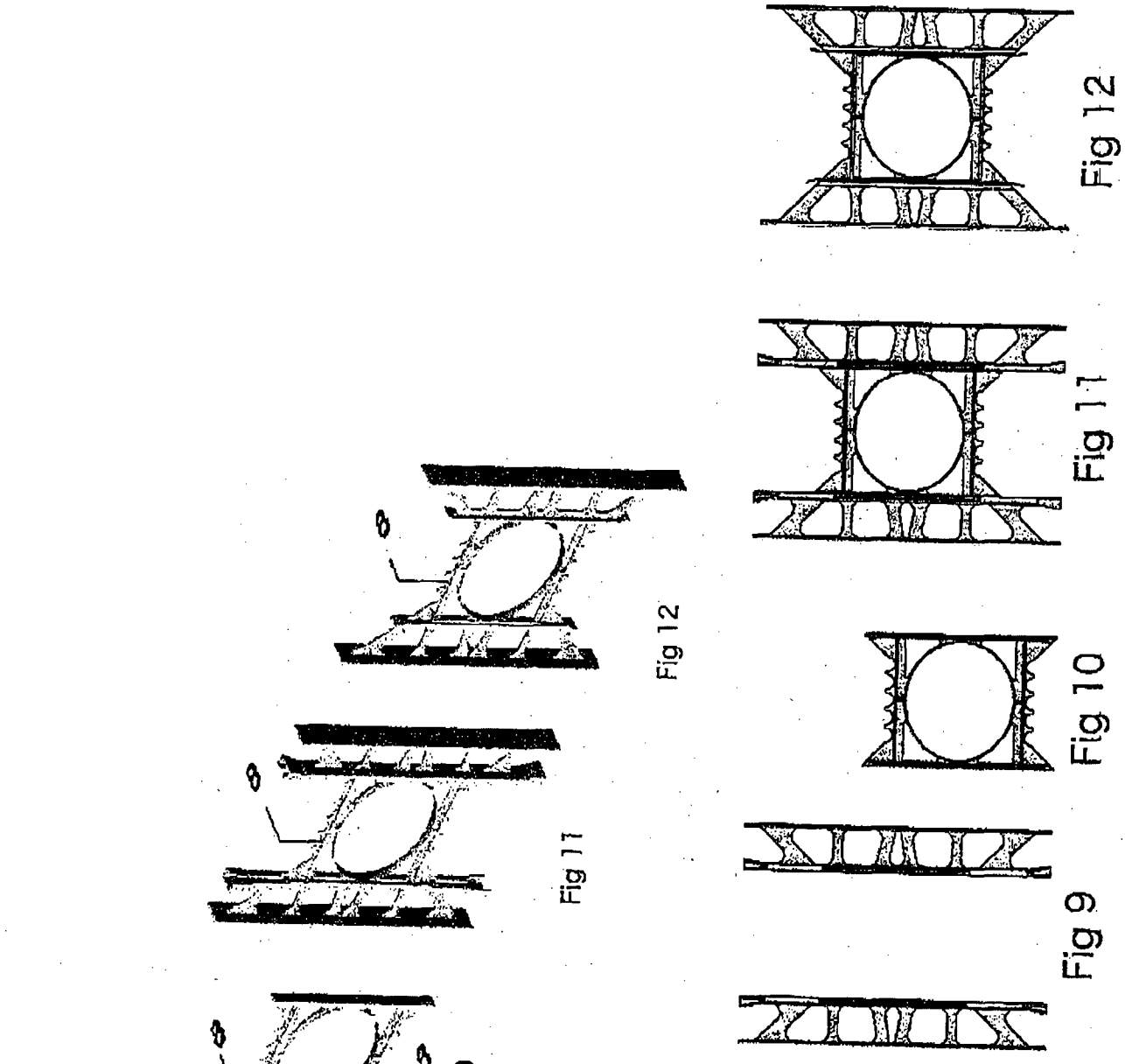

Fig 9

Fig 10

Fig 11

Fig 12

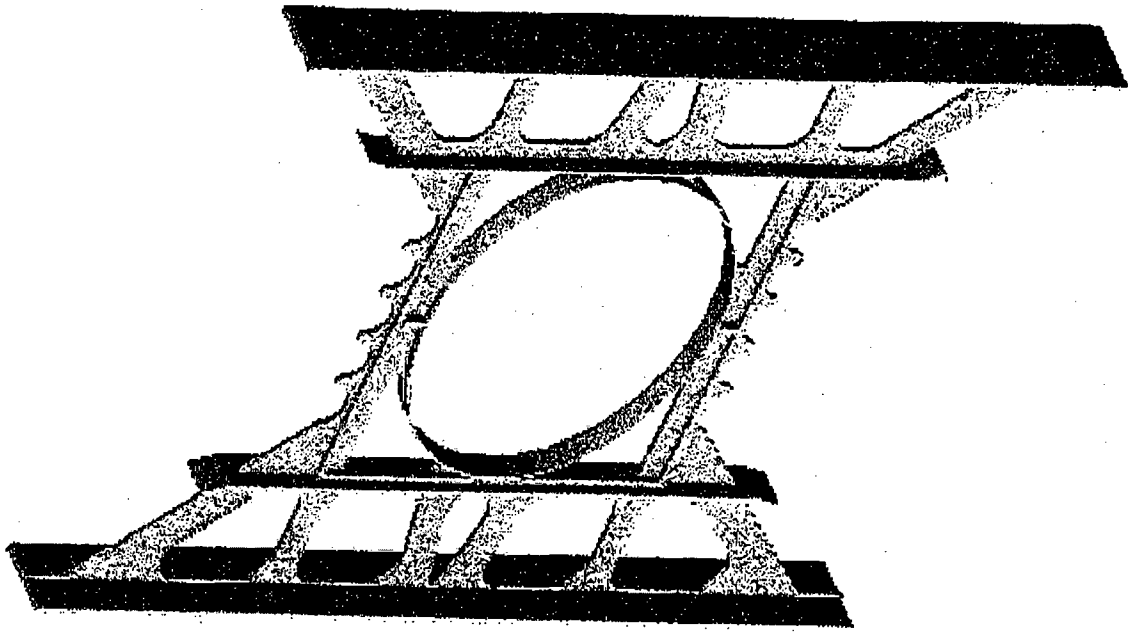

Fig 12

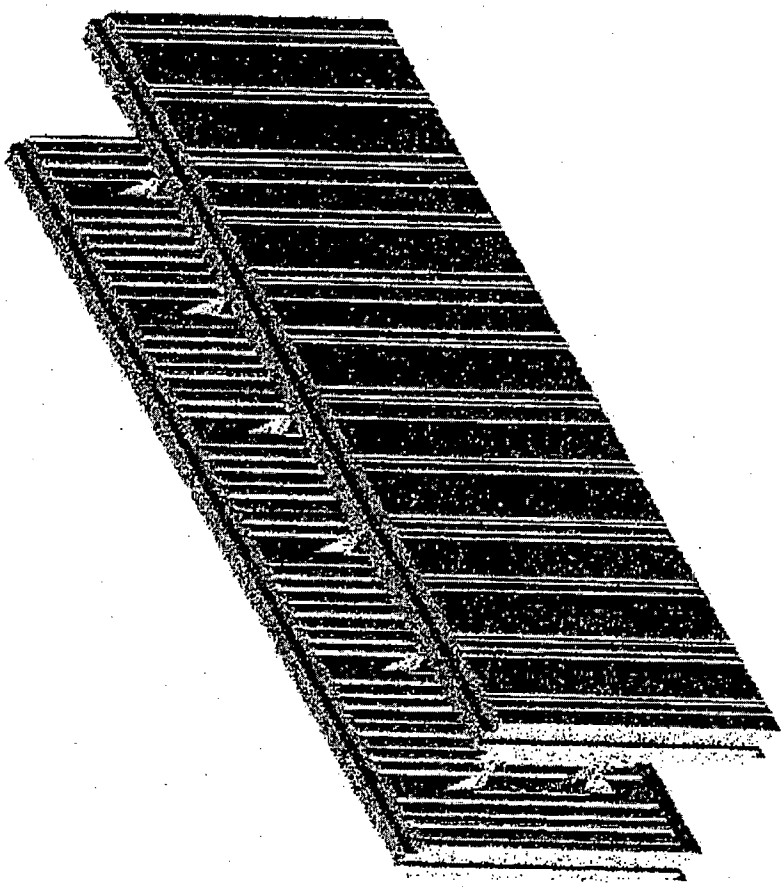

Fig 13

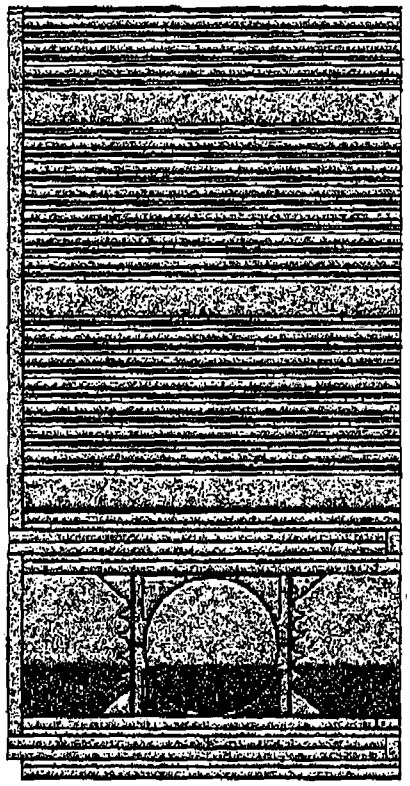

Fig 15

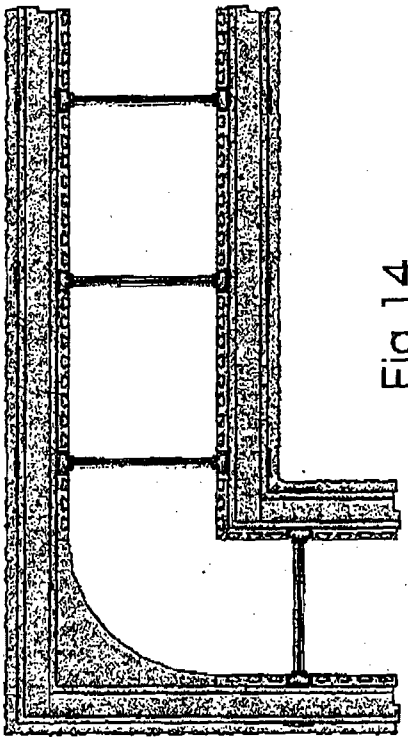

Fig 14

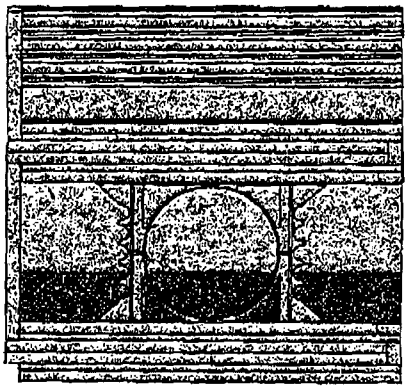

Fig 16

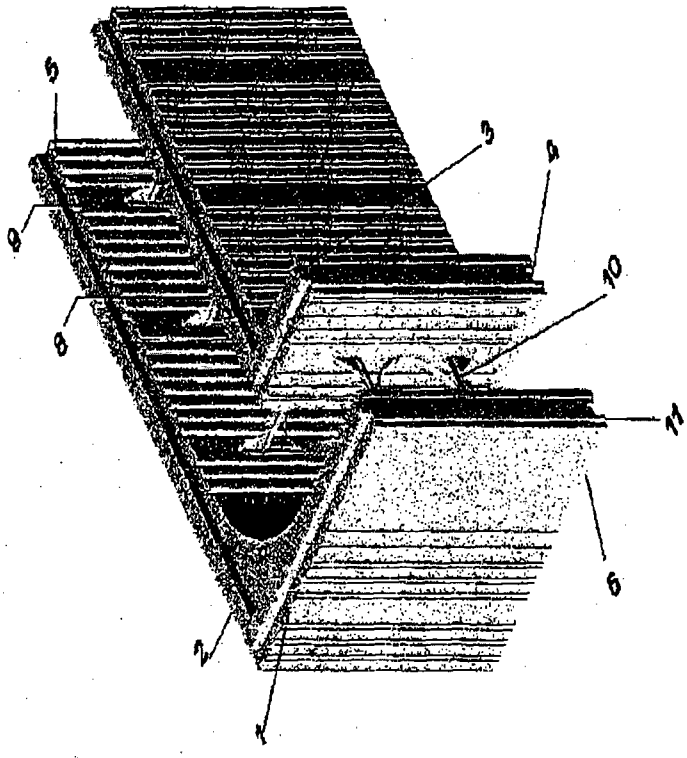

Fig 17

INTERNATIONAL SEARCH REPORT

International application No.
PCT/AU2012/000261

A. CLASSIFICATION OF SUBJECT MATTER

Int. Cl.

E04B 2/86 (2006.01) ***E04G 11/06*** (2006.01)

According to International Patent Classification (IPC) or to both national classification and IPC

B. FIELDS SEARCHED

Minimum documentation searched (classification system followed by classification symbols)

Documentation searched other than minimum documentation to the extent that such documents are included in the fields searched

Electronic data base consulted during the international search (name of data base and, where practicable, search terms used)
ESPACENET – ECLA, E04B 2/86E1, 2/86G, 2/86G1 and keywords (reinforce, rebar, polystyrene) and like terms;
WPI & EPODOC – IPC & ECLA, E04B 2/86/low, E04G 11/00, E04G 11/06 and keywords (reinforce, rebar, web, tie, spacer, bridge, connector, slide) and like terms.

C. DOCUMENTS CONSIDERED TO BE RELEVANT

Category*	Citation of document, with indication, where appropriate, of the relevant passages	Relevant to claim No.
X	WO 1995/012720 A1 (BLAIR) 11 May 1995 Whole of document, especially claims 1 to 5 and 7 to 13	1-5,8-12
X	US 2005/0028467 A1 (BENTLEY) 10 February 2005 Figs. 1 to 5, 12, 13a & 13b, paragraph [0032]	1,5,6,8

☐ Further documents are listed in the continuation of Box C ☒ See patent family annex

* Special categories of cited documents:

"A" document defining the general state of the art which is not considered to be of particular relevance

"E" earlier application or patent but published on or after the international filing date

"L" document which may throw doubts on priority claim(s) or which is cited to establish the publication date of another citation or other special reason (as specified)

"O" document referring to an oral disclosure, use, exhibition or other means

"P" document published prior to the international filing date but later than the priority date claimed

"T" later document published after the international filing date or priority date and not in conflict with the application but cited to understand the principle or theory underlying the invention

"X" document of particular relevance; the claimed invention cannot be considered novel or cannot be considered to involve an inventive step when the document is taken alone

"Y" document of particular relevance; the claimed invention cannot be considered to involve an inventive step when the document is combined with one or more other such documents, such combination being obvious to a person skilled in the art

"&" document member of the same patent family

Date of the actual completion of the international search	Date of mailing of the international search report
08 May 2012	21 May 2012
Name and mailing address of the ISA/AU AUSTRALIAN PATENT OFFICE PO BOX 200, WODEN ACT 2606, AUSTRALIA E-mail address: pct@ipaustralia.gov.au Facsimile No. +61 2 6283 7999	Authorized officer **STEPHEN MARCHANT** AUSTRALIAN PATENT OFFICE (ISO 9001 Quality Certified Service) Telephone No : +61 2 6283 2533

INTERNATIONAL SEARCH REPORT

International application No.
PCT/AU2012/000261

Box No. II Observations where certain claims were found unsearchable (Continuation of item 2 of first sheet)

This international search report has not been established in respect of certain claims under Article 17(2)(a) for the following reasons:

1. ☐ Claims Nos.:
because they relate to subject matter not required to be searched by this Authority, namely:

2. ☒ Claims Nos.: **7 & 13**
because they relate to parts of the international application that do not comply with the prescribed requirements to such an extent that no meaningful international search can be carried out, specifically:

The claims do not comply with Rule 6.2(a) because they rely on references to the description and/or drawings.

3. ☐ Claims Nos.:
because they are dependent claims and are not drafted in accordance with the second and third sentences of Rule 6.4(a)

Box No. III Observations where unity of invention is lacking (Continuation of item 3 of first sheet)

This International Searching Authority found multiple inventions in this international application, as follows:

[See Supplemental Box]

1. ☐ As all required additional search fees were timely paid by the applicant, this international search report covers all searchable claims.
2. ☒ As all searchable claims could be searched without effort justifying additional fees, this Authority did not invite payment of additional fees.
3. ☐ As only some of the required additional search fees were timely paid by the applicant, this international search report covers only those claims for which fees were paid, specifically claims Nos.:
4. ☐ No required additional search fees were timely paid by the applicant. Consequently, this international search report is restricted to the invention first mentioned in the claims; it is covered by claims Nos.:

Remark on Protest

☐ The additional search fees were accompanied by the applicant's protest and, where applicable, the payment of a protest fee.

☐ The additional search fees were accompanied by the applicant's protest but the applicable protest fee was not paid within the time limit specified in the invitation.

☐ No protest accompanied the payment of additional search fees.

Supplemental Box
(To be used when the space in any of Boxes I to IV is not sufficient)

Continuation of Box No: III Observations where unity of invention is lacking

This International Application does not comply with the requirements of unity of invention because it does not relate to one invention or to a group of inventions so linked as to form a single general inventive concept.

This Authority has found that there are different inventions based on the following features that separate the claims into distinct groups:

- Claims 1 to 9 are directed to a shutter block. The features of the ridge and recess and the webs adapted to hold reinforcing rods are specific to this group of claims.

- Claims 10 to 13 are directed to a means of manufacturing a shutter block. The feature of the web being placed between two moulds and the moulding process is specific to this group of claims.

PCT Rule 13.2, first sentence, states that unity of invention is only fulfilled when there is a technical relationship among the claimed inventions involving one or more of the same or corresponding special technical features. PCT Rule 13.2, second sentence, defines a special technical feature as a feature which makes a contribution over the prior art.

When there is no special technical feature common to all the claimed inventions there is no unity of invention.

In the above groups of claims, the identified features may have the potential to make a contribution over the prior art but are not common to all the claimed inventions and therefore cannot provide the required technical relationship. The only feature common to all of the claimed inventions and which provides a technical relationship among them is a shutter block having two spaced walls with an interconnecting web. However this feature does not make a contribution over the prior art because it is disclosed in:

D1: WO 1995/012720 A1 (BLAIR) 11 May 1995

Therefore in the light of this document this common feature cannot be a special technical feature. Therefore there is no special technical feature common to all the claimed inventions and the requirements for unity of invention are consequently not satisfied a posteriori.

INTERNATIONAL SEARCH REPORT

Information on patent family members

International application No.

PCT/AU2012/000261

This Annex lists the known "A" publication level patent family members relating to the patent documents cited in the above-mentioned international search report. The Australian Patent Office is in no way liable for these particulars which are merely given for the purpose of information.

Patent Document Cited in Search Report		Patent Family Member					
WO	9512720	AU	80687/94	CA	2175930	CN	1134736
		EP	0737263	JP	H08504911	NZ	275168
		SG	46574				
US	2005028467	AU	80982/98	CA	2209251	CA	2294823
		CN	1265170	EP	0996793	US	2003213198
		WO	9901626				

Due to data integration issues this family listing may not include 10 digit Australian applications filed since May 2001.

END OF ANNEX