April 21, 1925. 1,534,630

R. L. AVERY

SCHOOL FURNITURE

Original Filed July 20, 1921

Fig. 1

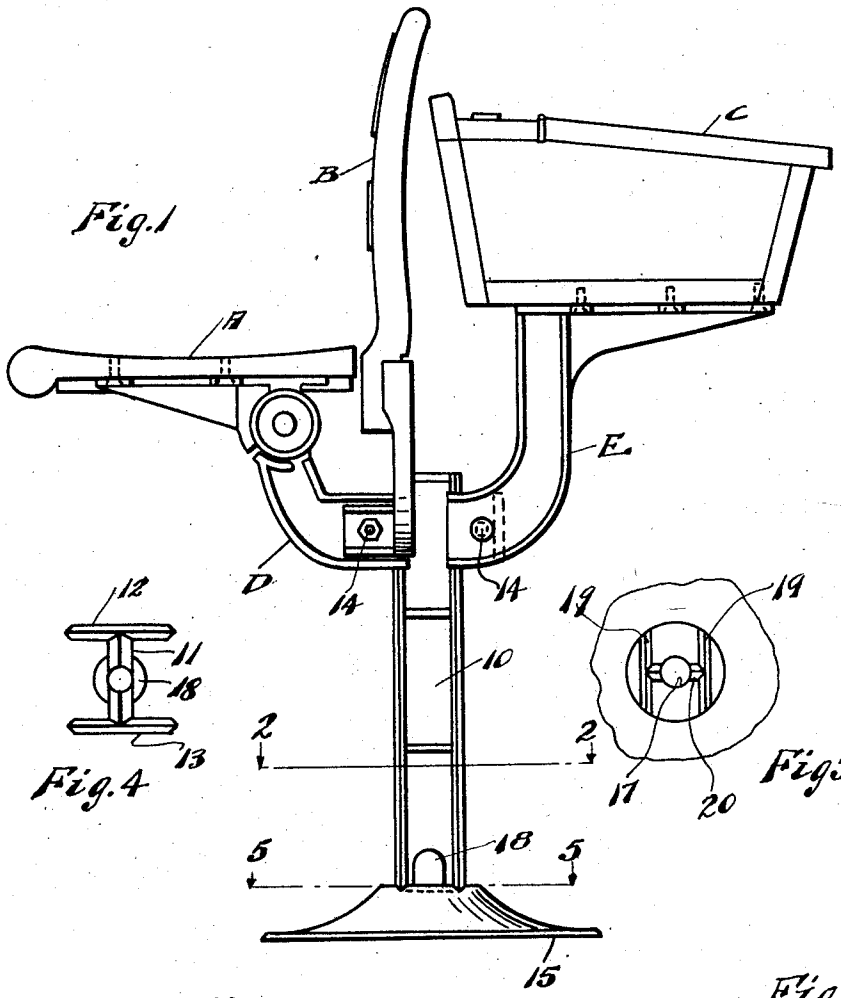

Fig. 4

Fig 5

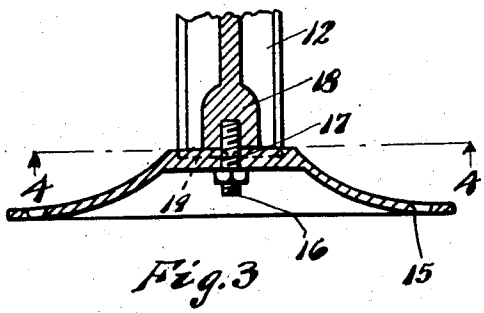

Fig. 3

Fig. 2

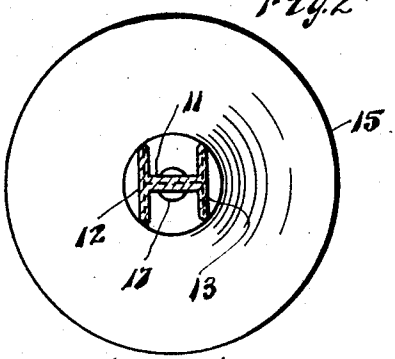

Witnesses:
C. E. Mosely
Wm. Schmeltzer

Inventor
Roger L. Avery
By Joshua R. H. Potts
His Attorney

Patented Apr. 21, 1925. 1,534,630

UNITED STATES PATENT OFFICE.

ROGER L. AVERY, OF CHICAGO, ILLINOIS.

SCHOOL FURNITURE.

Original application filed July 20, 1921, Serial No. 486,167. Divided and this application filed January 8, 1923. Serial No. 611,384.

To all whom it may concern:

Be it known that I, ROGER L. AVERY, a citizen of the United States, and a resident of the city of Chicago, county of Cook, and State of Illinois, have invented certain new and useful Improvements in School Furniture, of which the following is a specification.

My invention relates to new and useful improvements in school furniture, and has for its principal object the provision of an improved construction of this character which will be highly efficient in use, the present application being a division of my prior application for school furniture filed July 20, 1921, Serial No. 486,167.

The invention, which will be more fully understood from the description to follow, relates especially to the base and support for the desk and seat of the fixture and is designed in such a manner as to permit convenient sweeping and dusting around the base and support, there being but a single upright support for the desk and seat and a dish-shaped base on which the support rests. It is also the object of the invention to provide a base for the support whereby the support can be readily fixed to the base and prevented by grooves formed in the base from rotating should the means for attaching the support to the base become accidentally loose.

Other objects will appear hereinafter.

The invention consists in the combinations and arrangements of parts hereinafter described and claimed.

The invention will be best understood by reference to the accompanying drawings forming a part of this specification, and in which,

Fig. 1 is a side elevational view of a combination desk and seat embodying the invention;

Fig. 2 is a sectional detail view, of the same, taken substantially on line 2—2 of Fig. 1;

Fig. 3 is a fragmentary sectional detail view of the desk and seat support and the base therefor;

Fig. 4 is a bottom plan view of the support, taken substantially on line 4—4 of Fig. 3; and

Fig. 5 is a top plan view of the base for the desk and seat support and taken substantially on line 5—5 of Fig. 1.

In the drawing, A indicates a seat, B a back rest for the seat, C the desk, and D and E, supports for the seat and desk respectively.

The supports D and E are adjustably mounted on an upright support or pedestal 10, I-shaped in cross section, comprising a web 11 and oppositely arranged flanges 12 and 13, said supports being adapted to embrace the flanges 12 and 13 and adapted to be secured in the desired adjusted position by means of bolts 14.

The construction so far disclosed is embodied in my prior application for school furniture filed July 20, 1921, Serial No. 486,167, and it is only mentioned here so that the present invention can be more fully understood.

The pedestal indicated above and illustrated in the drawing is adapted to be mounted on a base 15 which in this instance is in the shape of a dish adapted to be inverted when attached to the floor and is attached to the pedestal by means of a stud bolt 16 which is screw-threaded through a central opening 17 formed in the base and screw-threaded in a socket 18 formed in the lower end of the web 11. The base engaging edges of the flanges 12 and 13 are bevelled as shown in Fig. 4 and adapted to seat in parallel grooves 19 formed in the base 15 as shown in Fig. 5, said grooves 19 being triangularly shaped in cross section. The base engaging edge of the web 11 is also bevelled and adapted to seat in a groove 20 terminating in the grooves 19 and also triangularly in shape in cross section. This construction is such that when the bevelled edges of the pedestal 10 are seated in the grooves 19 and 20 of the base, the support is prevented from rotating should the means of attaching the base to the pedestal become accidentally loose, that is to say the bolt 16. This construction also facilitates the mounting of the pedestal on the base and assures a rigid connection inasmuch as the stud bolt 16 is threaded through the opening 17 and the socket 18.

By my improved school furniture I not only provide a desk and seat support and base which will be economical in manufacture, but will also be perfectly sanitary, permitting ready access to the base and seat and desk support and the floor around the base with a brush or duster.

While I have illustrated and described the preferred form of construction for carrying my invention into effect, this is capable of variation and modification without departing from the spirit of the invention. I, therefore, do not wish to be limited to the precise details of construction set forth, but desire to avail myself of such variations and modifications as come within the scope of the appended claims.

Having described my invention, what I claim as new and desire to secure by Letters Patent is:

1. In a school desk comprising in combination with a desk and seat, of an I-shaped support therefor with wedge-shaped lower edges; a base having parallel wedge-shaped grooves formed therein for the reception of the edges of said support; and means for attaching said base to said support, substantially as described.

2. In a school desk comprising in combination with a desk and seat, of a supporting pedestal therefor having a socket formed in one end thereof and having parallel wedge-shaped lower edges; a base for said pedestal, said base having triangular parallel wedge-shaped grooves and a wedge-shaped connecting groove for the reception of the wedge-shaped edges of said pedestal; and means passing through said base and screw-threaded in said socket, substantially as described.

3. In a school desk comprising in combination with a desk and seat, of a pedestal for supporting said desk and seat, said pedestal having a socket formed in one end thereof and the edges of said end bevelled; a base for said pedestal, said base having parallel grooves and a groove terminating in said parallel grooves for the reception of the bevelled edges of said pedestal; and a stud bolt screw-threaded through said base and into said socket, substantially as described.

In testimony whereof I have signed my name to this specification in the presence of two subscribing witnesses.

ROGER L. AVERY.

Witnesses:

FREDA C. APPLETON,

CLARENCE E. THREEDY.