H. JONES.

MANHOLE FRAME AND COVER.

APPLICATION FILED APR. 24, 1915.

1,191,431. Patented July 18, 1916.

Fig. 1.

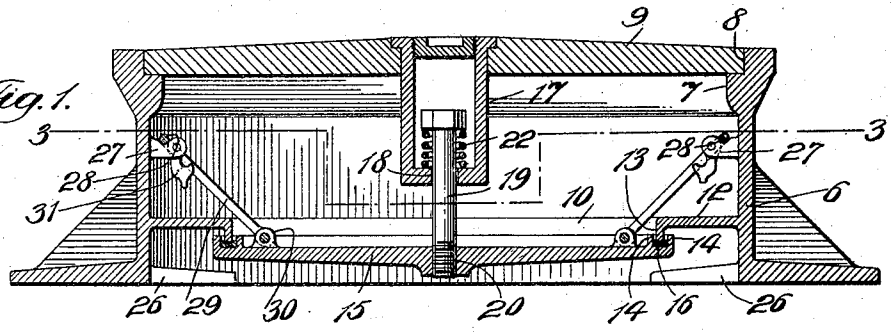

Fig. 2.

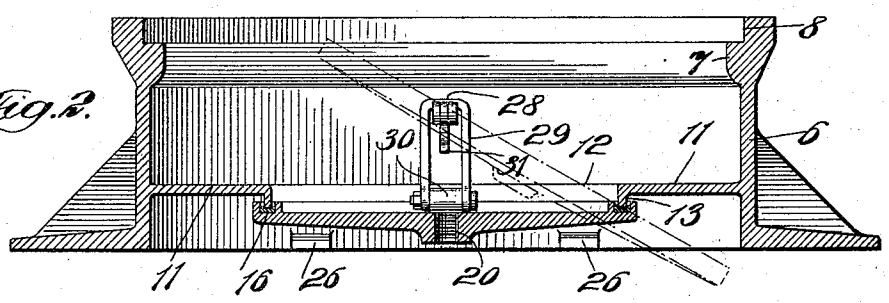

Fig. 3.

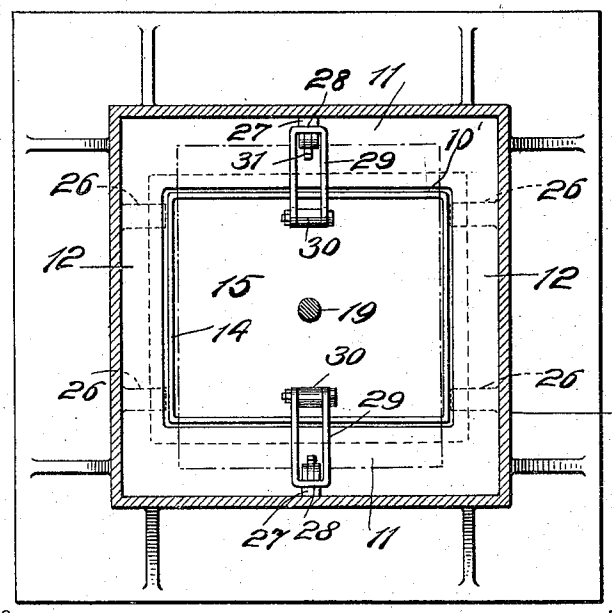

WITNESSES:

INVENTOR

HARRY JONES

BY

ATTORNEY

THE NORRIS PETERS CO., PHOTO-LITHO., WASHINGTON, D. C.

UNITED STATES PATENT OFFICE.

HARRY JONES, OF SUFFERN, NEW YORK, ASSIGNOR TO AMERICAN BRAKE SHOE & FOUNDRY COMPANY, OF MAHWAH, NEW JERSEY, A CORPORATION OF NEW JERSEY.

MANHOLE FRAME AND COVER.

1,191,431. Specification of Letters Patent. Patented July 18, 1916.

Application filed April 24, 1915. Serial No. 23,734.

To all whom it may concern:

Be it known that I, HARRY JONES, a citizen of the United States, and a resident of Suffern, in the county of Rockland and State of New York, have made and invented certain new and useful Improvements in Manhole Frames and Covers, of which the following is a specification.

This invention relates to a manhole frame and cover, and collectively considered, comprehends but few parts, and of simple arrangement, whereby a liquid-tight construction will be had and maintained, despite such jars and shocks as it will necessarily receive in service.

An object is to provide a manhole frame with top and supplemental cover plates which open in opposite directions, so that they may be drawn together by a single bolt and maintained in seated positions thereby, the supplemental cover being thus adapted to act in the capacity of a stay or strut for the securement of the top cover in place.

A further object is to provide a liquid-tight manhole frame and cover construction, wherein the top and supplemental covers open in opposite directions and are held in their seated positions by resilient and retractable means, which prevent the dislodgment of the supplemental cover, despite such jars and shocks as the top cover plate will necessarily receive.

A further object is to provide a manhole frame with a top cover, opening in an upward direction, and with a supplemental cover or pan, opening in the opposite or downward direction, which covers are held in seated positions by resilient means which extend therebetween. In addition to the resilient holding means, an auxiliary mechanism or device is provided, which is adapted to hold the supplemental cover in a seated position during the time the top cover is removed, so that any liquid which may have collected upon the supplemental cover will not escape upon the removal of the top cover.

Other objects and advantages will appear as the description proceeds, wherein it is to be understood that changes in the precise embodiment of the invention can be made within the scope of what is claimed without departing from the spirit of the invention.

The preferred embodiment of my invention is disclosed in the accompanying drawings, wherein:—

Figure 1 is a view in section of a manhole frame and covers, embodying the characteristic features of my invention. Fig. 2 is a sectional view similar to Fig. 1, but taken upon a plane at right angles to that of Fig. 1, and diagrammatically depicting the manner in which the supplemental cover or pan can be removed or replaced. Fig. 3 is a view in section taken on the line 3—3 of Fig. 1.

Referring to the several views, wherein similar reference numerals designate corresponding parts throughout, a frame 6 is provided at its upper and open extremity with an inwardly projecting ledge 7, which, in connection with the sides of the frame, which project thereabove, defines a continuous recess 8, preferably of square outline, and adapted to receive a top cover 9 therein.

Projecting inwardly from the sides of the frame 6, and preferably located adjacent the lower extremity thereof, is a continuous flange or seat 10, defining an aperture 10′. The portions 11 of the flange which extend along the two sides of the frame, project inwardly to a greater distance than the portions 12 which extend along the front and rear walls thereof, whereby the aperture is of rectangular outline. The innermost extremity of the flange or seat extends downwardly to form a continuous lip 13 which is adapted to project between the spaced flanges 14 of the supplemental cover or pan 15, and effect a water-tight juncture with a gasket 16 which is located between the said flanges. The supplemental cover conforms to the outline or configuration of the lip 13, preferably rectangular, and is so formed in order to facilitate the insertion of the supplemental cover through the frame and below the lip 13, and providing for its ready removal therefrom.

Projecting through and beneath the top cover 9, is the pocket member 17, through the lower extremity of which extends an opening 18, provided for the reception of the upper and headed extremity of a holding bolt 19. A compression spring 22 is positioned within the pocket member 17, and disposed below the head of the bolt 19, so as to resiliently hold the same spaced a distance above the bottom wall of the pocket

member 17. The lower extremity of the holding bolt threadedly engages an opening 20 provided in the supplemental cover, so that as the bolt is turned, the supplemental cover is resiliently and forcibly drawn into a seated position against the lip 13 with which it effects a liquid-tight juncture. At the same time, the top cover is drawn downwardly into its seated position, as disclosed in Fig. 1, and so held. A detachable plug 25 is threadedly secured in the upper extremity of the pocket member 17, and protects the bolt head which is located therein.

In order to facilitate the removal and replacement of the supplemental cover, the frame is provided at its lowermost extremity with the inwardly projecting spaced brackets or lugs 26, upon which the supplemental cover is adapted to rest prior to its engagement and securement by the holding bolt 19. The configuration of the supplemental cover and opening 10′ allows the cover to be inserted in place in the manner as illustrated in dotted lines in Fig. 2, wherein the supplemental cover is shown as being tilted, so as to pass down through the frame opening, and is also turned to a position at 90° with respect to the position it finally assumes when seated. This rotation or turning of the supplemental cover brings the shorter dimension thereof into a position extending lengthwise of the opening 10′, so that it may pass entirely through and beneath the flange opening, against the side walls of which it is subsequently adapted to seat. The supplemental cover, after its insertion through the opening 10′, rests upon the brackets 26, and while supported thereby, is rotated through 90°, so that the gasket 16 will be brought directly beneath the flange lip 13.

In addition to the holding action of the bolt 19, auxiliary means are provided so that the supplemental cover will be held in place in a seated position after the holding bolt 19 has been released and the top cover removed. This is effected in an expeditious manner by providing the manhole frame with the two inwardly projecting lugs 27, which are provided with suitable notches 28 into which the keepers 29 are adapted to seat. The keepers 29 are formed as loops pivotally secured as at 30 to the supplemental cover, and of such length and configuration as to pass over the forward extremities of the lugs 27 and seat within the notches 28. With the keepers so located, the supplemental cover is held in its seated position, preventing the egress of such liquids as may be present above the supplemental cover, as the top cover is removed. The lugs 27 are provided with the pawls 31 which are pivoted thereto and are adapted to engage the upper extremities of the keepers and aid in the passage of the keepers above the lugs and into their seated positions within said notches. The auxiliary holding means, as above referred to, are adapted to draw the supplemental cover into its seated position and retain the same so located. After the supplemental cover has been secured in place by the auxiliary holding means, the top cover is placed in position, and the holding bolt is passed down through the pocket member and threadedly secured to the supplemental cover. The compression spring member which is located beneath the head of the bolt, provides a resilient cushion against which the bolt head is drawn, whereby the top and supplemental covers are drawn together, resulting in the secure seating of the supplemental cover and insuring a liquid-tight juncture with the flange 10, and at the same time preventing the supplemental cover from being dislodged or jarred from its seated position by such jars and shocks as will necessarily be brought to bear upon the cover plate 9 during service. The auxiliary holding means are thus seated and aided by the holding bolt for securing the supplemental cover in a liquid-tight condition.

From the foregoing, it will be apparent that the holding bolt, while normally holding the supplemental cover in its closed position, may be removed, providing for the removal of the top cover without danger of such liquids as may be contained above the supplemental cover passing through the manhole frame.

What I claim is:—

1. An apparatus of the class described comprising a manhole frame, oppositely opening top and supplemental covers, a pocket member carried by said top cover, a bolt insertible through said pocket member and adapted to threadedly engage said supplemental cover, and resilient cushioning means disposed within said pocket member and located between said bolt and the bottom wall of said pocket member, said bolt adapted to resiliently draw said covers into their seated positions.

2. An apparatus of the class described comprising a manhole frame, oppositely opening top and supplemental covers, holding means extending between said covers and adapted to draw the same into their seated positions, and auxiliary holding means carried by said supplemental cover and detachably engaging the side walls of said manhole frame and adapted to hold said supplemental cover in its seated position upon the removal of said top cover.

3. An apparatus of the class described comprising a manhole frame, oppositely opening top and supplemental covers, holding means extending between said covers and adapted to draw the same into their seated positions, and auxiliary holding means including keepers pivotally carried by

said supplemental cover, and lugs carried by the sides of said frame and adapted to be engaged by said keepers.

4. An apparatus of the class described, comprising a manhole frame with upwardly extending side walls, an upwardly removable top cover therefor, said top cover provided with an opening therein, a pocket member located within said top cover opening and terminating substantially flush therewith, a downwardly removable supplemental cover disposed between the side walls of said frame, and means disposed within, and extending through, said pocket member of the top cover, engaging said supplemental cover and adapted to draw the two into seated positions.

5. An apparatus of the class described comprising a manhole frame with upwardly extending side walls, and a ledge adjacent the lower extremity thereof, an upwardly removable top cover therefor, a downwardly removable supplemental cover seating against said ledge, said top cover provided with an opening therein, a pocket member disposed within said opening and extending below said top cover, a closing plug for said pocket member, and means extending through, and engaging, said pocket member and said supplemental cover, adapted to draw said top cover and supplemental cover into seated positions.

Signed at Suffern in the county of Rockland and State of New York.

HARRY JONES.

Witnesses:
GEORGE F. SMITH,
CLIFFORD ARMITAGE.

Copies of this patent may be obtained for five cents each, by addressing the "Commissioner of Patents, Washington, D. C."