Dec. 27, 1938. W. D. KIMBALL ET AL 2,141,212

PACKAGE COLLECTOR

Filed Feb. 18, 1938 4 Sheets-Sheet 1

Fig. 1.

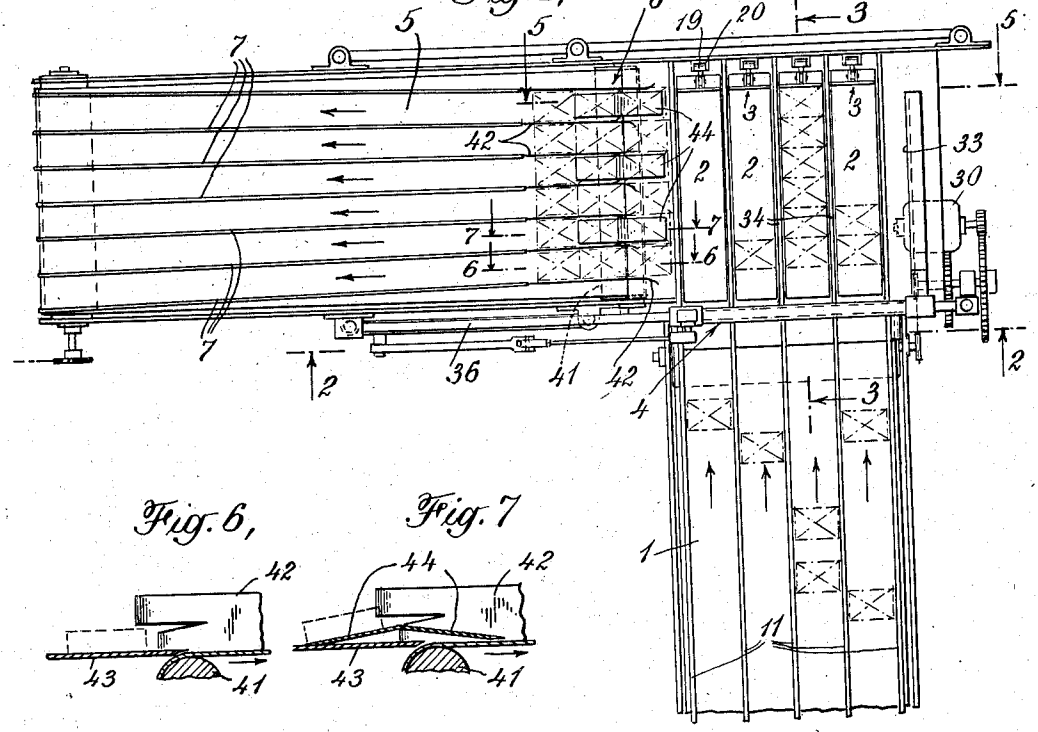

Fig. 6.

Fig. 7

Fig. 2.

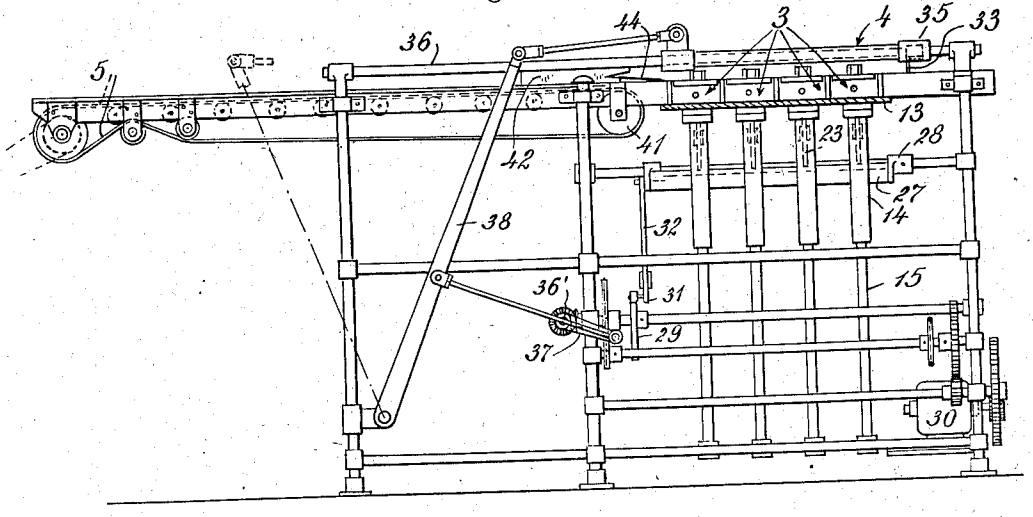

INVENTORS
Wallace D. Kimball and
Cornelius I. Braren
BY
Pennie, Davis, Marvin and Edmonds
THEIR ATTORNEYS

Dec. 27, 1938. W. D. KIMBALL ET AL 2,141,212

PACKAGE COLLECTOR

Filed Feb. 18, 1938 4 Sheets-Sheet 2

Fig. 4,

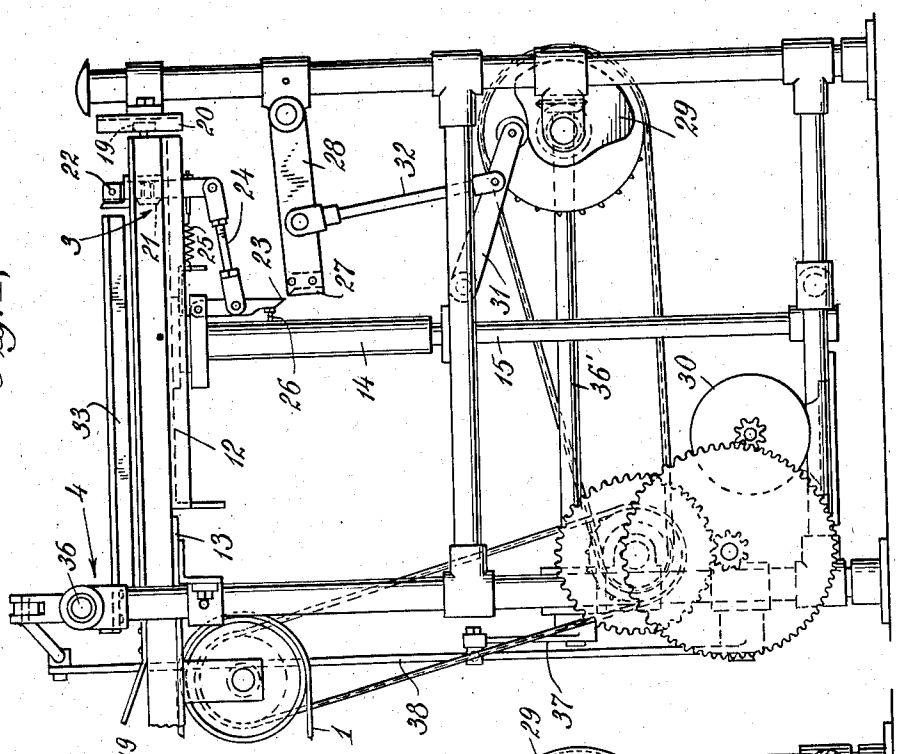

Fig. 3,

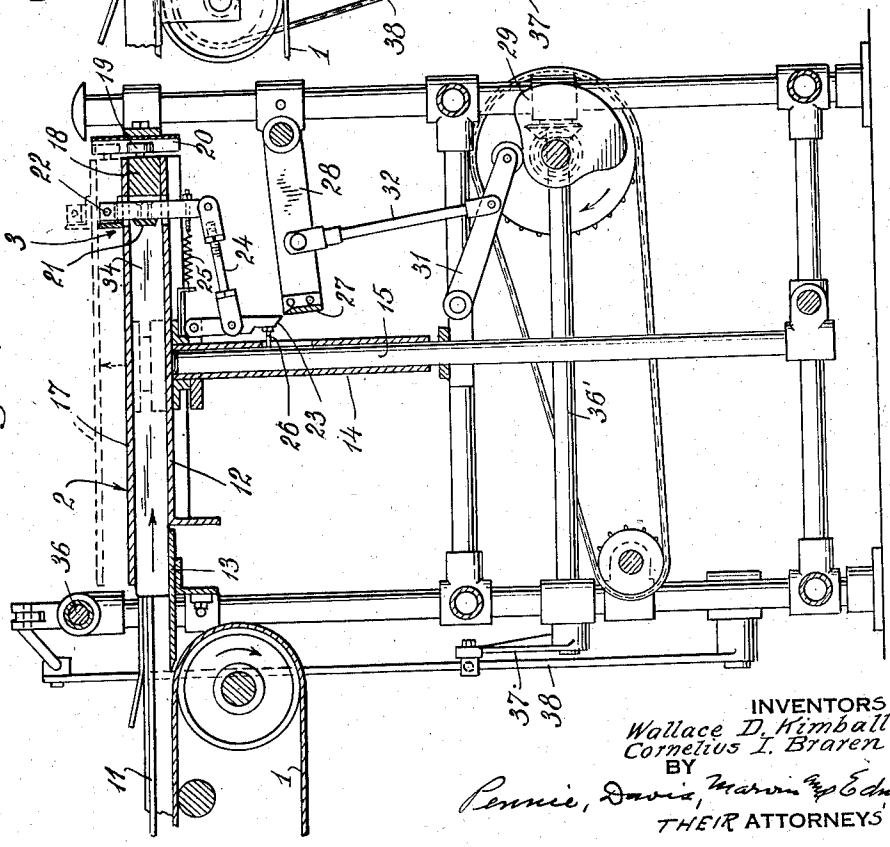

INVENTORS
Wallace D. Kimball and
Cornelius I. Braren
BY
Pennie, Davis, Marvin & Edmonds
THEIR ATTORNEYS

Dec. 27, 1938. W. D. KIMBALL ET AL 2,141,212

PACKAGE COLLECTOR

Filed Feb. 18, 1938 4 Sheets-Sheet 3

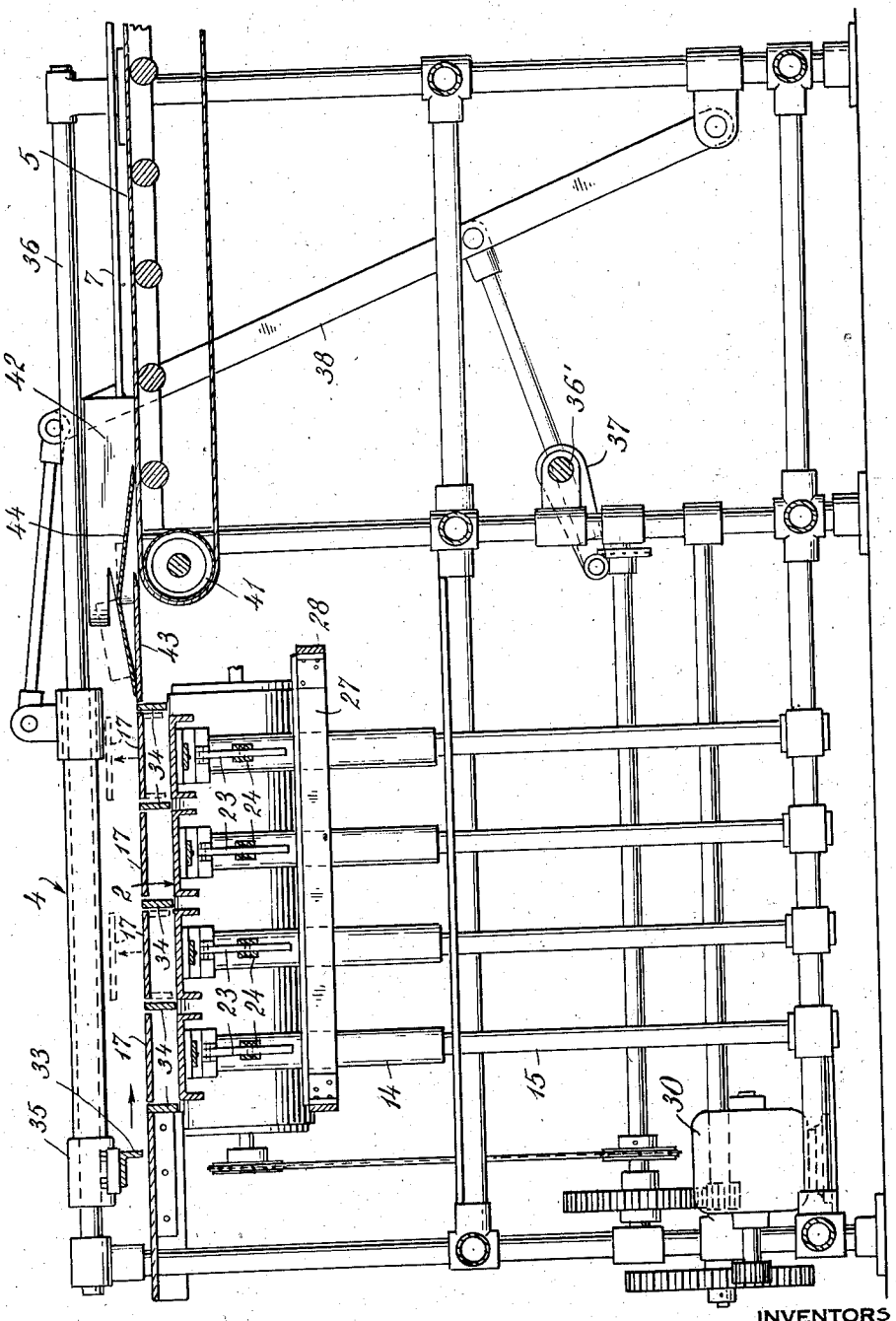

Fig. 5.

INVENTORS
Wallace D. Kimball and
Cornelius I. Braren
BY
Pennie, Davis, Marvin & Edmonds
THEIR ATTORNEYS

Dec. 27, 1938. W. D. KIMBALL ET AL 2,141,212

PACKAGE COLLECTOR

Filed Feb. 18, 1938 4 Sheets-Sheet 4

Fig. 8,

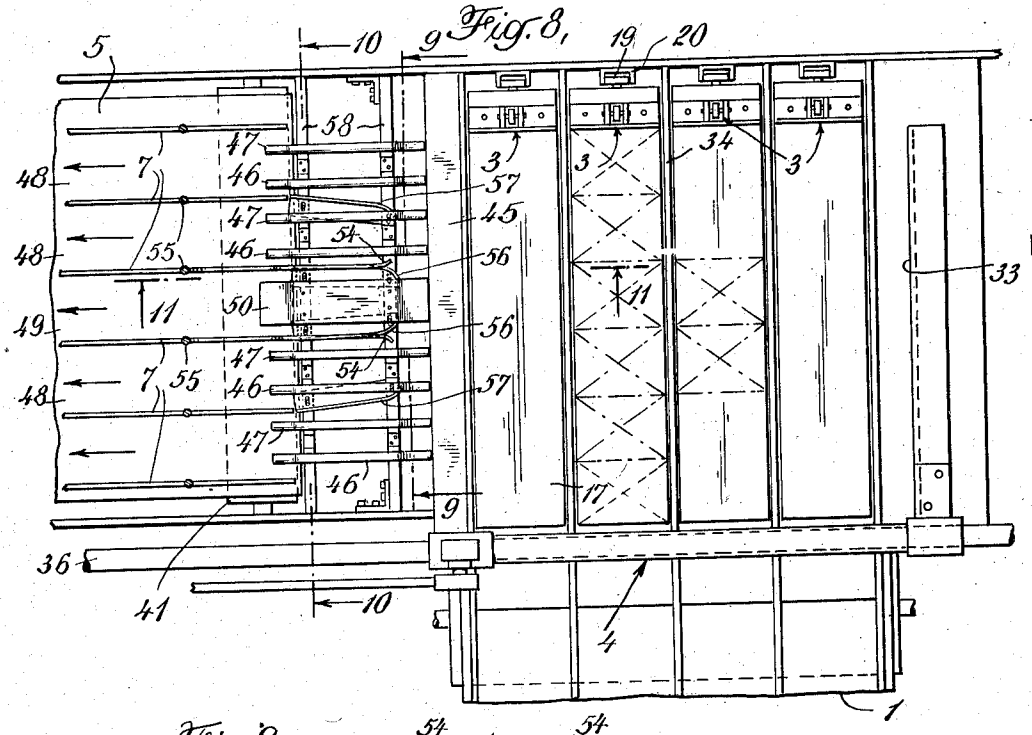

Fig. 9,

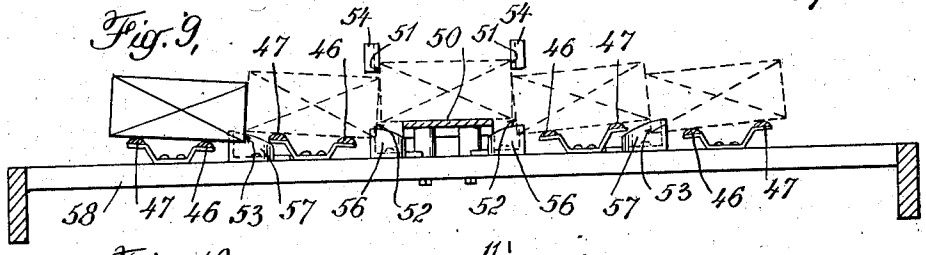

Fig. 10,

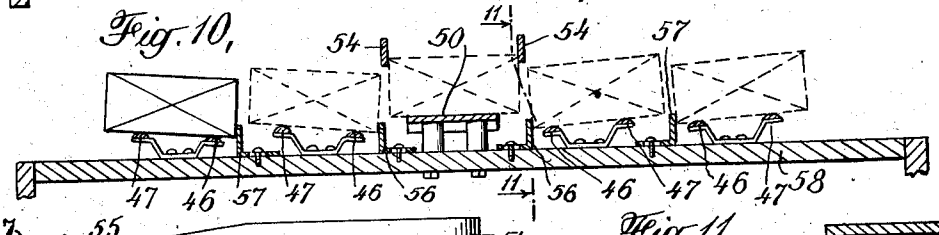

Fig. 11.

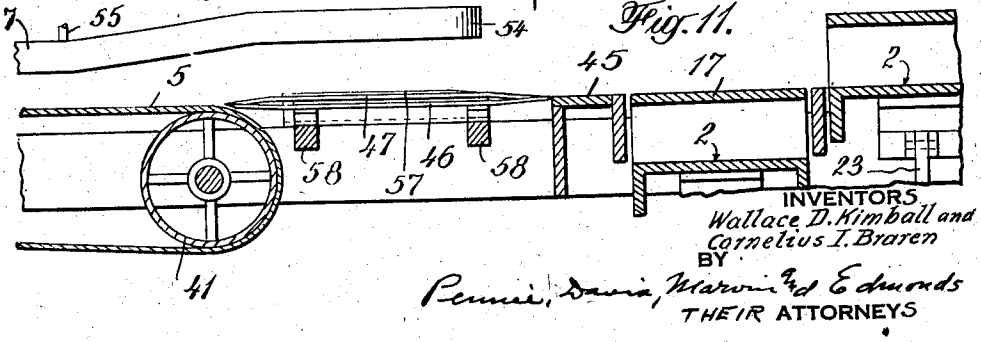

INVENTORS
Wallace D. Kimball and
Cornelius I. Braren
BY
Pennie, Davis, Marvin & Edmonds
THEIR ATTORNEYS

Patented Dec. 27, 1938

2,141,212

UNITED STATES PATENT OFFICE

2,141,212

PACKAGE COLLECTOR

Wallace D. Kimball, Jackson Heights, and Cornelius I. Braren, Jamaica, N. Y., assignors to Standard-Knapp Corporation, Long Island City, N. Y., a corporation of New York

Application February 18, 1938, Serial No. 191,196

17 Claims. (Cl. 198—30)

This invention relates to package collectors including automatic package-feeding and arranging apparatus such as used in manufacturing establishments for handling manufactured articles such as packages of cereal, cakes of soap and the like. More particularly the invention has to do with apparatus of this sort for receiving such articles in a plurality of lines in which the articles are not arranged in any particular order or spacing, and rearranging the articles in rows of uniform length and with the articles of each row uniformly spaced apart. Such rearrangement of articles is desirable or necessary in feeding the articles to certain kinds of automatic machinery such, for example, as automatic case packing machines for packing shipping cases with the articles. Such a machine is described and claimed in our copending application Serial No. 710,084, filed February 7, 1934, (now Patent 2,109,294, dated February 22, 1938) of which the present application is a continuation in part.

Manufactured articles such as packages of cereal, cakes of soap and the like are usually delivered from the wrapping or labelling machines, presses, or whatever machine performs the last operation on the finished article, by belt conveyors which convey the articles to the department where they are to be packed in shipping containers such as cartons made of corrugated board, fibre board or the like. Although the articles may be delivered to the conveyor belts in closed ranks gaps are often made in the ranks due to the temporary stoppage of the wrapping or other machines, the removal of defective articles by inspectors, and various other causes.

Where the goods are to be packed by hand in the packing cases these gaps in the ranks are of no significance, for in hand packing the articles are removed from the belts by hand. When, however, the articles are to be packed by automatic machinery it is desirable, if not essential, that the articles be delivered to the case packing machine with uniformity and regularity and at a speed which is adequate to supply the demands of the packing machine.

Accordingly, the invention aims to provide an automatic package-feeding and arranging mechanism for receiving the articles from a plurality of lines in which the articles are arranged in indeterminate spacing and rearranging the articles in rows of any desired length in which the articles are uniformly spaced.

A further object of the invention is to provide a simple and entirely automatic package-feeding and arranging mechanism for controlling the feed of articles to a case-packing machine whereby the packing machine is enabled to receive articles from a number of different chutes, conveyors or other "lines" leading from the labelling and wrapping machine which performed the last operation in the actual manufacture of the articles to be packaged and to deliver such articles in completely filled rows of any desired number, to the conveyors for assembling the articles in the packing machine.

Further objects of the invention will appear from the following description taken in conjunction with the accompanying drawings wherein we have illustrated a preferred form of our invention which has been found to possess the advantages above enumerated. In these drawings:

Fig. 1 is a plan view of our machine;

Fig. 2 is a view partly in side elevation and partly in section on plane 2—2 of Fig. 1;

Fig. 3 is an enlarged vertical sectional view on line 3—3 of Fig. 1 showing particularly the article-control feed mechanism for insuring a full charge of articles;

Fig. 4 is an end view drawn to the same scale as Fig. 3 and looking from the right end of the machine as viewed in Fig. 1, but with certain portions of the machine broken away or omitted for the sake of clearness;

Fig. 5 is a longitudinal sectional view at right angles to Fig. 3 on line 5—5 of Fig. 1 and drawn to the same enlarged scale as Fig. 3;

Figs. 6 and 7 are detailed sectional views showing the operation of the guides for separating the articles into rows;

Fig. 8 is a plan view of a portion of a machine similar to that shown in Fig. 1 but drawn to an enlarged scale and illustrating a modified arrangement for separating the articles into rows;

Figs. 9 and 10 are vertical sections taken respectively on planes 9—9 and 10—10 of Fig. 8 and drawn to a still further enlarged scale; and

Fig. 11 is a vertical section at right angles to Figs. 9 and 10 on line 11—11 of Fig. 8.

Before describing our improved machine in detail we will describe with reference to Figs. 1 and 2 the general construction of the machine and its mode of operation. In the machine selected for illustration, the articles to be packaged enter in four lines along a feed belt marked 1 in Fig. 1. The feed belt operates continuously but the articles are not positioned on the feed belt in immediate contact or in any uniform relation. This is due to the fact that in manufacturing establishments generally it is the practice to inspect the articles when delivered from the wrapping

and labeling machines and remove from the conveyors all articles which do not come up to standard. This examination has the effect of placing gaps in the line of articles being fed to the packaging machine, which gaps vary in extent and frequency. Also of course some one or other of the wrapping machines will be temporarily shut down for repairs or other reason, thus producing a long gap or a complete discontinuance of articles in one row or another of the four rows on the feed belt.

In advance of the feed belts and in position to receive the articles fed thereby are a series of article-supports, one for each belt, marked 2 in the drawings. These article supports are in line with the several lines of articles on the feed belt so that the continued movement of the feed belt will eventually deliver sufficient articles to each support to form a continuous row of articles in contact with each other. When sufficient articles have been accumulated on any one of the several supports for the row to be filled as indicated, the continued movement of the feed belt causes the articles to exert sufficient pressure on the control trip 3, for that particular support, which trip, by mechanism to be later described causes that particular article support to be shifted into position for the articles thereon to be removed. In the machine shown the article-supports 2 are raised by the mechanism controlled through the trip 3, into position to be engaged by a pusher mechanism 4 which shifts the row of articles transversely of the direction of feed of the belts 1 onto a feed belt 5 extending in a direction at right angles to the belt 1. By means of the belt 5 the articles are advanced as a complete row, extending transversely of belt 5, to the next operation, or to the case-packing machine of our hereinbefore copending application, when the present apparatus is used with such a machine.

Overlying the belt 5 as shown particularly in Fig. 1 are a series of separator guides indicated generally by numeral 6 which separate the articles of each compact row delivered from the support 2 slightly from each other, so that they may be carried by the belt 5 in separate pathways between guide rods 7 overlying the belt but still in a complete transverse row as indicated in Fig. 1. The belt 5 is operated continuously.

The mechanism for carrying out the operation as above described is shown in enlarged detail in Figs. 3, 4, 5, 6 and 7, to which reference will now be particularly made.

The feed belt 1 is continuously driven and the articles advanced thereby are maintained in alignment by overlying guides 11 providing in the present instance four lines of articles moving continuously into the machine, which lines, however, may contain gaps of greater or less extent. Each article path is defined by the overlying guides 11 and leads into a separate article-support 2 the construction of which is shown in detail in Figs. 2, 3, 4 and 5. Each support comprises a platform 12 whose upper surface lies in the same plane as the feed belt 1. The platform 12 is of a width approximating the space between the guides 11 and lies in direct line with the pathway defined by the guides so that the articles advanced by the belt will be fed directly onto the platform 12 over an intermediate fixed bridge 13.

The platform 12 is mounted on the top of a tubular column 14 which is mounted for vertical movement on a fixed vertical shaft 15, the column and shaft constituting the sole support of the platform 12. Overlying the platform 12 and spaced therefrom by a distance slightly greater than the thickness of the article to be packed, is a cover plate 17. This cover plate is supported at its end away from the belt 1 by means of a block 18 fixed between the platform and cover plate. Also fixed to the block 18 is a guide roller 19 working in a vertical channel guide 20 fixed to the machine frame, the roller serving to guide the article support in its up-and-down movement and maintain it in proper position to receive the articles from the feed belt.

A movable stop member 21 of trip 3 is mounted on the article-support adjacent the block 18 and in position to be engaged by the articles advanced by the belt 1 when sufficient articles have been delivered thereto to make a complete row. This stop member 21 is suspended from a suitable pivot 22 supported on the upper face of the cover plate 17. The member 21 extends through slots in the plate 17 and platform 12 and is spaced sufficiently from the block 18 to permit a slight rocking movement on its pivot under the pressure of the articles delivered to the platform by the belt 1.

Suspended from the under side of the platform 12 adjacent the sleeve 14 is a trip lever 23, which lever is connected to the member 21 by an adjustable link 24. A spring 25 is provided for holding the member 21 away from the block 18 to an extent permitted by a stop pin 26 carried by the fixed column 15 and cooperating with a stop projection on the trip arm 23. Cooperating with the trip arm 23 is an actuating bar 27, which bar extends across the machine underneath the four separate article-supports 2 whereby the single operating bar 27 will engage and operate any or all of the trip arms 23 projected into its path of movement by the pressure of the articles against the members 21. The actuating bar 27 is supported for vertical oscillation upon rock arms 28 mounted on fixed pivots carried by the frame members of the machine and is periodically elevated by means of a cam 29 continuously rotated from the driving motor 30 of the machine, the cam operating through a cam arm 31 and link 32 connected to one of the rock arms 28 supporting the actuating bar.

The position of the trip arm 23 is so adjusted by means of the link 24 and the adjustable stop carried by the trip arm as to just be clear of the operating bar 27 when elevated by the cam when the arm 23 is held in its position of rest against the stop 26. Until the member 21 is shifted by the pressure of the articles advanced by the feed belt the article-support 2 will remain stationary and the actuating arm 27 will oscillate idly up and down. When the trip member 21 is shifted as described, the arm 23 will be brought into position over the actuating bar 27 and on the upward movement of the actuating bar the support 2 will be elevated a sufficient distance to bring the articles supported on the platform 12 above the plane of the articles on the feed belt 1 as shown in dotted lines in Figs. 3 and 5 and into position to be engaged by the reciprocating arm 33 of pusher mechanism 4 (see Fig. 5) which reciprocates across the four article-supports 2 and thereby serves to deliver the row of articles which has been elevated, from its support onto the feed belt 5. It may be that two or more supports will be elevated at the same movement of the actuating bar 27. In such case the reciprocating arm

33 will shift all the rows so elevated onto the feed belt.

The several article-supports are separated from each other by means of fixed guide bars 34 which constitute in effect extensions of the guides 11. These guides 34 are fixed to the bridge 13 and extend between the several cover plates 17 as shown more particularly in Fig. 5, the top edges of the guide bars being flush with the upper surface of the cover plates to thereby form a continuous surface over which the articles are shifted by the arm 33. When the supports 2 are elevated by the actuating bar 27 as described, the platforms 12 on which the articles rest are brought into line with the cover plates 17 of the supports which are not elevated, whereby there will always be a substantially continuous surface over which the articles are advanced by the reciprocating arm 33.

The arm 33 consists of an angle member supported at one end upon a sleeve 35 mounted for reciprocation on a fixed guide rod 36 which in turn is fixedly attached to the frame members in a position overlying the bridge 13. The arm 33 is operated in timed sequence with the actuating bar 27 by means of a crank shaft 36' driven from the shaft of the cam 29 through suitable bevel gears, as shown, whereby the slide makes one complete reciprocation for each revolution of the cam shaft. The cam 29 is so shaped and so timed with respect to the crank 37 which operates the arm 33 that the supports 2 will be elevated during the time that the arm 33 is in its position at the end of its stroke away from the delivery belt 5, and will be held in elevated position throughout the movement of the arm across the four supports and just clear of the cover plate 17 nearest the belt 5. The supports are then lowered while the arm is completing its movement of delivering the articles to the belt 5. In other words the arm 33 has a movement sufficiently in excess of the combined width of the four supports for the supports to be raised and lowered while the arm is completing or reversing its movement. The arm will return to its initial position shown in Fig. 6 while the cam roller is on the low part of the cam.

Thus the reciprocating arm 33 will deliver to the belt 6 on each reciprocation whatever rows of articles have been elevated by the actuating bar 27 and in the event none of the bars have been elevated, no articles will be delivered to the belt 5. The belt 5, whenever it receives articles at all, thus receives articles in one or more complete rows and these rows are carried forward by the belt 5 in substantially transverse alignment but separated from each other by the overlying guide bars 7, as shown more particularly in Fig. 1.

In order to space the articles from each other as they are advanced onto the belt 5 so that the guide bars 7 may pass between them, we provide the separator guides 6 mounted over the pulley 41 which supports the end of the belt 5 adjacent the supports 2. These separator guides comprise a series of guide plates 42 (Figs. 6 and 7) attached to the ends of the guide rods 7 (Fig. 1) and projecting toward the supports 2 and overlying the stationary bridge 43 lying between the adjacent support and the belt 5 forming a continuous surface for the articles thereover. The guides 42 are bifurcated at their free ends at a point corresponding with the thickness of the article and the tongues formed by this bifurcation are bent in opposite directions.

The guides are arranged so that between one pair of guide rods the two lower tongues will be flared outwardly (Fig. 1) to guide the article advanced by the reciprocating arm 33 into the space between the guide rods while the next two guide plates 42 will have their upper tongues bent outwardly to engage and guide the article into the space between the guide rods. As stated above, the upper tongues of the guide plates 42 are at an elevation from the belt greater than the thickness of the article and consequently the articles to be acted on by the upper tongues must be elevated above the plane of the belt as they are advanced by the arm 33. To this end between each alternate pair of guide rods, namely, those which have the upper tongues of the guide plates 42 flared outwardly, there is placed a bridge piece 44. These bridge-pieces extend beyond the ends of the guide plates 42 and the inclination of the bridge is such that every other article in the row advanced by the arm 33 will be elevated sufficiently to clear the lower tongues of the guide plates and be engaged by the upper tongues and thus directed into the space between the adjacent guide rods. The intermediate articles, that is, those lying between the articles which ride up on the bridge pieces 44, will move along the surface of the bridge 43 and thus pass under the upper tongues of the guide plates and be engaged by the outwardly flaring lower tongues and thus guided into the channel between the guide rods.

In order that the articles may be further separated laterally from each other as they are advanced by belt 5 the guide rods 7 diverge slightly toward the delivery end of the machine, as shown in Fig. 1.

It is believed the operation of the machine will be sufficiently understood from the foregoing description. It will be observed that no matter to what extent there may be gaps in the incoming lines of articles, even to the extent of one or more lines being completely stopped, the machine will automatically operate to advance complete transverse rows of articles on the delivery belt 5.

It will be further observed that throughout the operation of the machine there is no relative movement of the articles with respect to each other while in contact except the slight vertical movement effected by the inclined bridges 43, which movement is just sufficient to allow the guide rods 42 to enter between the articles and separate them into separate rows.

Referring now to Figs. 8 to 11 of the accompanying drawings, there is here illustrated a modified form of mechanism for effecting the separation of the articles as they are swept in complete rows from the article supports 2 onto the belt 5 by means of the reciprocating arm 33 of the pusher mechanism 4. In this modification the articles of the advancing complete row, or certain of these articles, are tilted transversely with respect to the direction of their travel in order to expose their side edges to the action of a laterally shifting guide, instead of tilting the articles longitudinally for this purpose, as in the separating mechanism previously described and shown particularly in Figs. 6 and 7.

For this purpose the articles, as they leave the left-hand support 2 of its cover plate 17, as shown in Figs. 8 and 11 (depending upon whether this article support is in its lower or upper position) slide first over a narrow bridge plate 45. The two articles on each side of the center then move onto pairs of parallel rails 46 and 47 by means

of which they are transferred onto the surface of belt 5 and into the respective lanes 48 between guide rods 7. There is a pair of these rails for each article in the complete row and hence for each lane or pathway 48 except the center lane 49. The center article is carried into lane 49 by means of a horizontal plate 50. As shown in Figs. 9, 10 and 11 the outside rail 47 of each pair is raised at its central portion, while the inside rail 46 of each pair is depressed.

This causes the articles while supported on the central portions of these rails to be tilted with respect to one another as shown in Figs. 9 and 10. Thus the two articles adjacent each side of the center article have their inside edges dropped below the center article, and the two outermost articles of each row are similarly tilted with respect to their neighbors. This exposes the upper side edges 51 of the center article and the lower side edges 52 of the two articles adjacent the center article. It also exposes similar edges 53 of the two outermost articles.

In order to guide the center article between the rails 7 which form the center lane 49, a pair of guides 54 are arranged in alinement with these two guide bars 7 at a proper elevation to engage the exposed upper side edges 51 of the center article or package. The right-hand ends of these guides 54 are flared outwardly, as shown in Fig. 8. These guides 54 are shown as upwardly offset extensions of guide rails 7, all of these rails being suspended by vertical rods 55 from a cross member (not shown).

The exposed lower side edges 52 and 53 of the remaining articles or packages of the row, two of which are on the left of the center package and two of which are on the right, are engaged by shifting guides 56 and 57, respectively. These guides are angular shaped members in cross section having vertical guide faces and horizontal web portions by means of which they are mounted upon cross members 58 which also serve to support the rails 46 and 47 which are mounted upon brackets, as illustrated in Figs. 9 and 10.

Shifting guides 56 and 57 are arranged with their rear ends in alinement with the ends of certain of guide rails 7 while their forward ends are preferably flared, as shown in Fig. 8, and are placed sufficiently out of alinement with these guide rails to engage the side edges 52 of the articles or packages when the forward ends of the articles first advance onto tilting rails 46 and 47 and while the articles are still in contact with one another. This angular position of shifting guides 56 and 57 causes the two articles on each side of the center article to shift laterally and outwardly as they are pushed forward along the sloping rails 46 and 47 toward belt 5 by the reciprocating arm 33.

In this manner these articles are separated from the center article and from one another and directed into the lanes 48 between the respective pairs of guide rails 7. It will be noted that shifting guides 57 are placed at a somewhat greater angle than shifting guides 56 for the reason that the articles which are to enter the outermost lanes 48 must be shifted a greater distance laterally than the articles which enter the two lanes 48 which are adjacent center lane 49. In order to facilitate the proper positioning of these shifting guides they are preferably adjustably mounted upon the cross members 58, as indicated in Figs. 8 and 10.

It will be observed that the lateral tilting of the articles by the rails 46 and 47 enables the forward end of guides 56 to extend beneath the opposite sides of the center package, and the forward ends of guides 57 to extend beneath the outer sides of the packages which are to enter the lanes adjacent these shifting guides.

In the attached drawings and foregoing description we have disclosed embodiments of our invention which have been found in actual practice to be satisfactory and efficient. It will be understood, however, that the invention is not limited to the constructions specifically disclosed except insofar as defined in the appended claims.

We claim:

1. In a machine of the class described, a supply conveyor for carrying articles in a plurality of lines in indeterminate spacing in each line, a receiving conveyor at right angles thereto and having its receiving end at a higher elevation than the adjacent end of the supply conveyor, a plurality of elevating devices arranged in alinement respectively with the lines of articles advanced by the supply conveyor, each of said devices being adapted to receive a single row of articles, said devices each having two superposed platforms, one normally at the level of said supply conveyor and the other normally at the level of said receiving conveyor, means under the control of the articles advanced onto each lower platform of said elevating devices for raising said lower platform to the elevation of said receiving conveyor, an arm adapted to move crosswise of said elevating devices to sweep the articles thereon onto said receiving conveyor, and means for actuating said arm in timed relation to the raising of said elevating devices.

2. In a machine of the class described, a supply conveyor for carrying articles in a plurality of lines in indeterminate spacing in each of said lines, a table for receiving the articles from said conveyor and supporting them in end-to-end contact with one another, a second conveyor at right angles to said supply conveyor for receiving the articles from said table, guiding devices arranged over said second conveyor to guide the articles in a plurality of lines thereon, means for sweeping the articles from said table onto said second conveyor, and means for separating said closely spaced articles so as to deliver them into the spaces between said guiding devices comprising guide plates one in alinement with the end of each of said guiding devices, each of said plates having upper and lower tongues at its front end, the lower tongues of alternate pairs of guide plates being flared outwardly and the upper tongues of the intermediate pairs of guide plates being flared outwardly, and means for elevating the articles approaching the lines between said intermediate guide plates so as to raise the articles sufficiently to clear the lower tongues of the guide plates and be engaged by the upper tongues thereof and thus directed into the spaces between said guide plates.

3. In a machine of the class described, a conveyor for moving articles in a plurality of lines, the articles in each line being in indeterminate spacing, means for receiving the articles therefrom and arranging the articles in complete rows, comprising a plurality of elevating devices arranged in alinement respectively with the lines of articles advanced by said conveyor and adapted to receive each a single row of articles, said devices each having two superposed platforms, the lower platforms being normally at the level of said conveyor, and the upper platforms being normally at a uniform level and providing a

smooth table over which the articles will readily slide, means under the control of the articles advanced onto each of said lower platforms for raising said elevating device to bring the lower platform thereof to the elevation of the upper platforms of the unraised elevating devices, means operating in timed relation with the raising of said elevating device for sweeping the articles thereon over the platforms of the elevating devices, and means for receiving said articles.

4. In a machine of the class described, a conveyor for moving articles in a plurality of lines in indeterminate spacing in each line, means for receiving the articles therefrom and arranging them in complete rows of predetermined length, comprising a plurality of elevating devices arranged in alinement respectively with the lines of articles advanced by said conveyor and adapted to receive each a single row of articles, said devices having each two superposed platforms, the lower platform of each device being normally at the level of said conveyor and the upper platforms of said devices being at a common level and providing a smooth surface over which articles will readily slide, means for receiving the rows of articles from said elevating devices, means for sweeping said rows of articles from said elevating devices onto said receiving means, elevating mechanism operated in timed relation to said sweeping means, and means on each of said elevating devices actuated by the articles thereon for connecting said elevating device with said elevating mechanism so as to cause the lower platform thereof to be elevated to the level of the upper platforms of unraised elevating devices whereby the row of articles on said elevating device is supported on said upper platforms while sliding thereover under the action of said sweeping means.

5. In an apparatus of the class described having a conveyor for receiving articles arranged in rows and provided with guiding devices for causing said articles to be advanced by said conveyor in parallel paths, means for delivering successive rows of articles thereto, the articles in each row being substantially in contact with one another, and means for separating said articles so as to deliver them into the spaces between said guiding devices comprising guide plates, one in alinement with the end of each of said guiding devices, each of said plates having upper and lower tongues at its front end, the lower tongues of alternate pairs of guide plates being flared outwardly and the upper tongues of the intermediate pairs of guide plates being flared outwardly, and means for elevating the articles approaching the spaces between said intermediate guide plates so as to raise the articles sufficiently to clear the lower tongues of the guide plates and be engaged by the upper tongues thereof and thus directed into the spaces between said guide plates.

6. In an apparatus of the class described having a conveyor for receiving articles arranged in rows extending transversely of the conveyor and provided with guiding devices for causing the articles to be advanced by the conveyor in separated lines, means for delivering successive rows of articles to the conveyor the articles in each row being in contact with one another, and means for separating said articles so as to deliver them into the spaces between the guiding devices comprising guiding projections in alinement with the ends of said guiding devices, certain of these projections being adapted to engage the articles at one level and others being adapted to engage the articles at a higher level, and means for elevating the articles approaching the latter guiding projections.

7. In an apparatus of the class described having a conveyor for receiving articles arranged in rows extending transversely of the conveyor and provided with guiding devices for causing the articles to be advanced by the conveyor in separated lines, means for delivering successive rows of articles to the conveyor the articles in each row being in contact with one another, and means for separating said articles so as to deliver them into the spaces between the guiding devices, comprising means for tilting the articles in certain lines with respect to the articles of other lines as they move toward the guiding devices so as to expose the forward side edges of the articles, and guiding means for engaging the exposed edges of these articles to cause them to advance into the spaces between the guiding devices.

8. In an apparatus of the class described having a conveyor for receiving articles arranged in rows extending transversely of the conveyor and provided with guiding devices for causing the articles to be advanced by the conveyor in separated lines, means for delivering successive rows of articles to the conveyor the articles in each row being in contact with one another, and means for separating said articles so as to deliver them into the spaces between the guiding devices comprising means for tilting the articles of alternate lines with respect to the articles of the intermediate lines as they move toward the guiding devices so as to expose the forward side edges of the articles, and guiding means for engaging the exposed edges to cause the articles to advance into the spaces between the guiding devices.

9. In an apparatus of the class described having a conveyor for receiving articles arranged in rows extending transversely of the conveyor and provided with guiding devices for causing the articles to be advanced by the conveyor in separated lines, means for delivering successive rows of articles to the conveyor the articles in each row being in contact with one another, and means for separating said articles so as to deliver them into the spaces between the guiding devices comprising means for selectively tilting the articles of certain lines with respect to the conveyor as the articles move toward the guiding devices so as to separate the forward side edges of adjacent articles in a row, and guiding means for engaging the said edges of the articles to cause them to advance into the spaces between the guiding devices.

10. In an apparatus of the class described having a conveyor for receiving articles arranged in rows extending transversely of the conveyor and provided with guiding devices for causing the articles to be advanced by the conveyor in separated lines, means for delivering successive rows of articles to the conveyor the articles in each row being in contact with one another, and means for separating said articles so as to deliver them into the spaces between the guiding devices comprising means for tilting the articles of certain lines as they move toward the guiding devices so as to raise the forward ends of the articles in these lines above the articles in other lines, thereby separating the forward side edges of the articles in each transverse row, and guid-

ing means for engaging the said edges to cause the articles to advance into the spaces between the guiding devices.

11. In an apparatus of the class described having a conveyor for receiving articles arranged in rows extending transversely of the conveyor and provided with guiding devices for causing the articles to be advanced by the conveyor in separated lines, means for delivering successive rows of articles to the conveyor the articles in each row being in contact with one another, and means for separating said article so as to deliver them into the spaces between the guiding devices comprising means for tilting the articles of alternate lines as they move toward the guiding devices so as to raise the forward ends of the articles in these lines above the articles in the intermediate lines thereby exposing the forward side edges of the articles of a row, and guiding means for engaging the said edges to cause the articles to advance into the spaces between the guiding devices.

12. In an apparatus of the class described having a conveyor for receiving articles arranged in rows extending transversely of the conveyor and provided with guiding devices for causing the articles to be advanced by the conveyor in separated lines, means for delivering successive rows of articles to the conveyor the articles in each row being in contact with one another, and means for separating said articles so as to deliver them into the spaces between the guiding devices, comprising means for tilting adjacent articles of each transverse row transversely with respect to one another as they move toward the guiding devices thereby exposing the side edges of such articles, and guiding means for engaging the exposed side edges of certain of the articles of each transverse row to shift them laterally as they advance into the spaces between the guiding devices.

13. In an apparatus of the class described having a conveyor for receiving articles arranged in rows extending transversely of the conveyor and provided with guiding devices for causing the articles to be advanced by the conveyor in separated lines, means for delivering successive rows of articles to the conveyor the articles in each row being in contact with one another, and means for separating said articles so as to deliver them into the spaces between the guiding devices, comprising means for tilting adjacent articles of each transverse row transversely with respect to one another as they move toward the guiding devices thereby exposing the lower portion of the side of one of each two adjacent articles of each transverse row, and guiding means for engaging the said exposed lower portions and shifting such articles laterally as they advance into the spaces between the guiding devices.

14. In an apparatus of the class described having a conveyor for receiving articles arranged in rows extending transversely of the conveyor and provided with guiding devices for causing the articles to be advanced by the conveyor in separated lines, means for delivering successive rows of articles to the conveyor the articles in each row being in contact with one another, and means for separating said articles so as to deliver them into the spaces between the guiding devices, comprising means for maintaining the center article of each row in level position, and means for tilting transversely with respect to one another the articles on each side of said center article thereby exposing the upper side edges of the center article and the lower side edges of the remaining articles of each row, means for engaging the exposed upper side edges of the center article for guiding the same into the space between the guiding devices therefor, and means for engaging the exposed lower side edges of the remaining articles to shift them laterally as they advance into their spaces between the guiding devices.

15. In a machine of the class described, a supply conveyor for carrying articles in a plurality of lines in indeterminate spacing in each of said lines, a table for receiving the articles from said conveyor and supporting them in end-to-end contact with one another, a second conveyor at right angles to said supply conveyor for receiving the articles from said table, guiding devices arranged over said second conveyor to guide the articles in a plurality of lines thereon, means for sweeping the articles from said table onto said second conveyor, and means for separating said closely spaced articles so as to deliver them into the spaces between said guiding devices comprising means for tilting the articles of certain lines with respect to the articles of other lines as they move toward the guiding devices so as to expose the forward side edges of the articles, and guiding means for engaging the exposed edges of these articles to shift them laterally as they advance into the spaces between the guiding devices.

16. In a machine of the class described, a conveyor for moving articles in a plurality of lines, the articles in each line being in indeterminate spacing, means for receiving the articles therefrom and arranging the articles in complete rows, comprising a plurality of elevating devices arranged in alinement respectively with the lines of articles advanced by said conveyor and adapted to receive each a single row of articles, said devices each having two superposed platforms, the lower platforms being normally at the level of said conveyor, and the upper platforms being normally at a uniform level and providing a smooth table over which the articles will readily slide, means under the control of the articles advanced onto each of said lower platforms for raising said elevating device to bring the lower platform thereof to the elevation of the upper platforms of the unraised elevating devices, means operating in timed relation with the raising of said elevating device for sweeping the articles thereon over the platforms of the elevating devices, a conveyor for receiving said articles and provided with guiding devices for causing the articles to be advanced by the conveyor in separated lines, and means for separating the articles of each complete row as it is swept toward said conveyor by said sweeping means comprising means for tilting certain of the articles of each complete row with respect to adjacent articles so as to expose the forward side edges of the articles, and guiding means for engaging the exposed edges of the articles to cause them to advance into the spaces between the guiding devices.

17. In a machine of the class described, a conveyor for moving articles in a plurality of lines, the articles in each line being in indeterminate spacing, means for receiving the articles therefrom and arranging the articles in complete rows, comprising a plurality of elevating devices arranged in alinement respectively with the lines of articles advanced by said conveyor and adapted to receive each a single row of articles, said devices each having two superposed platforms, the lower platforms being normally at the level of said conveyor, and the upper platforms being normally at

a uniform level and providing a smooth table over which the articles will readily slide, means under the control of the articles advanced onto each of said lower platforms for raising said elevating device to bring the lower platform thereof to the elevation of the upper platforms of the unraised elevating devices, means operating in timed relation with the raising of said elevating device for sweeping the articles thereon over the platforms of the elevating devices, a conveyor for receiving said articles and provided with guiding devices for causing the articles to be advanced by the conveyor in separated lines, and means for separating the articles of each complete row as it is swept toward said conveyor by said sweeping means comprising means for tilting adjacent articles of each complete row with respect to one another as they are swept toward the conveyor by said sweeping means thereby exposing the side edges of the articles, and guiding means for engaging the exposed edges of certain of the articles of each transverse row to shift them laterally as they advance into the spaces between the guiding devices.

WALLACE D. KIMBALL.
CORNELIUS I. BRAREN.