(19) Europäisches Patentamt
European Patent Office
Office européen des brevets

(11) Publication number: **0 404 108 A1**

(12) # EUROPEAN PATENT APPLICATION

(21) Application number: **90111666.5**

(51) Int. Cl.[5]: **G08B 3/10**

(22) Date of filing: **20.06.90**

(30) Priority: **21.06.89 JP 158888/89**

(43) Date of publication of application:
**27.12.90 Bulletin 90/52**

(84) Designated Contracting States:
**DE GB NL**

(71) Applicant: **NEC CORPORATION**
**7-1, Shiba 5-chome Minato-ku**
**Tokyo 108-01(JP)**

(72) Inventor: **Muramatsu, Akira, c/o NEC Corporation**
**7-1, Shiba 5-chome**
**Minato-ku, Tokyo(JP)**
Inventor: **Ishiguro, Tetsumi, c/o NEC Corporation**
**7-1, Shiba 5-chome**
**Minato-ku, Tokyo(JP)**

(74) Representative: **Vossius & Partner**
**Siebertstrasse 4 P.O. Box 86 07 67**
**D-8000 München 86(DE)**

(54) **Control apparatus for a call reminder in a paging system.**

(57) A signal received in a paging receiver includes a reminding control signal, by which a call reminder is controlled to remind a user to respond to the received signal in a periodical reminding mode. The degree of an importance relating to message is conveyed from a caller to a callee by using a periodical reminding call instead of an ordinary call.

EP 0 404 108 A1

# CONTROL APPARATUS FOR A CALL REMINDER IN A PAGING SYSTEM

This invention relates to a control apparatus for a call reminder in a paging system, and more particularly to, a paging control apparatus for reminding a user carrying a receiver in a case where a call signal for reminding the user is included in a radio signal transmitted from a paging station, etc.

In these years, a paging receiver having various functions has been proposed and put into a practical use in a tendency of adding multi-functions to the paging system.

A conventional paging receiver comprises a call reminder for periodically reminding a user carrying the receiver by using a short alerting call which continues until the user manually discontinues it, so that a call is definitely recognized by the user, for instance, as described in the U.S. Patent No. 4,701,759.

However, the conventional paging receiver has disadvantages in that a period between an initial call and a reminder call is fixed in advance, and an actuating time duration of a call reminder is also fixed in advance. Accordingly, the same call reminding operation is carried out between an emergent call and an ordinary call. As a result, a call reminding is carried out even in an ordinary call having no necessity of the call reminding.

Accordingly, it is an object of the invention to provide a control apparatus for a call reminder in a paging system in which the form of a reminding call is changed according to the degree of an importance.

It is another object of the invention to provide a control apparatus for a call reminder in a paging system, by which the degree of an importance is transmitted from a caller to a callee.

It is a further object of the invention to provide a control apparatus for a call reminder in a paging system in which a reminding call is generated only when a caller requires it.

According to this invention, a control apparatus for a call reminder in a paging system, comprises:
means for detecting a reminding control signal in a signal received in a paging receiver;
means for determining a conduct of a periodical reminding call as a result of detecting the reminding control signal;
means for reminding a user carrying the paging receiver to respond to the received signal; and
means for driving the reminding means to remind the user in a driving manner selected from a periodical reminding mode and an ordinary calling mode as a result of determining the conduct.

This invention will be explained in more detail in conjunction with appended drawings, wherein:

Fig. 1 is a block diagram showing a paging receiver including a control apparatus for a call reminder in a paging system in a preferred embodiment according to the invention,

Fig. 2 is an explanatory diagram showing a received signal in the paging receiver,

Figs. 3 and 4 are timing charts showing reminding time signals, and

Fig. 5 is a flow chart showing a control flow in the control apparatus.

A control apparatus for a call reminder in a paging system in a preferred embodiment according to the invention will be explained.

Fig. 1 shows a paging receiver comprising the control apparatus of the preferred embodiment which includes a radio circuit 19 for amplifying and demodulating a radio signal received by an antenna 18, a waveform shaping circuit 20 for shaping a waveform of a demodulated signal supplied from the radio circuit 19, a decoder 21 for carrying out a below described operation, a quartz oscillator 22 for supplying clock signals to the decoder 21, etc. a PROM 23 for storing its own call signal (call number), an alert signal generating time $T_1$ (defined as "first time") and a selecting signal SL of call reminders including a speaker 26, a LED 27, a vibrator 28, etc. The speaker 26, LED 27, vibrator 28 is driven by an alert apparatus driver 90. A RAM 24 having a memory region 24a for storing a reminding control signal XX (to be described later), an amplifying and driving circuit 25 for the call reminders, a reset button 29 connected to the decoder 21, a CPU 30 for controlling the display of message, a liquid crystal display (LCD) 31 for displaying the message, and a switch 32 for turning a power supply 33 on and off. In the decoder 21, a signal supplied from the waveform shaping circuit 20 is processed to carry out the comparison of a call signal, the detection and analysis of the reminding control signal XX, a periodical reminding control operation according to the detection and analysis thereof, a transfer control operation of the message to the CPU 30, etc.

Fig. 2 shows a format of a digital coded signal including the reminding control signal XX. The signal includes a preamble signal 34 for changing an intermittent operation to a continuous operation in the radio circuit 19, a synchronous signal 35 for the synchronism of the receiver with a received signal, a selecting call signal 36 which is compared with the call number stored in the PROM 23 in a state of the synchronism with the received signal, message 37 which is received subsequent to the selecting call signal 36 in a state of a coincidence between the selecting call signal and the call number, and the reminding control signal XX of a two digit signal 38. The signal 38 is inputted by a user in accordance with the degrees of the

importance and emergency. The signal 38 may not be inputted when user does not require.

Fig. 3 shows four kinds of reminding time signals 45 to 48, one of which is selected by a content of the reminding control signal XX 38. Each of the reminding time signals 45 to 48 includes a common first time $T_1$ which is the alert signal generating time and a corresponding one of non-common second times $T_2$ which is a period between an initial call and a reminder call ($T_{2A}$, $T_{2B}$, $T_{2C}$, and $T_{2D}$), each of which is one period of the corresponding reminding time signal as listed below. In Fig. 3, "high" durations indicated by 45a, 46a, 47a and 48a provide a generating period of an initial call, and remaining "high" durations provide a generating period of a reminder call. The two bit signal "00", "01", "10" or "11" is designated in accordance with the degree of an importance or emergency. In a call having no necessity of a reminding call, this designation is not carried out.

| REMINDING CONTROL SIGNAL | | REMINDING TIME SIGNAL |
|---|---|---|
| X | X | |
| 0 | 0 | 45 |
| 0 | 1 | 46 |
| 1 | 0 | 47 |
| 1 | 1 | 48 |

Fig. 4 shows another set of reminding time signals 55 to 58, each of which includes a corresponding one of non-common first times $T_1$ ($T_{1A}$, $T_{1B}$, $T_{1C}$, and $T_{1D}$) and a common second time $T_2$ equal to one period thereof. The relations between the reminding time signals 55 to 58 and the reminding control signal XX 38 are listed below. In Fig. 4, "high" durations indicated by 55a, 56a, 57a and 58a provide a generating period of an initial call, and remaining "high" durations provide a generating period of a reminder call. A content of the signal 38 is designated in accordance with the degree of an importance or emergency.

| REMINDING CONTROL SIGNAL | | REMINDING TIME SIGNAL |
|---|---|---|
| X | X | |
| 0 | 0 | 55 |
| 0 | 1 | 56 |
| 1 | 0 | 57 |
| 1 | 1 | 58 |

Operation of the control apparatus in the preferred embodiment will be explained in Fig. 5.

When the signal as shown in Fig. 2 is transmitted from a paging station to a paging receiver, the signal is received by the antenna 18 of the paging receiver which is turned on by the switch 32, and amplified and demodulated in the radio circuit 19. The signal thus amplified and demodulated is shaped in its waveform in the waveform shaping circuit 20, and the waveform shaped signal is supplied to the decoder 21. Before receiving the signal, the radio circuit 19 is controlled to operate in an intermittent mode by the CPU 30. Then, the radio circuit 19 is controlled to operate in a continuous mode by receiving the preamble signal 34. When the paging receiver is synchronized with the received signal in accordance with the synchronous signal 35, the decoder 21 detects whether the signal supplied from the waveform shaping circuit 20 have a call signal identical to the call signal CD stored in the PROM 23 by referring to the selecting call signal 36 (step S1). When the identical call signal is detected, it is then detected whether the reminding control signal XX 38 is included therein (step S2).

In a case where no reminding control signal is detected, an ordinary calling alert operation is carried out (step S18). In this ordinary calling alert operation, the calling alert amplifying and driving circuit 25 is controlled to drive at least one call apparatus selected from the speaker 26, the LED 27, and the vibrator 28

in accordance with the selecting signal SL, by which a user carrying the paging receiver is alerted only one time. In this state, if the message 37 includes data to be displayed on the LCD 31, the data are transferred to the CPU 30 and displayed on the LCD 31.

In a case where the reminding control signal XX 38 is detected in the received signal (step S2), on the other hand, the reminding control signals XX 38 is written into the memory region 24a of the RAM 24, and a periodical reminding operation is carried out as explained below.

When the reminding control signals XX 38 is "00", a reminding time signal is set to have a "high" duration of the first time $T_1$ and a period of the second time $T_{2A}$ as the reminding time signal 45 shown in Fig. 3 (steps S3 and S4). On the other hand, when the reminding control signal XX 38 is "01", "10", "11", respectively, the reminding time signals are set to have periods of the second times $T_{2B}$, $T_{2C}$ and $T_{2D}$, respectively, relative to the fixed "high" duration of $T_1$ as the reminding time signals 46 to 48 shown in Fig. 3 (steps S5 to S9). The relations between the reminding time signals 45 to 48 and the reminding control signal XX 38 are as follows.

| REMINDING CONTROL SIGNAL 38 | | REMINDING TIME SIGNALS 45 TO 48 | |
|---|---|---|---|
| X | X | HIGH DURATION | PERIOD |
| 0 | 0 | $T_1$ | $T_{2A}$ |
| 0 | 1 | $T_1$ | $T_{2B}$ |
| 1 | 0 | $T_1$ | $T_{2C}$ |
| 1 | 1 | $T_1$ | $T_{2D}$ |

The reminding call is generated to remind the user for the periodical first time of $T_1$, after an internal timer is set to have a time-up period equivalent to a period selected from the periods $T_{2A}$, $T_{2B}$, $T_{2C}$ and $T_{2D}$ according to a content of the reminding control signal XX 38 (step S10).

Consequently, the reminding call is carried out for the first time $T_1$ by selecting one apparatus from the speaker 26, the LED 27, and the vibrator 28 according to the selecting signal SL stored in the PROM 23, while the internal timer times the second time $T_2$ selected from $T_{2A}$, $T_{2B}$, $T_{2C}$ and $T_{2D}$. Then, the decoder 21 determines whether the reset button 29 is pressed on or not (step S13), and whether the internal timer finishes the time-up of the above set second time $T_2$ (step S14). In a case where the reset button 29 is not pressed on during the first time $T_1$, and the set second time $T_2$ is elapsed without the pressing-on of the reset button 29 (step S11), the decoder 21 controls the internal timer to be reset (step S12). Then, operation is returned to the step S10, wherein the second reminding call is carried out for the next first time $T_1$, while the internal timer is driven to time the next second time $T_2$. This reminding operation is repeated by non-limited times, unless the reset button 29 is pressed on by the user.

When the reset button 29 is pressed on by the user, the decoder 21 detects it to exit from a loop of the steps S10, S13, S11, S12, and S10, so that the periodical reminding call finishes to remind the user. At this time, the decoder 21 resets the internal timer (step S14), and the reminding call is controlled to stop, if the reminding operation continues (if "YES" is found at the step S15), while the reminding control signal XX 38 stored in the memory region 24a of the RAM 24 is erased instantly (step S17), if the reminding operation does not continue. Then, this operation is returned to the step S1.

During this operation, if the message 37 included in the received signal includes data to be displayed on the LCD 31, the CPU 30 receives the data which are then displayed on the LCD 31.

The reminding time signals 45 to 48 may be replaced by the reminding time signals 55 to 58 as shown in Fig. 4, wherein the second time $T_2$ is set to be a fixed period common to the reminding time signals 55 to 58, while the first time $T_1$ is changed to be $T_{1A}$, $T_{1B}$, $T_{1C}$, and $T_{1D}$ according to a content of the reminding control signal XX 38 as follows.

| REMINDING CONTROL SIGNAL 38 | | REMINDING TIME SIGNALS 55 TO 58 | |
|---|---|---|---|
| X | X | ON | PERIOD |
| 0 | 0 | $T_{1A}$ | $T_2$ |
| 0 | 1 | $T_{1B}$ | $T_2$ |
| 1 | 0 | $T_{1C}$ | $T_2$ |
| 1 | 1 | $T_{1D}$ | $T_2$ |

As described above, the degree of an importance is transmitted from a caller to a callee by changing a "high" duration of a reminding call, a period thereof, etc. Consequently, the following reminding modes are possible to be carried out.

(1) An important message such as an appointment, a business information, etc. is supplied from a caller to a callee by use of a periodical reminding call, while an ordinary message which is not so important is supplied from the caller to the callee by use of an ordinary calling alert. Accordingly, the caller is not always to respond to the call by discriminating the important and ordinary messages, when the caller can not spare a time to do so due to the busiest state.

(2) In the preferred embodiment, the first to fourth class emergencies can be classified by use of the reminding time signals having different "high" durations and periods as shown in Figs. 3 and 4.

Although the invention has been described with respect to specific embodiment for complete and clear disclosure, the appended claims are not to be thus limited but are to be construed as embodying all modification and alternative constructions that may occur to one skilled in the art which fairly fall within the basic teaching herein set forth.

## Claims

1. A control apparatus for a call reminder in a paging system, comprising:
means for detecting a reminding control signal in a signal received in a paging receiver;
means for determining a conduct of a periodical reminding call as a result of detecting said reminding control signal;
means for reminding a user carrying said paging receiver to respond to said received signal; and
means for driving said reminding means to remind said user in a driving manner selected from a periodical reminding mode and an ordinary calling mode as a result of determining said conduct.

2. A control apparatus for a call reminder in a paging system, according to claim 1, wherein:
said driving means drives said reminding means to operate in accordance with a reminding time signal having a waveform selected from a first signal having a fixed "high" duration and a period changeable according to the degree of an importance, and a second signal having a fixed period and a "high" duration changeable according to said degree.

3. A control apparatus for a call reminder in a paging system, according to claim 1 or 2, wherein:
said reminding means includes an audio apparatus, a visual apparatus, and a vibrator; and
said driving means selects at least one from said apparatus of said reminding means to be driven according to a selecting signal included in said received signal.

4. A paging receiver, comprising:
means for detecting from a paging signal a paging number assigned to said receiver to produce a page detect signal;
means responsive to said page detect signal for generating an initial alert signal for a first predetermined period of time;
means for generating a reminder alert signal for a second predetermined period of time when a third predetermined period of time has elapsed after the cessation of said initial alert signal;
means for detecting from said paging signal a reminding control signal; and
means responsive to said reminding control signal for charging the length of either one of said first, second and third predetermined periods of time.

5. A paging receiver, comprising:
means for detecting from a received signal a paging number assigned to said receiver to produce a detect

signal;
means responsive to said detect signal for generating an initial alert signal;
means for detecting a reminding control signal in said received signal to produce a detected control signal; and
means responsive to said detected control signal for generating a reminder alert signal subsequent to the cessation of said initial alert signal.

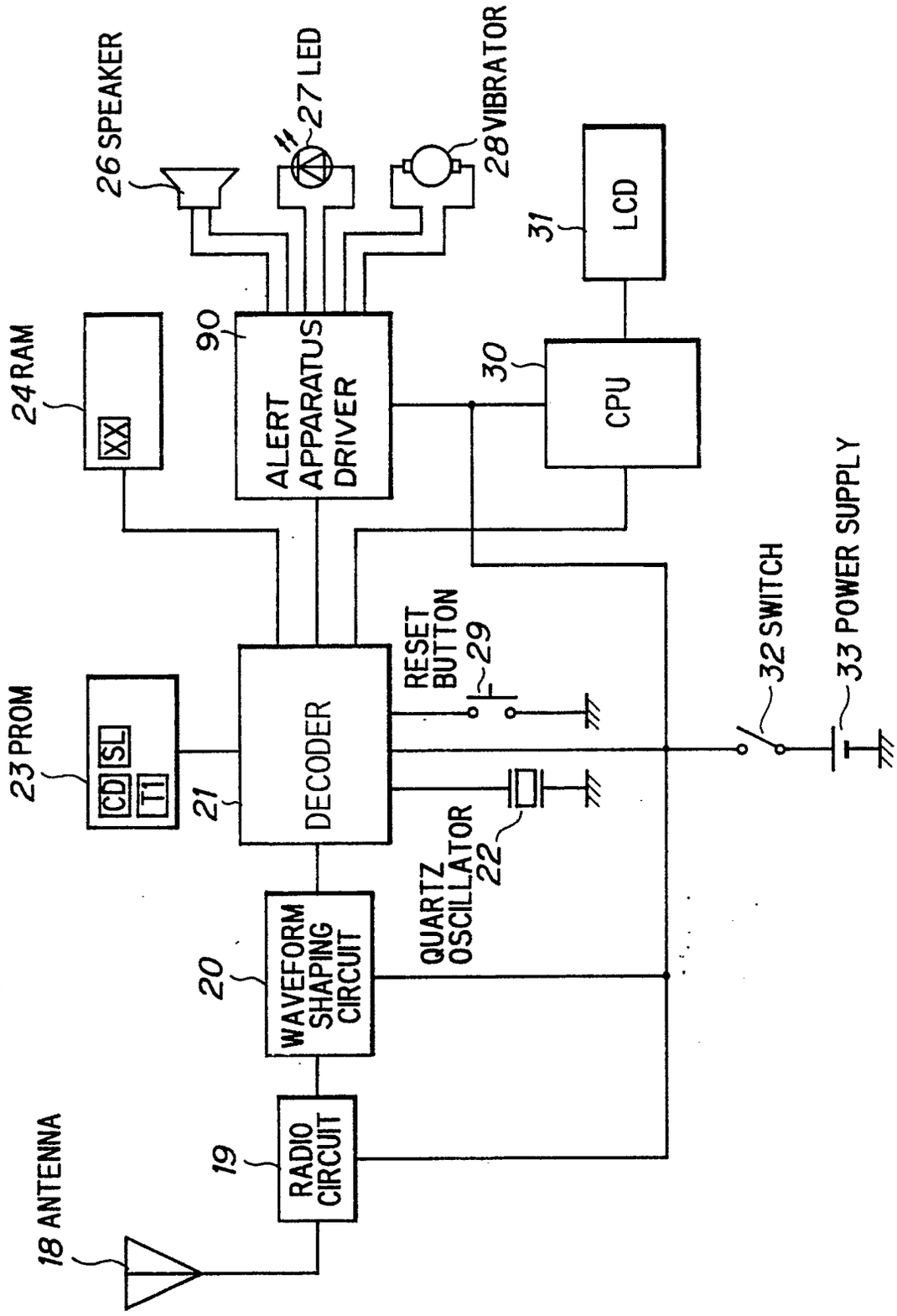
18 ANTENNA
19
RADIO CIRCUIT
20
WAVEFORM SHAPING CIRCUIT
21
DECODER
23 PROM
CD
SL
TI
24 RAM
XX
90
ALERT APPARATUS DRIVER
26 SPEAKER
27 LED
28 VIBRATOR
30
CPU
31
LCD
RESET BUTTON
29
QUARTZ OSCILLATOR
22
32 SWITCH
33 POWER SUPPLY

FIG. 1

FIG. 2

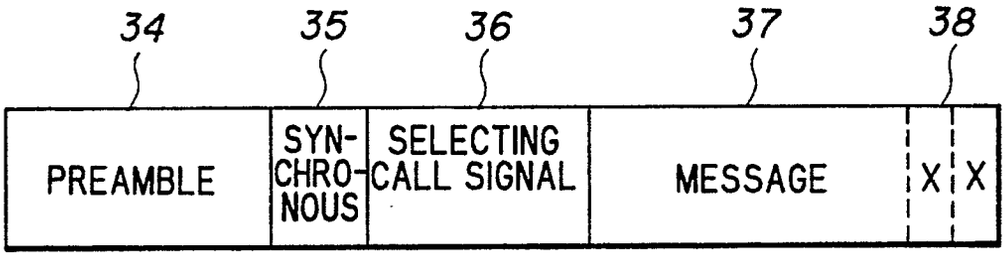
34
35
36
37
38
PREAMBLE
SYN-CHRO-NOUS
SELECTING CALL SIGNAL
MESSAGE
X
X

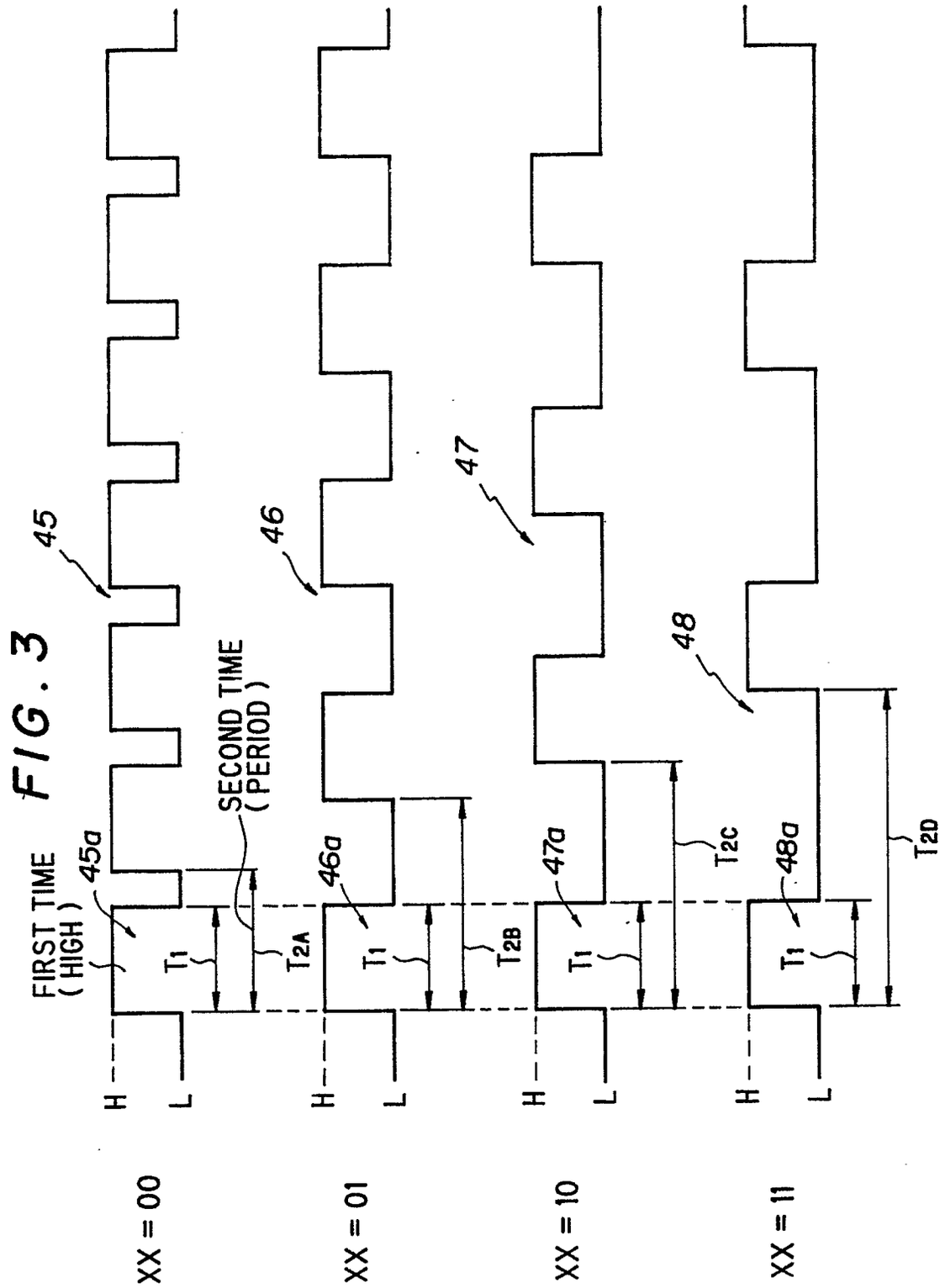
45
46
47
48
45a
46a
47a
48a
FIRST TIME
( HIGH )
SECOND TIME
( PERIOD )
T1
T2A
T2B
T2C
T2D
H
L
XX = 00
XX = 01
XX = 10
XX = 11

FIG. 3

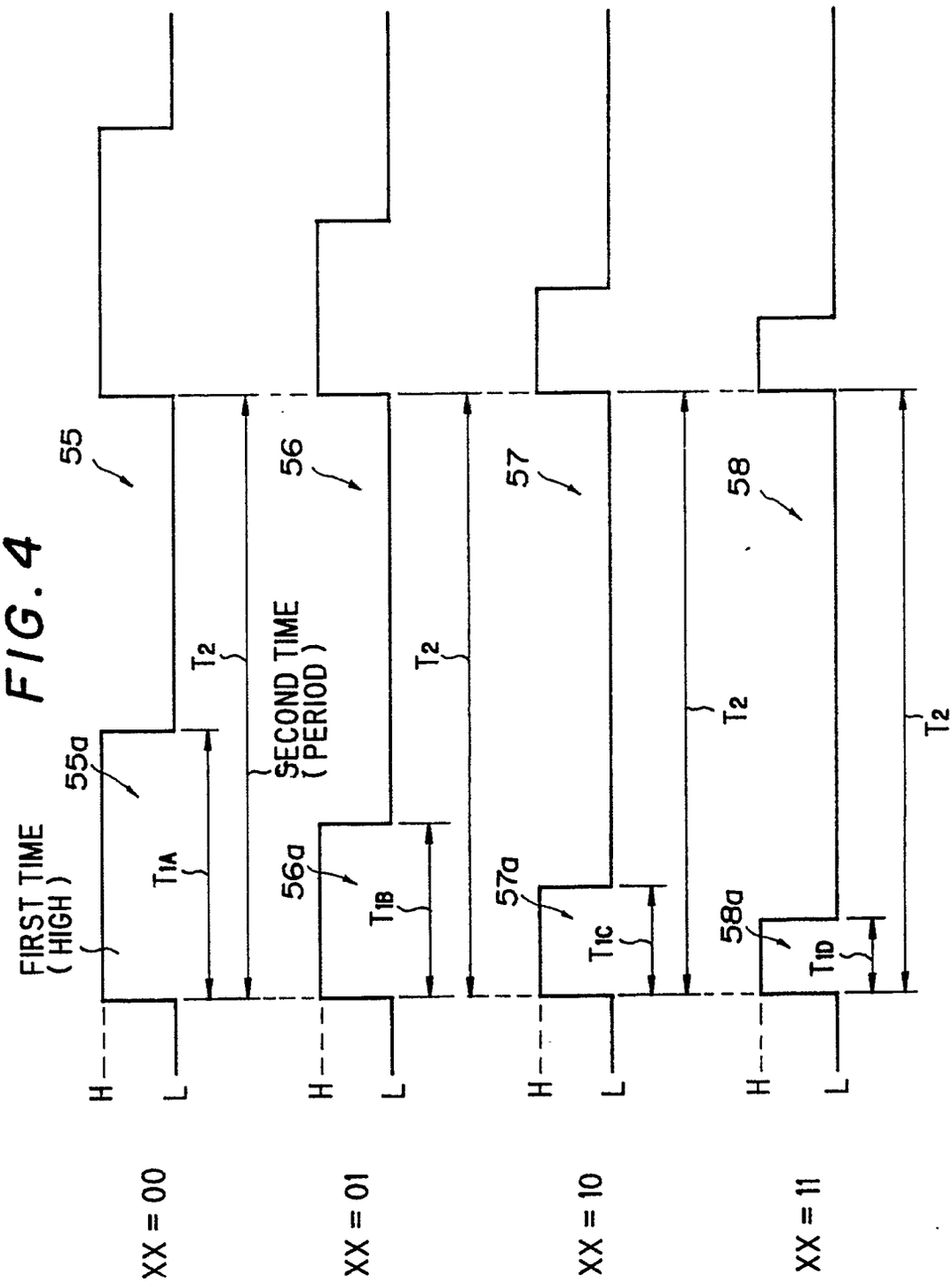
FIG. 4
FIRST TIME
( HIGH )
SECOND TIME
( PERIOD )
55
55a
56
56a
57
57a
58
58a
T1A
T1B
T1C
T1D
T2
H
L
XX = 00
XX = 01
XX = 10
XX = 11

FIG.5

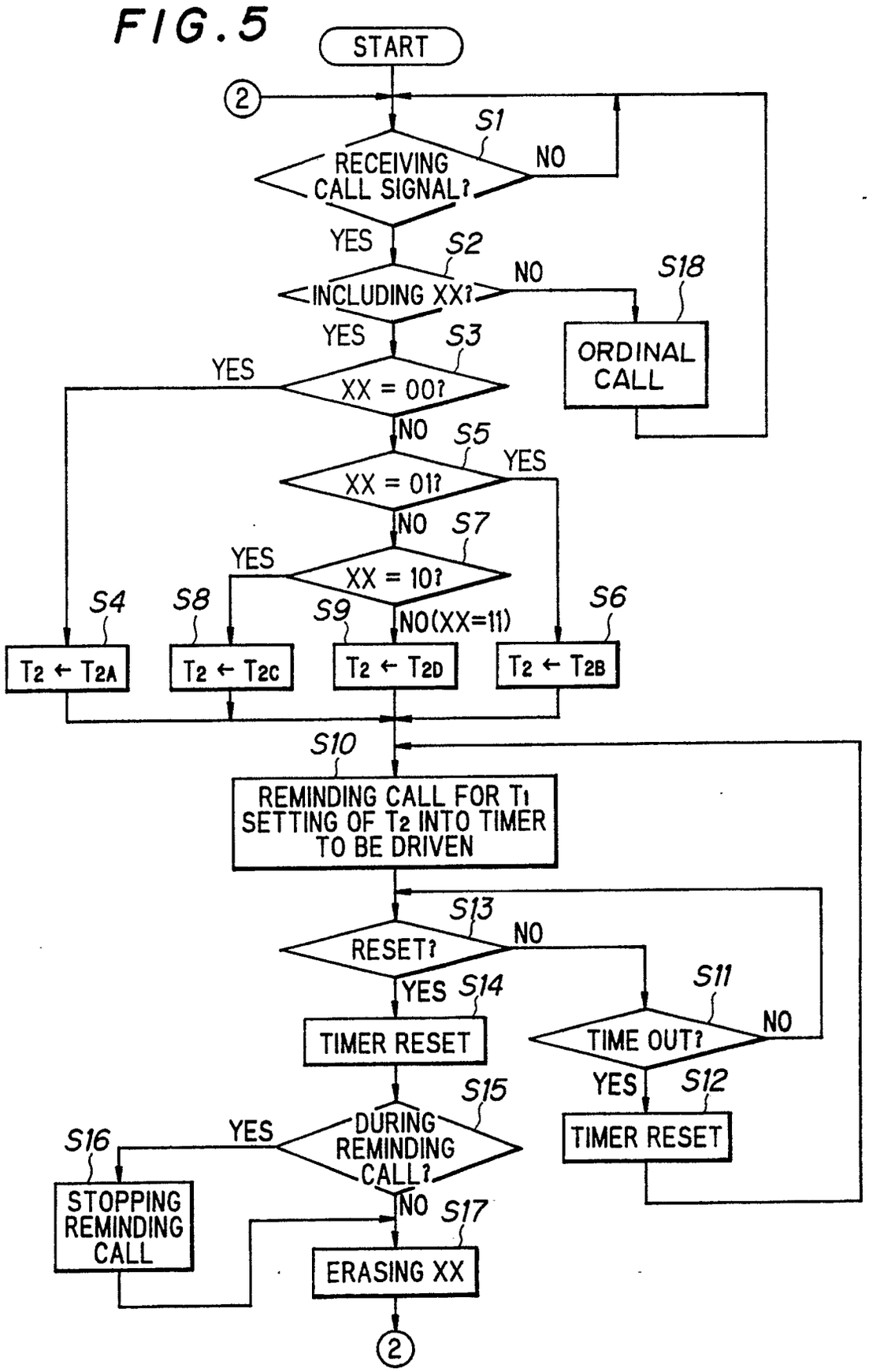
START
2
S1
RECEIVING CALL SIGNAL?
NO
YES
S2
INCLUDING XX?
NO
S18
ORDINAL CALL
YES
S3
XX = 00?
YES
NO
S5
XX = 01?
YES
NO
S7
XX = 10?
YES
NO(XX=11)
S4
S8
S9
S6
T2 ← T2A
T2 ← T2C
T2 ← T2D
T2 ← T2B
S10
REMINDING CALL FOR T1 SETTING OF T2 INTO TIMER TO BE DRIVEN
S13
RESET?
NO
YES
S14
TIMER RESET
S11
TIME OUT?
NO
YES
S12
TIMER RESET
S15
DURING REMINDING CALL?
YES
S16
STOPPING REMINDING CALL
NO
S17
ERASING XX
2

European Patent Office

# EUROPEAN SEARCH REPORT

Application Number

EP 90 11 1666

## DOCUMENTS CONSIDERED TO BE RELEVANT

| Category | Citation of document with indication, where appropriate, of relevant passages | Relevant to claim | CLASSIFICATION OF THE APPLICATION (Int. Cl.5) |
|---|---|---|---|
| D,Y | US-A-4 701 759 (M. NADIR et al.)<br>* figure 1; column 5, lines 27-42 *<br>--- | 1,4,5 | G 08 B 3/10 |
| Y | EP-A-0 265 064 (NEC CORP.)<br>* figure 4; abstract *<br>--- | 1,4,5 | |
| A | NEC RESEARCH AND DEVELOPMENT no. 77, April 1985, Tokyo, JP; T. MORI et al.: "Information Display Pager" * abstract *<br>--- | 1 | |
| A | GB-A-2 146 153 (NEC CORP.)<br>* figure 3; abstract *<br>----- | 3 | |

TECHNICAL FIELDS SEARCHED (Int. Cl.5)

G 08 B
H 04 Q

The present search report has been drawn up for all claims

| Place of search | Date of completion of the search | Examiner |
|---|---|---|
| BERLIN | 19-09-1990 | BREUSING J |

CATEGORY OF CITED DOCUMENTS

X : particularly relevant if taken alone
Y : particularly relevant if combined with another document of the same category
A : technological background
O : non-written disclosure
P : intermediate document

T : theory or principle underlying the invention
E : earlier patent document, but published on, or after the filing date
D : document cited in the application
L : document cited for other reasons

& : member of the same patent family, corresponding document

EPO FORM 1503 03.82 (P0401)