# United States Patent [19]

**Kocher**

[11] **3,710,590**

[45] **Jan. 16, 1973**


[54] **REFRIGERANT COOLED OIL SYSTEM FOR A ROTARY SCREW COMPRESSOR**


[75] Inventor: **Erich J. Kocher,** Milwaukee, Wis.

[73] Assignee: **Vilter Manufacturing Corporation,** Milwaukee, Wis.



[22] Filed: **July 19, 1971**

[21] Appl. No.: **163,890**

[52] **U.S. Cl.** .....**62/468,** 184/6.16, 418/85, 418/88, 62/84, 62/470

[51] **Int. Cl.**.....**F25b 43/02**

[58] **Field of Search** ...184/6.16; 62/84, 85, 192, 193, 62/468, 470; 418/85, 88



[56] **References Cited**

UNITED STATES PATENTS

| | | | |
|---|---|---|---|
| 2,322,874 | 6/1943 | Nelson | 62/470 |
| 2,846,138 | 8/1958 | Rocklyeft | 62/470 |
| 3,191,854 | 6/1965 | Lowler | 418/88 |
| 3,270,521 | 9/1966 | Rayner | 62/84 |
| 3,379,033 | 4/1968 | Grant | 62/84 |
| 3,408,826 | 11/1968 | Sourmerai | 62/470 |
| 3,408,828 | 11/1968 | Sourmerai | 62/470 |
| 3,535,057 | 10/1970 | Kodra | 418/85 |
| 3,563,051 | 2/1971 | Baumgartner | 62/84 |



*Primary Examiner*—William J. Wye
*Attorney*—James E. Nilles



[57] **ABSTRACT**

A refrigeration system including a positive displacement rotary screw compressor, a condenser, an evaporator, an oil cooler and an oil separator including a sump connected in the compressor discharge line. A pump for circulating oil from the sump through the oil cooler to the compressor and a liquid refrigerant bypass circuit including a pump for supplying liquid refrigerant under pressure in heat exchange relation with the lubricating oil in the oil cooler. The refrigerant discharged from the oil cooler is directed through a desuperheating coil in the oil separator.


**6 Claims, 1 Drawing Figure**

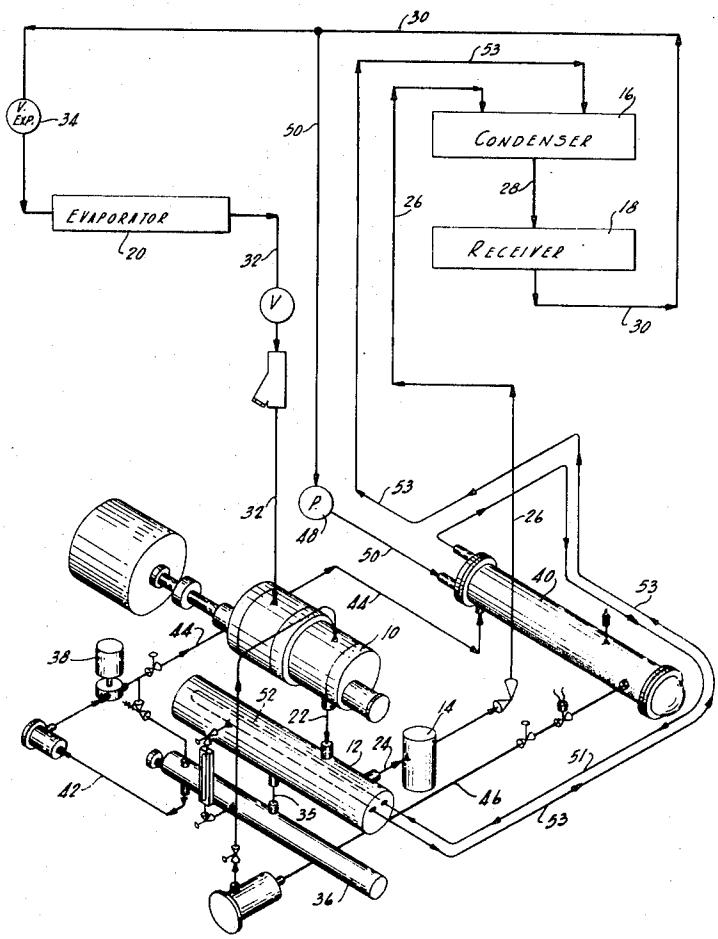

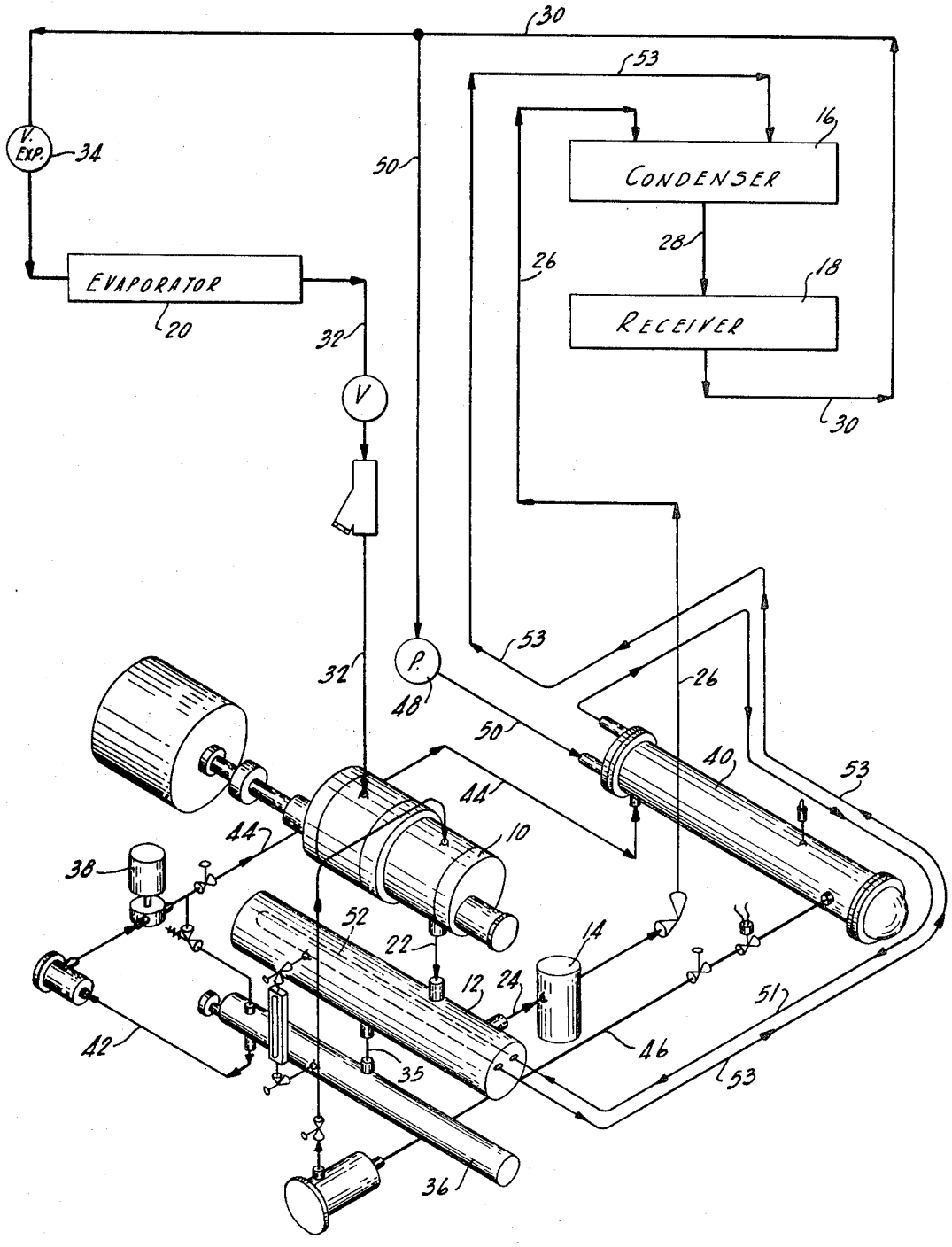


INVENTOR:
ERICH J. KOCHER
BY:
James E. Nilles
ATTORNEY

# REFRIGERANT COOLED OIL SYSTEM FOR A ROTARY SCREW COMPRESSOR

## BACKGROUND OF THE INVENTION

In a positive displacement rotary screw compressor of the type contemplated herein, the lubricating oil is normally provided at a positive pressure directly to the rotors of the compressor. The oil is then carried by the high pressure gaseous refrigerant to an oil separator where the oil is separated from the gaseous refrigerant prior to admission of the gaseous refrigerant to the condenser. The separated oil is then pumped to an oil cooler where it is cooled by passing water in heat exchange relation through the oil cooler. The use of water as a source of coolant is objectionable because the water becomes polluted. Also it has been long recognized that oil coolers must be completely sealed when using water in order to prevent contamination of the oil in the event of leaks in the oil cooler. This is particularly significant in a screw type compressor wherein the lubricant is admitted directly into the gaseous refrigerant flow path in the compressor. If the lubricant is contaminated by the admission of water, it will also effect the compressor.

## SUMMARY OF THE INVENTION

The refrigeration system of the present invention is concerned primarily with the cooling of a positive displacement rotary screw compressor. The refrigerant system generally includes an oil separator, condenser, high pressure receiver, expansion valve, and an evaporator. The lube oil is pumped from a sump connected to the oil separator directly into the compressor. An oil cooler is provided in the lubrication line between the pump and the compressor to cool the lubricant prior to admission to the compressor. The lube oil in the oil cooler is cooled by pumping high pressure liquid refrigerant into the oil cooler. The liquid refrigerant evaporated in the oil cooler passes through the desuperheater coil in the oil separator and is then conducted directly back to the condenser.

One of the primary advantages of this system is that the high pressure liquid refrigerant in the oil cooler is evaporated at condenser temperature, thus assuring that the oil cooler will not be over-cooled. Also by providing maximum cooling of the lubrication oil prior to entry into the compressor, high volumetric efficiency is achieved while maintaining the discharge gas temperature high enough to assure high efficiency of oil separation in the oil separator. The compressor discharge gaseous refrigerant can never be reduced below condensing temperature and will always be in a gaseous state as it passes through the oil separator. The efficiency of oil separation in the oil separator is enhanced by using a desuperheating coil to reduce gaseous refrigerant temperature.

Other advantages of the present invention will become apparent from the following description when read in connection with the accompanying drawing in which:

The single FIGURE shown is a diagrammatic view of a refrigeration system for a positive displacement, rotary screw compressor with the lubricating oil cooling circuit of this invention.



## DESCRIPTION OF THE INVENTION

A refrigeration system of the type contemplated herein generally includes a positive displacement, rotary screw compressor **10**, a primary oil separator **12**, a secondary oil separator **14**, a condenser **16**, a high pressure receiver **18**, and an evaporator **20**. The system is connected in series by refrigerant conduits **22**, **24**, **26**, **28**, **30** and **32** to provide a closed circuit for the refrigerant. An expansion valve **34** is normally provided in the receiver evaporator conduit **30**. The operation of the refrigerating system is generally well known and does not require any further explanation herein.

The lubricating oil circuit for the compressor **10** includes a sump **36** connected by a conduit **35** to receive oil from the primary separator **12**, a pump **38** connected to the sump **36** by a conduit **42** and an oil cooler **40** connected to the pump **38** by a conduit **44**. The lubricating oil is drawn from the sump **36** by means of the pump **38** through the conduit **42**, and pumped from the pump **38** to the oil cooler **40** through the conduit **44**. The now cooled oil is forced from the oil cooler **40** by the pump **38** to the compressor **10** through a conduit **46**. Lubricating oil is thus provided directly to the compressor **10** at a reduced temperature and at a positive pressure. The lubricating oil as it enters the compressor is carried by the gaseous refrigerant in the compressor **10** to the oil separators **12** and **14**.

In accordance with the invention, liquid refrigerant is used to cool the oil cooler **40** and the oil separator **12**. In this regard the liquid refrigerant is pumped by means of a second pump **48** through a by-pass conduit **50** provided between the high pressure liquid refrigerant conduit **30** and the oil cooler **40**. The liquid refrigerant is partially evaporated in the oil cooler **40** as it passes in heat exchange relation with the lubricating oil in the oil cooler. The refrigerant is discharged from the oil cooler **40** through oil cooler discharge conduit **51** to a desuperheating coil **52** in the oil separator **12**. The refrigerant discharged from the oil separator is conducted directly back to the condenser **16** through conduit **53**. The high pressure liquid refrigerant which is pumped through the oil cooler **40** and desuperheating coil **52** is evaporated at all times at a temperature no less than condenser temperature, thus excessive cooling of lubricating oil is prevented. It should be noted that in the event of a leak occurring in the oil cooler **40**, no adverse effect will result since any refrigerant that is picked up by the lubricating oil is carried into the compressor and is separated from the oil when it passes through the oil separator.

In operation, the refrigerating system operates in a conventional manner. Gaseous refrigerant discharged from the compressor **10** through conduit **22** passes through the oil separator **12**, conduit **24**, and oil separator **14** in a gaseous state. Lubricating oil contained in the gaseous refrigerant is separated and allowed to flow to the oil sump **36** through conduit **35**. The high pressure gaseous refrigerant then enters the condenser **16** through conduit **26**.

The liquid high pressure refrigerant passes from the condenser **16** through conduit **28** to the high pressure receiver **18** and through the high pressure liquid refrigerant conduit **30** and the expansion valve **34** to the evaporator **20**. The low pressure gaseous

refrigerant from the evaporator passes through the suction line **32** back to the compressor **10**.

The compressor **10** is cooled by means of the lubrication oil pumped from the sump **36** by the pump **38** through conduits **42** and **44** to the oil cooler **40**. The cooled oil is forced under pressure through conduit **46** directly into the compressor **10** where it comes in direct contact with the gaseous refrigerant in the compressor. The lubricating oil is picked up by the high pressure gaseous refrigerant and is discharged from the compressor into the discharge conduit **26**.

The temperature of the lubricating oil is reduced by by-passing high pressure liquid refrigerant from conduit **30** through by-pass conduit **50** to the oil cooler **40**. The liquid refrigerant is pumped by means of the pump **44** through the oil cooler **40**. The refrigerant discharged from the oil cooler **40** passes through conduit **51** into the desuperheating coil **52** in the oil separator. The refrigerant is substantially completely evaporated in the oil superheater coil and is then passed through conduit **53** to the condenser **16**. The liquid refrigerant passes through the oil cooler in heat exchange relation with the lubrication oil and through the desuperheating coil reducing oil temperature to a temperature no less than condenser temperature.

## RESUME

The present invention provides for the cooling of the lubricating oil for a screw type compressor by using liquid refrigerant. This eliminates the pollution problem incident to the use of water. The oil cooler does not have to be absolutely sealed since the refrigerant will not contaminate the compressor. The capacity of the compressor will remain the same because of the use of high pressure liquid refrigerant discharged from the condenser. Oil separation in the oil separator is improved by including a desuperheated coil in the oil separator which is connected to the refrigerant discharge conduit from the oil cooler.

I claim:

**1**. In a refrigeration system including a rotary screw compressor,

a condenser and an evaporator connected in series,

a lubricating oil cooling circuit for cooling and lubricating oil for said compressor,

said circuit comprising:

an oil cooler,

a lubricating oil conduit connecting said oil cooler to said compressor,

a lubricating oil pump in said conduit for pumping oil from said compressor through said oil cooler and back to the compressor,

a liquid refrigerant bypass conduit connecting said condenser discharge liquid refrigerant to said oil cooler for passing in heat exchange relation with said lubrication oil in said oil cooler,

an oil cooler refrigerant discharge conduit connecting said oil cooler to said condenser,

and a liquid refrigerant pump in said bypass conduit for pumping liquid refrigerant through said bypass conduit to said oil cooler.

**2**. The system according to claim **1** wherein said lubricating oil cooling circuit includes an oil separator connected to said compressor and a de-superheater coil in said oil separator, said oil cooling refrigerant discharge conduit being connected through said de-superheater coil to said condenser.

**3**. A refrigeration system comprising: a positive displacement, rotary screw compressor, an oil separator connected to receive high pressure gaseous refrigerant discharged from said compressor and to separate the lubricating oil therefrom, and oil sump connected to receive the separated oil from said separator, a condenser connected to receive high pressure gaseous refrigerant from said oil separator and to condense the same to a high pressure liquid refrigerant, and an expansion valve connected to the condenser to expand the condensed refrigerant to a low pressure refrigerant, an evaporator connected to receive the low pressure refrigerant and to evaporate the same for delivery to said compressor, a lubricating oil circuit connected to supply oil at a reduced temperature directly to the compressor, said circuit including an oil pump connected to the sump to pump oil under pressure to the compressor, an oil cooler connected to receive oil from the oil pump prior to admission to the compressor, a by-pass line connected to deliver high pressure liquid refrigerant to the oil cooler and a refrigerant by-pass pump in said by-pass line to pump liquid refrigerant through said oil cooler in heat exchange relation with said oil.

**4**. The system according to claim **1** including a desuperheating coil in said oil separator, and said oil cooler including a refrigerant discharge conduit connected to said desuperheating coil.

**5**. The system according to claim **1** wherein said oil cooler includes a refrigerant discharge conduit connected to said condenser.

**6**. The system according to claim **4** wherein said desuperheating coil includes a refrigerant discharge conduit connected to said condenser.

* * * * *