(19) Europäisches Patentamt
European Patent Office
Office européen des brevets

(11) **EP 4 421 425 A1**

(12) **EUROPEAN PATENT APPLICATION**

(43) Date of publication:
28.08.2024 Bulletin 2024/35

(21) Application number: **24159688.1**

(22) Date of filing: **26.02.2024**

(51) International Patent Classification (IPC):
F25D 23/02 *(2006.01)*

(52) Cooperative Patent Classification (CPC):
F25D 23/026; A47F 3/0434; F25D 23/021; F25D 2400/10

(84) Designated Contracting States:
AL AT BE BG CH CY CZ DE DK EE ES FI FR GB GR HR HU IE IS IT LI LT LU LV MC ME MK MT NL NO PL PT RO RS SE SI SK SM TR
Designated Extension States:
BA
Designated Validation States:
GE KH MA MD TN

(30) Priority: **24.02.2023 IT 202300003276**

(71) Applicant: **Valentini Glass & Components S.r.l.**
25011 Calcinato (IT)

(72) Inventors:
- **VALENTINI, Walter**
  25011 Calcinato (BS) (IT)
- **VALENTINI, Claudio**
  25011 Calcinato (BS) (IT)
- **MAZZARA, Stefano**
  25124 Brescia (BS) (IT)

(74) Representative: **Autuori & Partners S.R.L.**
Strada del Megiaro, 261
36100 Vicenza (VI) (IT)

(54) COVERING SYSTEM FOR A HORIZONTAL REFRIGERATED COUNTER, AS WELL AS COVERING FOR REFRIGERATED COUNTER AND METHOD FOR MANUFACTURING THEREOF

(57) A system for obtaining a cover for a horizontal refrigerated counter, the refrigerated counter comprising a base (2) substantially parallelepiped shaped with an upper opening so as to define a vacant peripheral edge (5). The system comprising at least one first glass sheet (50) comprising at least one planar portion (51) and at least one curved portion (52) and at least one pair of first support profiles (20) for said at least one glass sheet (50) designed to be operatively fixed with the base (2) so as to remain arranged facing each other. Each profile (20) having at least one first substantially straight section (21) defining a respective first and second axis (**X, X'**). The planar portion (**51**) of the glass sheet (**50**) comprises a pair of slider elements (**25**), the system further comprises a pair of guide elements (**30**) operatively coupled with the straight section (**21**) of the profile (**20**) so that the pair of guide elements (**30**) are arranged facing each other and so that they interact with the pair of slider elements (**25**) to guide the sliding of the glass sheet (**50**) along a direction (**d**) substantially parallel to the axes (**X, X'**) between an open position and a closed position.

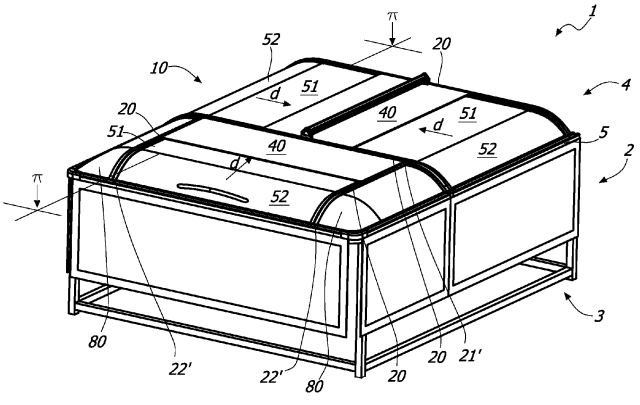

FIG. 1

EP 4 421 425 A1

Description

Field of the invention

[0001] The present invention relates to the technical field of horizontal well refrigerator counters and in particular it relates to a system for providing the cover for a refrigerated counter and a refrigerated counter comprising such covering system. Furthermore, the invention relates to a method for providing a cover of a refrigerated counter.

State of the Art

[0002] The horizontal well refrigerated counters generally comprise a substantially parallelepiped shaped base and an upper cover. Among the various types, particularly valued are those in which refrigerated counters comprise an upper cover made of glass.

[0003] In this manner, on the one hand the users may see the contents of the counter without opening the cover and, on the other hand, the refrigerated counter has a pleasant aesthetic appearance. Such covers provide for slidable glasses so as to allow the user access to the contents in the counter.

[0004] Among glass covers, those comprising curved glasses are particularly valued due to their high aesthetic appeal.

[0005] The known systems for providing such type of cover comprise a plurality of arched and superimposed lateral guides designed to guide the rotation of the curved glasses on opposite sides.

[0006] Such systems can be improved on various aspects, with particular reference to the aesthetic appeal, safety for the users, manufacturing costs as well as the ease of assembly.

[0007] For example, the assembly method is particularly long and complicated given that there arises the need to keep the glass sheets during the installation steps. As a matter of fact, to mount such covering systems, there arises the need to fix a first lateral guide to the base, insert into the guide the edge of a curved glass sheet, maintain the curved glass sheet in such position, provide the second lateral guide and insert it on the opposite edge of the glass sheet and then fix the second guide to the base.

Summary of the invention

[0008] The object of the present invention is to overcome the drawbacks outlined above by providing a covering system for refrigerated counters that is highly effective and relatively cost-effective.

[0009] A further object of the present invention is to provide a covering system for refrigerated counters that is particularly versatile.

[0010] A further object of the present invention is to provide a covering system for refrigerated counters that has high aesthetic appeal.

[0011] A further object of the present invention is to provide a covering system for refrigerated counters that is simple and quick to assemble;

[0012] A further object of the present invention is to provide a covering system for refrigerated counters that is simple to manufacture;

[0013] A further object of the present invention is to provide a method for manufacturing the cover of refrigerated counter that is highly effective and relatively cost-effective.

[0014] A further object of the present invention is to provide cover for a refrigerated counter that is highly effective and relatively cost-effective.

[0015] These and other objects which will be more apparent hereinafter, are attained by the covering system for a refrigerated counter and/or a method for manufacturing the cover for refrigerated counter and/or a cover for refrigerated counters and/or a refrigerated counter as described and/or claimed and/or illustrated herein.

[0016] The dependent claims relate to advantageous embodiments of the invention.

Brief description of the drawings

[0017] Further characteristics and advantages of the invention will be more apparent in light of the detailed description of some preferred but non-exclusive embodiments of the invention, illustrated by way of non-limiting example with reference to the attached drawings, wherein:

FIG. 1 is a view of an example of a horizontal well refrigerated counter **1** with a base **2** and a cover **10;**
FIG. 2 is a schematic view of some details of the cover **10;**
FIG. 3 is an exploded view of some details of the cover **10** comprising a flat glass sheet **40** and a curved glass sheet **50;**
FIG. 4 is an enlarged view of some details of FIG. 3;
FIG. 5 is an enlarged view of some details of FIG. 3, with in **FIG. 6** an enlarged view of some details of FIG. 5.

Detailed description of some preferred embodiments

[0018] With reference to the attached figures, herein described is a cover **10** to be used in refrigerated counters **1** of the horizontal well type. In particular, the cover **10** of the present invention will be particularly suitable for use in refrigerated counters of the type with remote motor. For example, the refrigerated counter **1** may be a remote island.

[0019] In any case, the refrigerated counter **1** may comprise a base **2** and the cover **10.**

[0020] In particular, the base **2** may have a substantially parallelepiped shape and it may therefore comprise a lower area **3** designed to come into contact with the

floor and an upper area **4** with an upper edge **5.** In greater detail, the edge **5** may support the cover **10.**

[0021] The refrigerated counter **1** may have different sizes while maintaining its substantially rectangular shape in plan view. As a matter of fact, as better explained hereinafter, the cover **10** may be modular.

[0022] Described below is a system **11** for providing the cover **10** which may comprise a plurality of parts which can be coupled to each other. In other words, the system **11** may be modular.

[0023] The cover **10** may be at least partially or entirely transparent.

[0024] Suitably there may therefore be provided for at least one glass sheet **50** movable between a closed position in which it prevents access into the refrigerated counter **1** and an open position in which it allows access thereinto.

[0025] It is clear that a handle may be provided for in a per se known manner to move the glass sheet **50.**

[0026] According to a particular aspect of the invention, the glass sheet **50** may comprise at least one planar portion **51** and at least one curved portion **52.** Preferably, the glass sheet **50** may consist of such planar **51** and curved **52** portion.

[0027] In particular, the planar portion **51** may define a plane π. The latter may be substantially parallel to the floor in use.

[0028] In general, the cover **10** may have a main extension in such plane π or parallel thereto. The expression main extension is used to indicate that the horizontal size, that is along such plane π or parallel thereto, may be significantly greater than the vertical size, that is orthogonal to such plane π.

[0029] Preferably, in use, such plane π may be parallel to the edge **5** and, even more preferably, it may be parallel and spaced apart therefrom.

[0030] Suitably, the height of the cover **10** may be substantially equal to the height of the curved portion **52.** Such height may correspond to the distance between the plane π and the edge **5.**

[0031] For example, such height may be about 10-15 cm.

[0032] Generally, the edge **5** corresponds to the so-called "loading line".

[0033] Advantageously, this will allow to prevent the contents of the refrigerated counter from "rubbing" with the flat part **51** of the slidable glass sheet **50.** Such drawback is known in known covers obtained with slidable-plane glass sheets.

[0034] Furthermore, the flat portions of the glass sheets, that is the portion **51** and also the sheet **40** if present, may be spaced apart from the loading line avoiding the formation of condensate on the glasses, as it instead happens with glass sheets which slide in proximity of the loading line.

[0035] Furthermore, such configuration of the glass sheet **50** with the curved portion **52** may allow to obtain a high aesthetic appeal.

[0036] Lastly, the handle may be arranged at such curved portion **52** therefore being easy to operate for the operator.

[0037] The glass sheet **50** may therefore slide along a direction **d** lying on the plane π or substantially parallel to the latter. In this manner, advantageously, the user may open and close the counter **1** by sliding the glass sheet **50** along such sliding direction **d.** Actually, the direction **d** may be substantially parallel to the floor in which the refrigerated counter is positioned.

[0038] Essentially, the system **11** may comprise at least one pair of support profiles **20.** In particular, the profiles **20** may support the glass sheet **50** or the glass sheets **50.**

[0039] In greater detail, each of the profiles **20** may have at least one substantially straight section **21** defining a respective axis **X, X'.** Preferably, such axes **X, X'** may lie on the plane π or in a plane substantially parallel thereto.

[0040] The profiles **20** may further comprise at least one substantially curvilinear section **22.** Possibly, as better explained hereinafter, they may comprise two curved sections **22, 23** arranged on opposite sides with respect to the straight section **21.** Each profile **20** may therefore be substantially arc-shaped with a central straight section **21.**

[0041] Suitably, the profiles **20** may be operatively fixed with the base **2.** For example, the profiles **20** may be fixed with the peripheral edge **5** of the base **2,** preferably at a pair of opposite sections of the peripheral edge **5.** On the other hand, the profiles **20** may be fixed on one side with the edge **5** and on the other to a support profile which may preferably be a support profile **20.**

[0042] Preferably, the profiles **20** may be fixed with the edge **5** at an end **22',** 23' of the curved sections **22, 23.** Such fixing may be obtained in a per se known manner, for example using plates and screws.

[0043] In any case, once the pair of profiles **20** has been fixed, the latter may remain substantially parallel and facing each other.

[0044] As better explained hereinafter, the system **11** may comprise a pair or a higher number of profiles **20.** Furthermore, the system **11** may comprise a single slidable sheet **50** or a plurality of the latter.

[0045] Possibly, the same profile **20** may have the function of supporting the movable sheet **50** and supporting one or more further support profiles **20.** This allows to obtain a modular cover **10.**

[0046] In this latter case, the pair of profiles **20** may each have a single curved section **22** fixed to the edge **5** and an end **21'** of the section **21** fixed to a section **21** of another profile **20.**

[0047] For example, FIG. 1 shows a cover **10** which comprises a first pair of glass sheets **50** slidable along the same direction **d** in opposite directions, and another single glass sheet **50** slidable in a direction **d** perpendicular to the sliding direction **d** of the first pair of sheets **50.**

[0048] Although not shown in the attached figures, the

system **11** may comprise a plurality of pairs of glass sheets **50** all arranged adjacent to each other. Such configuration may be particularly adapted for providing refrigerated counters having a particularly large longitudinal extension found in supermarkets.

[0049] Preferably, as better explained hereinafter, each profile **20** may support two pairs of sheets **50** arranged on opposite sides.

[0050] It is therefore clear that upon varying the number of sheets **50** and profiles **20,** the system **11** may allow to obtain covers **10** having a different extension. In this manner, the system **11** is particularly versatile and cost-effective at the same time.

[0051] Generally, the sliding direction **d** of the glass sheets **50** may be parallel to the axes **X** and **X'** of the sections **21** of the support profiles **20** which support the sheet.

[0052] In greater detail, when the sheet **50** is in closed position, the planar portion **51** may be at the straight section **21** and the curved portion **52** may be at the curved section **22, 23** of the pair of support profiles **20.**

[0053] On the other hand, when the sheet **50** is in open configuration, the curved portion **52** may be at the straight section **21.** In this case, therefore an opening will be formed between the edge **5** and the curved portion **52** to allow access into the refrigerated counter **1.**

[0054] Advantageously, the system **11** may comprise guide elements **30** to guide the sliding of the sheet **50** between the open and closed positions along the direction **d,** that is along a substantially straight direction.

[0055] Preferably, the guide elements **30** may be at least one pair of elements arranged facing each other. Therefore, they may guide the sliding of the sheet **50** on opposite sides.

[0056] According to a preferred but non-exclusive embodiment of the invention, the elements **30** may be operatively coupled with the profiles **20**

[0057] Preferably, the elements **30** may be operatively coupled with the profiles **20** at the straight section **21.** Possibly, the section **21** may be shaped so as to define the elements **30.**

[0058] According to a particular aspect of the invention, the glass sheet **50** may comprise at least one pair of slider elements **25.**

[0059] Preferably, the planar portion **51** of the sheet **50** may comprise the slider elements **25.**

[0060] The guide elements **30** and the slider elements **25** may be mutually configured to guide the sliding of the glass sheet **50** along the direction **d** between the closed and open position.

[0061] Preferably, the guide elements **30** may therefore guide the sliding of the slider elements **25** along the direction **d** or a direction parallel to the direction **d.**

[0062] Preferably, the guide elements **30** may be configured to guide the slider elements **25** alone. More particularly, the guide elements **30** may be configured to interact with the slider elements **25** and/or with the flat portion **51,** and at the same time so as not to interact with the curved portion **52.**

[0063] This characteristic may allow to prevent the elements **30** from hindering the sliding of the sheet **50** along the direction **d.**

[0064] Suitably, the planar portion **51** may have a pair of opposite lateral edge areas **55** which may define the pair of slider elements **25.**

[0065] Although the attached drawings show a continues edge area **55,** it may be discontinuous.

[0066] Furthermore, it is clear that such embodiment is not exclusive. For example there may be provided for longitudinal profiles designed to be coupled to the planar portion **51** defining the slider elements **25** or there may be provided for pins protruding from the edge **55** of the sheet **50.**

[0067] The configuration in which the slider elements **25** are the edge **55** of the sheet **51** is particularly advantageous.

[0068] First and foremost, falling towards the internal of the sheet may be prevented given that there are no profiles or pins inserted into the guides which can break causing the falling and therefore the breakage thereof.

[0069] The creation and the assembly of the system may be particularly simple. As a matter of fact, the operator may simply pick up the sheet and insert it frontally between the guide elements **30.**

[0070] Suitably, the section **21** may support the slider elements **25** to slidably guide them along the axes **X** and **X'.** In this case, the guide elements **30** may comprise such section **21.**

[0071] Such embodiment is not exclusive. For example, the guide elements **30** may comprise at least one pair of substantially planar surfaces having extension along respective longitudinal axes parallel to the plane π designed to support the sliders **25** to slidably guide them.

[0072] Although not shown in the attached figures, there may be provided for a special profile with a longitudinal seat designed to house the sliders **25** and slidably guide them.

[0073] On the other hand, according to a preferred embodiment of the invention, the guide elements **30** may comprise a pair of longitudinal surfaces **32.** The latter may define the axes **X** and **X'.** The surfaces **32** may have a planar extension substantially parallel to or coincident with the plane π.

[0074] In this manner, the system **11** may be particularly simple to install given that there may be substantially used a plurality of profiles **20.**

[0075] Suitably, the surfaces **32** may guide the sliding of the slider elements **25** and at the same time support the latter and therefore the glass sheet **50.**

[0076] In this manner, advantageously, only the profiles **20** may act as a support and guide for the sheets **50.**

[0077] Suitably, the surfaces **32** and the glass sheet **50** may be mutually sized so that during the movement of the glass sheet **50** between the open and closed position, the longitudinal surfaces **32** interact with the planar portion **51,** and so that the longitudinal surfaces **32** do

not interact with the curved portion **52.**

[0078] Preferably upon the movement of the sheet **50,** only the slider elements **25** may interact with the longitudinal surfaces **32.**

[0079] Suitably, when the lateral areas **55** of the planar portion **51** define the slider elements **25,** the lateral areas **55** may interact with the surface **32** so that the latter guides the sliding thereof and supports the weight of the sheet **50.** Preferably, the lateral areas **55** may come into direct contact with the surface **32.**

[0080] Preferably, the surfaces **32** may have an overall length-wise extension along the axes **X** and **X'** equal to the length of the planar portion **51.** However, the surfaces **32** may have a smaller length or they may be discontinuous.

[0081] The longitudinal planar surface **32** may have a particularly small width **L3,** for example measuring approximately 1 or 2 cm, preferably measuring about 10-12 mm.

[0082] According to a particular aspect of the invention, the distance **A** between the opposite guide elements **30** of a pair of profiles **20** may be slightly larger than the width **L2,** that is the width of the curved portion **52.** Furthermore, advantageously, the distance **A** may be slightly smaller than the width **L1** that is than the distance between the ends of the slider **25.**

[0083] In this manner, when the sheet **50** slides from the open position to the closed position, the curved portion **52** - even when it is at the guide elements **30** - will not impact against them.

[0084] For example, the width **L1** may be 1300 mm, the width **L2** may be 1280 mm, the distance **A** may be comprised between **L1** and **L2.** Preferably, the distance **A** may be only slightly larger than **L2,** for example by a few millimetres, so that the contact of the sliders **25** on the surface **32** is maximum.

[0085] Should the sliders **25** be the edges **55** of the portion **51,** the width **L1** may be the width of the planar portion **51** of the sheet **50.**

[0086] Should the guide elements **30** comprise the longitudinal surfaces **32,** the distance **A** may be the distance between the two surfaces **32.**

[0087] In this manner, the portion **51** may always be guided by the surfaces **32** during the sliding between the open and closed position, that is even when the curved portion **52** is at the surfaces **32.**

[0088] Furthermore, thanks to the configuration above, during the installation of the counter, for example during the insertion of the portion **51** into the guide elements **30,** the sheet **50** may always be supported. Therefore, it is not necessary to use special machines or a large number of operators during the installation.

[0089] Suitably, for example as shown in FIG. 4, the glass sheet **50** may have a step **53,** preferably a pair of steps **53.**

[0090] According to a particular aspect of the invention, the step **53** may measure about 10-12 mm. Such value may correspond to half of the difference between the widths **L1** and **L2.** For example, should there be the sliders **55** and the surfaces **32,** the difference between the width **L1** of the portion **51** and the width **L2** of the portion **52** may measure about 20-24 mm.

[0091] Preferably, the planar portion **51** may comprise such step **53.** Preferably, the curved portion **52** may be downstream of the step **53** considering the direction from the open position to the closed position.

[0092] In this manner, the processing of the sheet **50** may be simple and cost-effective.

[0093] According to a particular aspect of the invention, the profiles **20** may include the guide elements **30.** Preferably, the section **21** may comprise the guide elements **30.** More preferably, as shown in the attached figures, the sections **21** of the profile **20** may comprise or define the surfaces **32.**

[0094] For example, as shown in FIG. 6, the section **21** may comprise a longitudinal wall **36.** In use, the wall **36** may remain substantially horizontal while the wall **37** may remain substantially vertical. Suitably, the longitudinal wall **36** may include an upper surface defining the longitudinal support surface **32.**

[0095] The section **21** may further comprise a wall **37** orthogonal to the wall **36.** Suitably, such wall **37** may guide the sliding of the sliders **25,** for example of the edge **55** of the portion **51.**

[0096] In greater detail, the wall **37** may come into contact with the sliders **25,** for example the edge areas **55** of the flat portion **51** of the sheet **50,** so as to avoid the sliding of the sheet **50** along a direction transversal to the axes **X** or **X'** and therefore ensure the sliding along the direction **d.**

[0097] For example, the distance between the walls **37** of two opposite profiles **20** may be substantially equal to the width **L1.**

[0098] The guide elements **30** may therefore comprise the wall **37.**

[0099] Preferably, the wall **37** may cooperate with the longitudinal surface **32** to guide the sliding of the edge **55.** In greater detail, the walls **36** and **37** may cooperate to define a longitudinal seat **31.**

[0100] The guide elements **30** may therefore comprise such seat **31.**

[0101] The section **21** may therefore comprise at least one upper longitudinal wall **39** which may remain arranged substantially facing the lower wall **36.**

[0102] Suitably, such wall **37** may guide the sliding of the sliders **25,** for example of the edge **55** of the portion **51.**

[0103] In greater detail, such wall **39** may retain the slider **25** and/or the edge **55** to prevent it from lifting during the sliding of the sheet **50.**

[0104] The guide elements **30** may therefore comprise the wall **39.**

[0105] Advantageously, the walls **39** and **36** may cooperate to form the longitudinal seat **31.** Preferably, the walls **37, 39** and **36** may cooperate to form the substantially C-shaped longitudinal seat **31.**

[0106] In this manner, the guide elements **30,** which may comprise such seat **31,** may ensure the sliding of the sheet **50** along the direction **d.**

[0107] Irrespective of the above, the support surface **32** may be defined by a plurality of surfaces, not necessarily by a single continuous longitudinal surface. For example, although not shown in the attached figures, there may be provided for a plurality of consecutive longitudinal walls spaced apart from each other.

[0108] Operatively, upon providing the pair of profiles **20** and upon coupling the profiles **20** with the counter **1,** the glass sheet **50** may be slidably inserted along the direction **d** thanks to the guide elements **30.** In other words, the sheet **50** may be inserted frontally and there is no need for using men or means to support and hold it in position during the assembly.

[0109] According to a particular aspect of the invention, there may be provided for at least one pair of substantially curved profiles **70.** Such profiles **70** may be coupled with the profiles **20.** In particular, the profiles **70** may be coupled with the section **22** and/or **23** of the section **20.**

[0110] The profiles **70** may therefore act as an abutment for the portion **52** of the sheet **50**defining the closed position of the latter.

[0111] Suitably, the profiles **70** may comprise a longitudinal abutment surface **71** designed to act as an abutment for at least one part of the portion **52** of the sheet **50.**

[0112] Besides the above, the profiles **70** may have an aesthetic function. As a matter of fact, the profiles **70** may comprise a substantially continuous outer surface **78.**

[0113] According to a particular aspect of the invention, the outer surface **78** may be substantially equal to the outer surface **38** of the section **21.** In this manner, the section **21** and the section **22,** once covered with the profile **70,** may be substantially continuous and the outer surfaces **38, 78** may cooperate to form a single substantially continuous outer surface of the profile **20.**

[0114] According to a particular aspect of the invention, the profile **20** may be formed by more pieces. For example, there may be provided for only the straight section **21** and there may be provided for one or more curved profiles **27** which may be coupled with the section **21** so as to form the curved profiles **22** and/or **23.** Preferably, the profiles **27** may be coupled at one end **21'** of the section **21.**

[0115] Thanks to this characteristic, the provision of the system **11** may be particularly cost-effective.

[0116] Furthermore, as better described below, should the profile **20** be coupled with two opposite edges **5** of the base **2,** the profile **20** may comprise the section **21** and two curved profiles **27** to form the sections **22** and **23.** On the other hand, should the profile **20** be coupled - on one end - with the edge **5** and - with the other end - to another section **21,** the profile **20** may comprise the section **21** and a single curved profile **27** defining the section **22** (or **23**).

[0117] Thanks to this characteristic, the system may be particularly versatile.

[0118] Preferably, for example as shown in FIG. 2, there may be provided for a single shaped profile **28** which may comprise a pair of curved portions **28'** and a substantially straight portion **29** for connecting the curved portions **28'.**

[0119] Upon coupling the shaped profile **28** with a pair of profiles **20,** the latter may cooperate so that the curved portions **28'** define the respective section **22** (or the section **23**) of the pair of profiles **20.**

[0120] In greater detail, the shaped profile **28** may be coupled with the straight sections **21.** Preferably, the curved portions **28'** may be coupled with the ends **21'** of two sections **21** - arranged facing each other - of a pair of profiles **20.**

[0121] In this manner, advantageously, the assembly may be particularly simple.

[0122] Furthermore, thanks to the portion **29,** the framework thus made may be particularly resistant.

[0123] Suitably, the system **11** may further comprise a further covering profile **60** designed to be arranged at the edge **5** and at the edge end **54** of the portion **52** of the glass sheet **50.** The edge **54** may be the horizontal vacant edge, that is substantially perpendicular to the advancement direction.

[0124] The profile **60** may be snap-coupled with the edge 5 in a per se known manner.

[0125] Preferably, the profile **60** may extend over the entire edge **54** between the pair of profiles **20.** The profile **60** may have a cover function so as to confer a high aesthetic appeal to the system **11.**

[0126] Possibly, should there be the shaped profile **28,** the profile **60** may have a cover function and it may be coupled to such shaped profile **28.**

[0127] Preferably, all the outer surfaces, that is the exposed surfaces, may have a pleasant and continuous appearance so as to confer a high aesthetic appeal to the entire system **11.**

[0128] Possibly, the profile **60** may act as an abutment for the glass sheet **50** defining the closed position. Preferably, the profile **60** and the surface **71** may cooperate to define the end-of-stroke of the sheet **50,** that is the closed position.

[0129] The profiles **20** and/or **60** and/or **70** may be partially or fully made of polymeric material. Possibly, such material may be soft so as to provide the closing sealing.

[0130] According to a particular aspect of the invention, there may be provided for a further flat sheet **40.** Such sheet **40** may be positioned at the section **21.**

[0131] Preferably, the sheet may be positioned at the outer surface **38** of the section **21.** More preferably, the sheet **40** may be fixed to the outer surface **38.**

[0132] Advantageously, the sheet **40** may be in a parallel plane and spaced apart with respect to the plane π of the portion **51** of the sheet **50.** In this manner, the sheet **50** may slide between the closed position and the open position remaining below the sheet **40.**

[0133] Suitably, the sheet **40** may be used to support products, label holder or the like.

[0134] Preferably, the section **21** may comprise a longitudinal protuberance **34** extending from the wall **39** orthogonally thereto. Advantageously, the protuberance **34** may therefore define a lateral abutment for the sheets **40.**

[0135] Preferably, the upper surface **38** may support the glass sheet **40.** More preferably, the height of the protuberance **34** may be substantially equal to or slightly larger than the thickness of the glass sheet **40.** This characteristic may allow to protect the glass sheet **40** against possible impacts and/or there may be a visual continuity which results in a high aesthetic appeal of the cover **10.**

[0136] As described above, the system **11** may comprise more than one slidable sheet **50.**

[0137] For example there may be provided for two sheets **50** slidable along opposite directions along the same direction **d.**

[0138] In this case, the elements **30** may be configured to guide both sheets **50.** For example, the section **21** may comprise a pair of parallel and superimposed surfaces **32.**

[0139] In this manner, there may be formed a pair of superimposed longitudinal seats **31.**

[0140] Advantageously, there may be provided for stop elements **31'** of the per se known type so as to prevent sheet **50** - when opened - from impacting against the other sheet **50.**

[0141] In this manner, the same profile **20** may support two opposite sheets **50** (that is that slide along opposite directions of the same direction **d**).

[0142] Furthermore, thanks to this characteristic, the pair of slidable sheets **50** may be equal to each other. Such characteristic allows to optimise the production costs and times of the system **11.**

[0143] Suitably, the profile **20** may comprise the straight central section **21** and a pair of curved sections **22, 23** on opposite sides so that the profile **20** is substantially arc-shaped. Suitably, there may be suitably provided for a plurality of cover profiles **70** designed to be coupled with the curved sections **22** and **23.**

[0144] Irrespective of the above, there may be provided for two sheets **50** slidable along directions **d** parallel to each other.

[0145] Suitably, the section **21** may comprise a pair of guide elements **30** on opposite sides so that each one of the latter may guide an adjacent sheet **50.** In this manner, the two adjacent sheets **50** may slide along directions **d** substantially parallel to each other.

[0146] Preferably, the section **21** may have a pair of opposite longitudinal surfaces **32,** more preferably the section **21** may have a pair of opposite seats **31.**

[0147] In this manner, the same profile **20** may support two adjacent sheets **50** (sliding along parallel directions **d**).

[0148] Possibly, the same profile **20** may support two adjacent sheets **50** and two opposite sheets **50.** In this case, the section **21** may comprise two superimposed seats **31** - on one side - and two superimposed seats **31,** on the opposite side.

[0149] A sheet **50** slidable along a direction **d** and at least one sheet slidable along a direction d perpendicular to the first may be possibly provided for.

[0150] In this case, the profile may comprise the section **21,** whose end **21'** may be coupled to a section **21** of another profile **20** having a perpendicular extension, and a single curved profile **27** defining the section **22** (or **23**) which may be coupled - on one end - with the edge **5** and - with the other end - to another section **21.**

[0151] It is clear that there may be provided for further glass sheets **80,** preferably curved glass sheets which may be interposed between the profiles **20** and the edges **5,** for example as shown in FIG. 5.

[0152] Operatively, the method for assembling the cover may provide for one or more of the following steps:

- providing at least one pair of longitudinal support profiles **20;**
- coupling longitudinal profiles **20** with the edge **5;**
- providing at least one glass sheet **50;**
- inserting the planar portion **51** of the glass sheet **50** into the guide elements, for example into the seat **31.**

[0153] In this manner, the assembly may be frontal and the sheet **50** may be supported by the support profiles **20** with the advantages described above in terms of speed of assembly and saving in terms of men or means.

[0154] Possibly, the assembly method may comprise the steps for providing the profiles **27** and **28** and coupling them with the section **21** to form curved sections **22** and **23** of the profiles **20.**

[0155] In other words, there may be coupled at least one pair of sections 21, a pair of profiles **27** and a profile **28** to form a support frame which may be fixed to the base **2.** Subsequently, the glass sheet **50** may be inserted into the guide elements **30** so that the sheet **50** is supported by the frame.

[0156] Advantageously, the frame may be made with different configuration depending on the needs. As a matter of fact, as described above, there may be provided for any number of profiles **20** which may be directly fixed to the base **2** and/or to other profiles **20.**

[0157] Upon providing the frame, the glass sheets **50** may be inserted. In order to prevent the latter from protruding, there may be provided for abutment profiles operatively coupled with the frame. In other words, they may define the end-of-stroke of the closed position.

[0158] For example, the profiles **70** and/or the profiles **60** may act as an abutment for the glass sheet **50,** preferably for the curved portion **52** thereof.

[0159] Possibly, the assembly method may comprise the steps for preparing a pair of curved cover profiles **70** and coupling of the latter with the curved section **22** and **23.** There may also be provided for a step for providing the profile **60** and coupling thereof with the shaped profile **28.**

[0160] Possibly, there may also be provided for a step for providing the sheet **40** and fixing it to the section **21.**

Such step may be provided before the insertion of the sheets **50** into the guide elements **30.**

[0161] Thanks to such characteristics, the assembly of the cover may be particularly simple and quick.

[0162] Furthermore, the described modularity may allow to repeat such steps for providing covers **10** having a plurality of slidable sheets **50,** for example as shown in FIG. 1.

[0163] The invention is susceptible to numerous modifications and variants all falling within the inventive concept outlined in the attached claims. All details can be replaced by other technically equivalent elements, and the materials can be different depending on the technical needs, without departing from the scope of protection of the invention.

[0164] Even though the invention has been described with particular reference to the attached figures, the reference numbers utilised in the description and in the claims are meant for improving the intelligibility of the invention and thus do not limit the claimed scope of protection in any manner whatsoever.

Claims

1. A system for obtaining a cover **(10)** for a horizontal refrigerated counter, the refrigerated counter comprising a base **(2)** substantially parallelepiped shaped with an upper opening so as to define a vacant peripheral edge **(5),**

the system comprising:

- at least one shaped glass sheet **(50)** comprising at least one planar portion **(51)** defining a plane (π) and at least one curved portion **(52);**
- at least one pair of first support profiles **(20)** for said at least one glass sheet **(50)** designed to be operatively fixed with the base **(2)** so as to remain arranged facing each other,

wherein said at least one first glass sheet **(50)** comprises at least one pair of slider elements **(25);**

wherein the system further comprises a pair of guide elements **(30)** operatively coupled with said pair of first support profiles **(20);**

wherein said at least one pair of guide elements **(30)** and said at least one pair of slider elements **(25)** are mutually configured to guide the sliding of said at least one glass sheet **(50)** along a sliding direction **(d)** parallel to said plane (π) between an open position and a closed position.

2. Covering system according to claim 1, wherein said at least one planar portion **(51)** comprises said pair of slider elements **(25).**

3. Covering system according to claim 2, wherein said at least one planar portion **(51)** of said at least one first glass sheet **(50)** has a pair of lateral edge areas **(55)** defining said pair of slider elements **(25).**

4. Covering system according to any one of the preceding claims, wherein said guide elements **(30)** are configured to interact exclusively with said pair of slider elements **(25).**

5. Covering system according to any one of the preceding claims, wherein said at least one pair of guide elements **(30)** has a mutual distance **(A),** said slider elements **(25)** having a width **(L1)** larger than said distance **(A),** said at least one curved portion **(52)** of said at least one first glass sheet **(50)** having a width **(L2)** smaller than said distance **(A).**

6. System according to any one of the preceding claims, wherein each profile of said pair **(20)** has at least one first substantially straight section **(21)** defining a respective first and second axis **(X, X'),** during the use said first and second axis **(X, X')** being substantially parallel to or coincident with said plane (π), said at least one first section **(21)** of said pair of profiles **(20)** being designed to interact with said pair of slider elements **(25)** to guide them so that said sliding direction **(d)** is parallel to said first and second axis **(X, X'),** said at least one pair of guide elements **(30)** comprising said at least one first section **(21).**

7. Covering system according to the preceding claim, wherein said at least one first straight section **(21)** of said pair of profiles **(20)** comprises a first longitudinal surface **(32)** extending respectively along said first and second **(X, X'),** said pair of first longitudinal surfaces **(32)** being designed to support said pair of slider elements **(25)** during the sliding along said direction **(d).**

8. Covering system according to the preceding claim wherein said pair of first longitudinal surfaces **(32)** of said at least one first straight section **(21)** of said pair of profiles **(20)** have said mutual distance **(A),** said at least one flat portion **(51)** of said at least one first glass sheet **(50)** having a width **(L1)** larger than said distance **(A),** said at least one curved portion **(52)** of said at least one first glass sheet **(50)** having a width **(L2)** smaller than said distance **(A).**

9. System according to claim 7 or 8 wherein said at least one first straight section **(21)** of said pair of profiles **(20)** comprises a first longitudinal seat **(31)** having extension along a first and second axis **(X, X'),** said first longitudinal seat **(31)** including - at the lower part - said first longitudinal surface**(32)** and an upper

surface **(39)** so as to guide said slider elements **(25)** along said direction **(d).**

10. System according to any one of the preceding claims, comprising at least one pair of glass sheets **(50)** slidable substantially along the same direction **(d)** in opposite directions, each profile of said pair **(20)** having at least one first straight section **(21)** defining a respective first and second axis **(X, X'),** said first section **(21)** comprising a first seat **(31)** for said slider elements **(25)** of a first sheet of said pair **(50)** and a second seat **(31)** for said slider elements **(25)** of the second sheet of said pair **(50),** said first and second seat **(31)** being parallel and superimposed.

11. System according to any one of the preceding claims, comprising at least one pair of glass sheets **(50)** slidable substantially along directions **(d)** parallel to each other, at least one profile of said pair **(20)** having a first straight section **(21)** defining a respective first axis **(X),** said first section **(21)** comprising a first seat **(31)** for a slider element of said pair **(25)** of a first sheet of said pair **(50)** and a second opposite seat **(31)** for a slider element of said pair **(25)** of the second sheet of said pair **(50),** said first and second seat **(31)** being parallel and on opposite sides of said first section **(21).**

12. Covering system according to any one of the preceding claims, wherein each profile of said pair of profiles **(20)** comprises at least one first straight section **(21)** along a first and second axis **(X, X')** and at least one second curved section **(22, 23)** designed to be fixed with the base **(2),** said at least one first straight section **(21)** being designed to remain at said planar portion **(51)** and said at least one second curved section **(22, 23)** being designed to remain at said curved portion **(52)** when said at least one first glass sheet **(50)** is in closed position, the system further comprising a second shaped profile **(28)** with a pair of curved portions **(28')** and a straight portion **(29)** interposed between said curved portions **(28'),** upon coupling said at least one second shaped profile **(28)** with said pair of first profiles **(20),** said pair of curved portions **(28')** define said at least one second curved section **(22, 23).**

13. Covering system according to any one of claims 6 to the preceding, wherein during use said plane (π) is substantially parallel and spaced apart from the edge **(5)** of the base **(2).**

14. A horizontal refrigerated counter comprising a substantially parallelepiped shaped base **(2)** with an upper opening so as to define a vacant peripheral edge **(5),** and a covering **(10),** the latter being obtained with a system according to one or more of the preceding claims.

15. A method for providing a cover **(10)** which can be installed on a base **(2)** of a horizontal refrigerated counter, the base **(2)** comprising a peripheral edge **(5)** with at least one pair of opposite sections, the method comprising the steps of:

- providing a pair of longitudinal support profiles **(20)** having a first substantially straight section **(21)** defining a first and second axis **(X, X')** and a second curved section **(22),** each profile of said pair **(20)** comprising a longitudinal guide element **(30)** having extension along said first and second axis **(X, X');**
- coupling of said pair of longitudinal support profiles **(20)** with the peripheral edge **(5)** of the base **(2)** so that the support profiles of said pair **(20)** remain arranged facing and parallel to each other;
- providing at least one glass sheet **(50)** comprising at least one planar portion **(51)** and at least one curved portion **(52);**
- inserting said at least one planar portion **(51)** of said at least one glass sheet **(50)** between said pair of longitudinal profiles **(20)** so that said pair of guide elements **(30)** guides said at least one glass sheet **(50)** sliding along a direction **(d)** substantially parallel to said first and second axis **(X, X').**

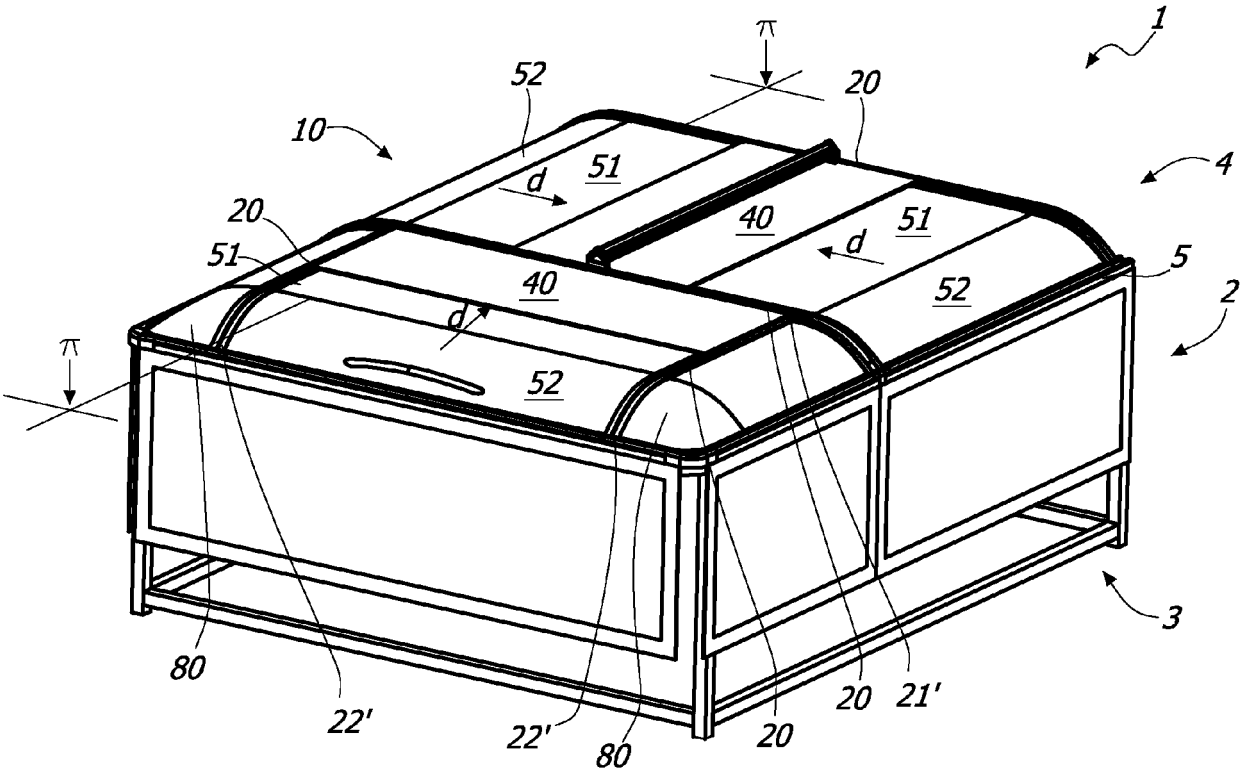
1
π
52
20
10
4
51
d
40
51
20
d
51
5
40
52
2
d
π
52
3
80
20
21'
22'
22'
80
20

FIG. 1

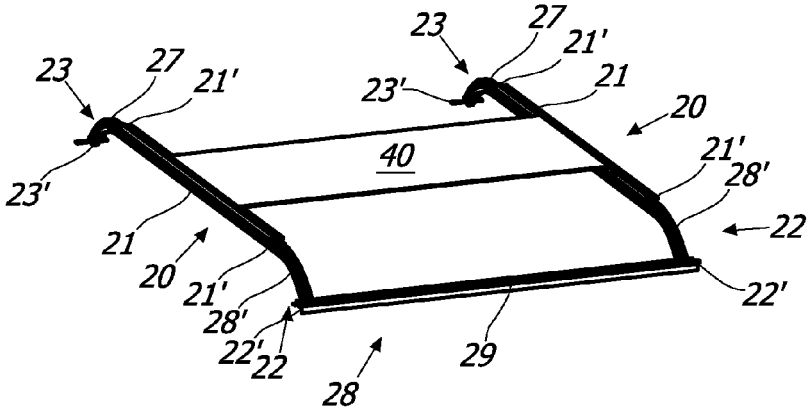
23
27
21'
23
27
21'
23'
21
20
40
21'
28'
23'
22
21
20
21'
22'
28'
22'
22
29
28

FIG. 2

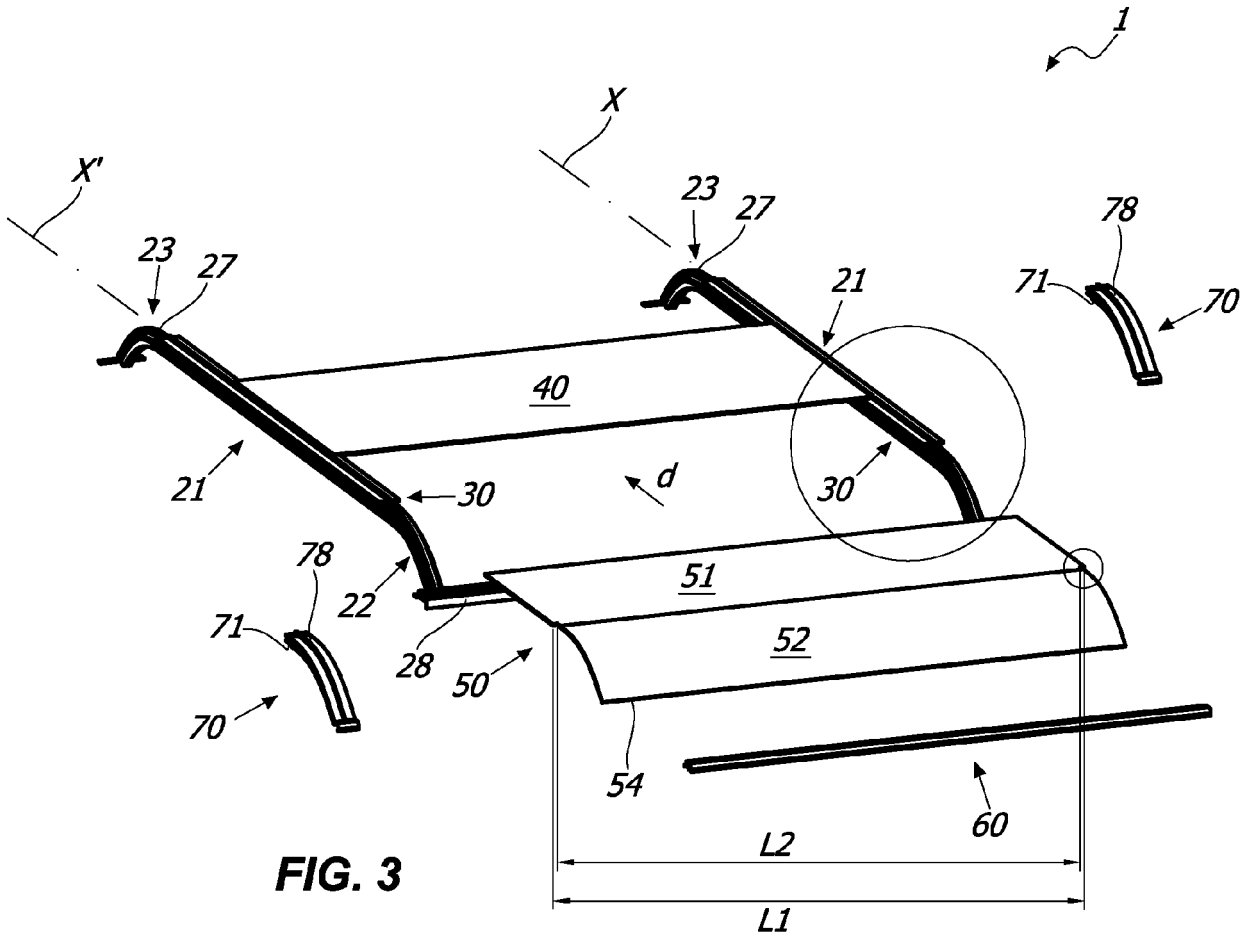
1
X
X'
23
27
23
27
78
71
70
21
21
40
30
d
30
78
71
70
22
28
50
51
52
54
60
L2
L1

FIG. 3

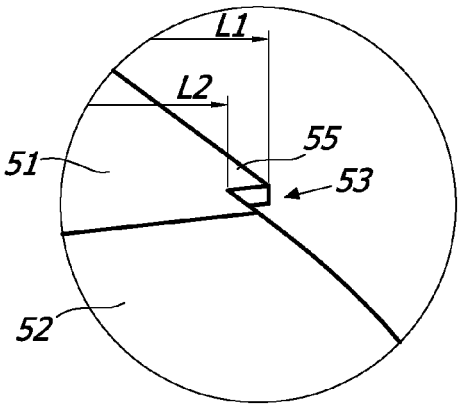
L1
L2
55
51
53
52

FIG. 4

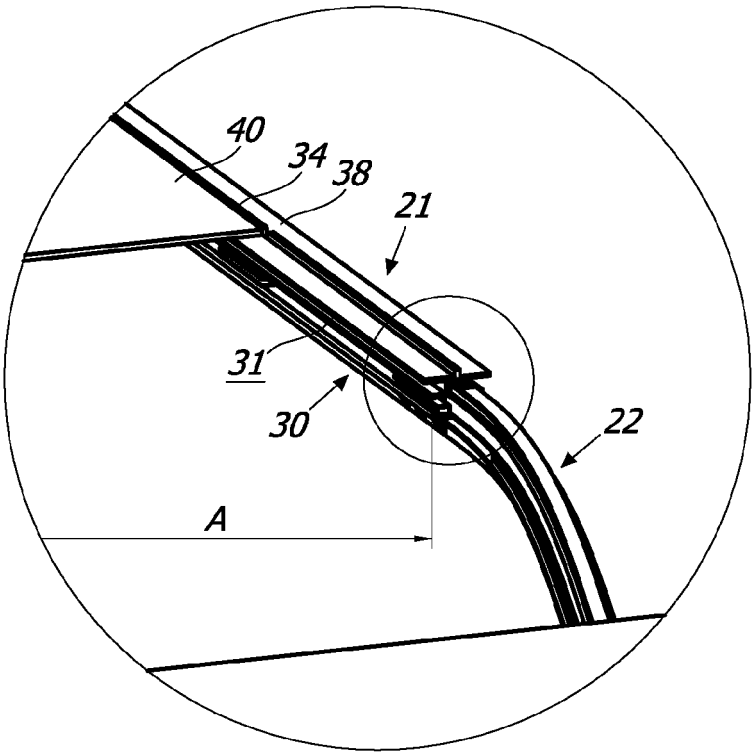
40
34
38
21
31
30
22
A

FIG. 5

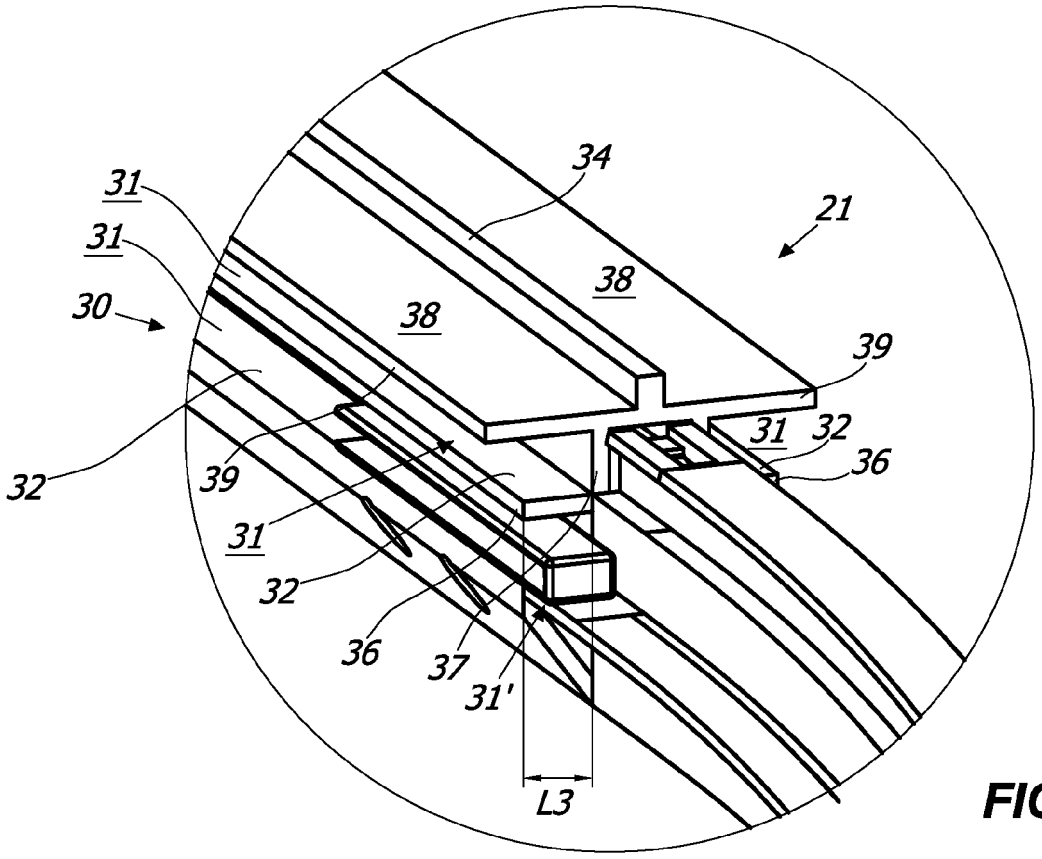
31
31
30
32
34
21
38
38
39
31
32
36
39
31
32
36
37
31'
L3

FIG. 6

Europäisches Patentamt
European Patent Office
Office européen des brevets

EUROPEAN SEARCH REPORT

Application Number
EP 24 15 9688

DOCUMENTS CONSIDERED TO BE RELEVANT

Category	Citation of document with indication, where appropriate, of relevant passages	Relevant to claim	CLASSIFICATION OF THE APPLICATION (IPC)
A	US 2017/226790 A1 (BRENNEIS JUERGEN [AT] ET AL) 10 August 2017 (2017-08-10) * figures 9,28 *	1-15	INV. F25D23/02
A	US 9 829 239 B2 (ANTHONY INC [US]) 28 November 2017 (2017-11-28) * figures *	1-15	
A	US 2021/298491 A1 (OLESEN SØREN [DK] ET AL) 30 September 2021 (2021-09-30) * figures *	1	
A	WO 2010/148537 A1 (CARRIER CORP [US]; GU ZHONG [CN]; WAN FENG [CN]) 29 December 2010 (2010-12-29) * figures *	1	
A	US 6 260 694 B1 (SASAHARA SHINTARO [JP]) 17 July 2001 (2001-07-17) * figures *	1	
A	US D 586 366 S1 (RESCH REINHOLD [AT]) 10 February 2009 (2009-02-10) * figures *	1	TECHNICAL FIELDS SEARCHED (IPC) F25D A47F E06B

The present search report has been drawn up for all claims

Place of search	Date of completion of the search	Examiner
The Hague	6 June 2024	Vigilante, Marco

CATEGORY OF CITED DOCUMENTS

X : particularly relevant if taken alone
Y : particularly relevant if combined with another document of the same category
A : technological background
O : non-written disclosure
P : intermediate document

T : theory or principle underlying the invention
E : earlier patent document, but published on, or after the filing date
D : document cited in the application
L : document cited for other reasons

& : member of the same patent family, corresponding document

EPO FORM 1503 03.82 (P04C01)

ANNEX TO THE EUROPEAN SEARCH REPORT ON EUROPEAN PATENT APPLICATION NO. EP 24 15 9688

This annex lists the patent family members relating to the patent documents cited in the above-mentioned European search report. The members are as contained in the European Patent Office EDP file on
The European Patent Office is in no way liable for these particulars which are merely given for the purpose of information.

06-06-2024

Patent document cited in search report	Publication date	Patent family member(s)	Publication date
US 2017226790 A1	10-08-2017	AU 2015303173 A1	09-03-2017
		BR 112017002728 A2	16-01-2018
		CN 106662389 A	10-05-2017
		EP 2984969 A1	17-02-2016
		JP 2017528198 A	28-09-2017
		US 2017226790 A1	10-08-2017
		WO 2016023969 A1	18-02-2016
US 9829239 B2	28-11-2017	US 2014109607 A1	24-04-2014
		US 2017138657 A1	18-05-2017
US 2021298491 A1	30-09-2021	BR 112021000287 A2	06-04-2021
		DK 201870483 A1	13-02-2020
		EP 3820333 A1	19-05-2021
		JP 7273074 B2	12-05-2023
		JP 2021524336 A	13-09-2021
		US 2021298491 A1	30-09-2021
		WO 2020011324 A1	16-01-2020
WO 2010148537 A1	29-12-2010	CN 102458192 A	16-05-2012
		EP 2445378 A1	02-05-2012
		WO 2010148537 A1	29-12-2010
US 6260694 B1	17-07-2001	CN 1217177 A	26-05-1999
		DE 19851225 A1	20-05-1999
		FR 2770984 A1	21-05-1999
		GB 2331498 A	26-05-1999
		JP 3687766 B2	24-08-2005
		JP H11151152 A	08-06-1999
		US 6260694 B1	17-07-2001
US D586366 S1	10-02-2009	NONE	

EPO FORM P0459

For more details about this annex : see Official Journal of the European Patent Office, No. 12/82