(No Model.)

2 Sheets—Sheet 1.

J. STEWART.

YARN CARRIER FOR KNITTING MACHINES.

No. 348,503. Patented Aug. 31, 1886.

Fig. 1.

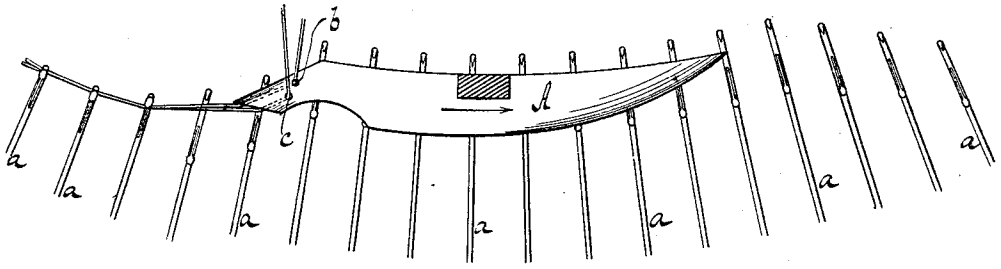

Fig. 2.

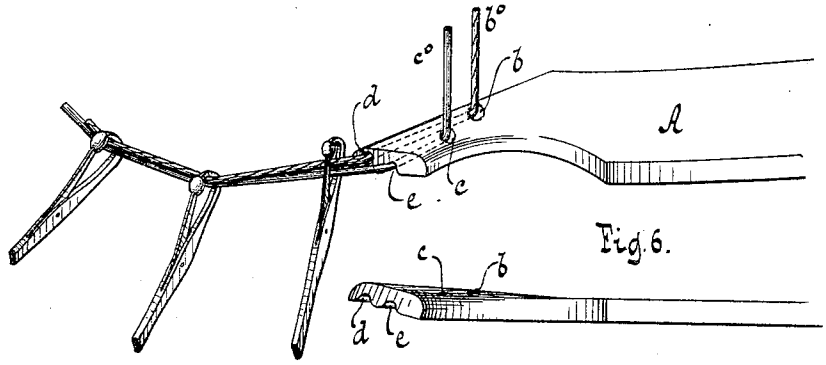

Fig. 6.

Fig. 3.

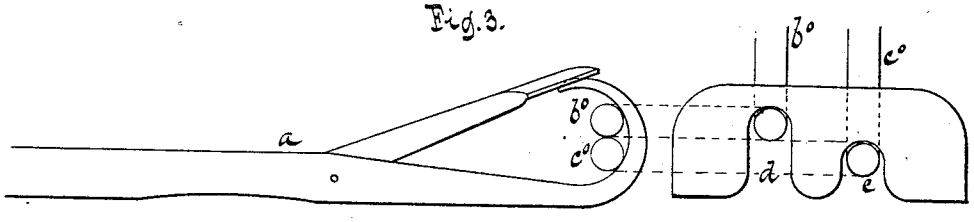

Fig. 4.

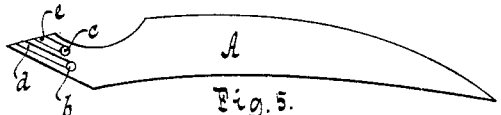

Fig. 7.



Fig. 5.

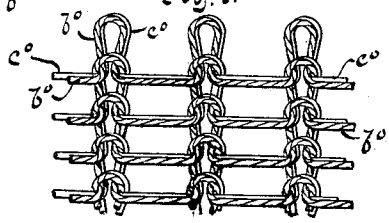

Witnesses
Otto Hupfeld
A. Faber du Faur Jr.

Inventor
Joseph Stewart
by
Van Santvoord & Hauff
his att'ys

N. PETERS, Photo-Lithographer, Washington, D. C.

(No Model.) 2 Sheets—Sheet 2.

J. STEWART.

YARN CARRIER FOR KNITTING MACHINES.

No. 348,503. Patented Aug. 31, 1886.

Fig. 8.

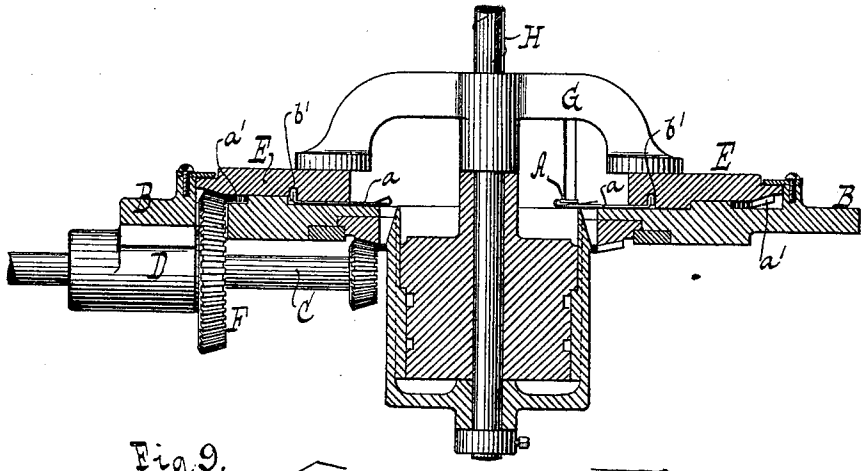

Fig. 9.

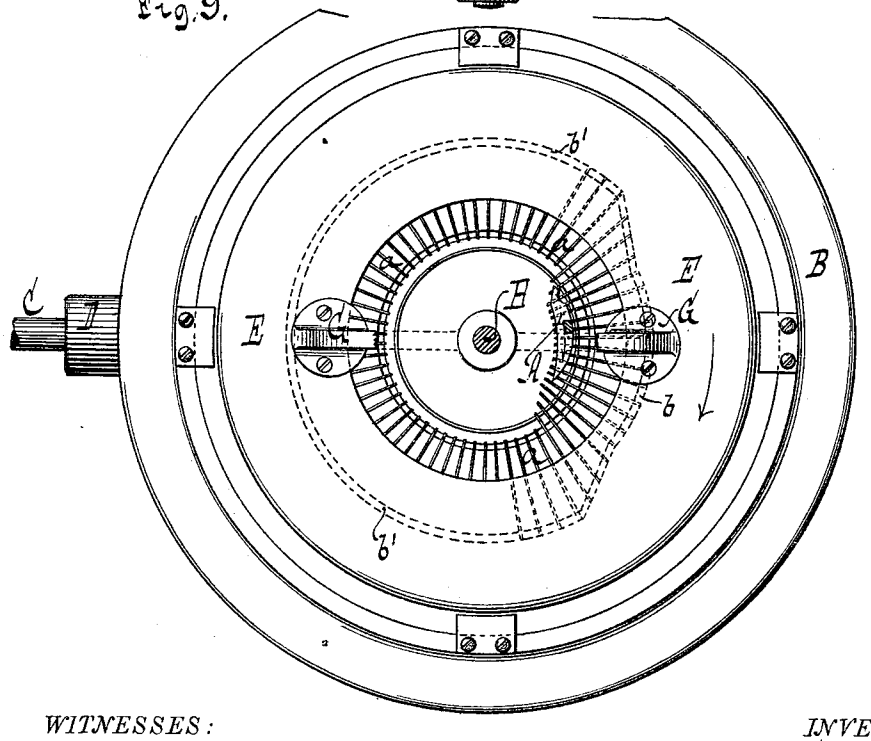

WITNESSES:

Otto Hufeland

William Miller

INVENTOR

Joseph Stewart

BY

Van Santvoord & Hauff

ATTORNEYS

N. PETERS, Photo-Lithographer, Washington, D. C.

UNITED STATES PATENT OFFICE.

JOSEPH STEWART, OF MOUNT VERNON, NEW YORK.

YARN-CARRIER FOR KNITTING-MACHINES.

SPECIFICATION forming part of Letters Patent No. 348,503, dated August 31, 1886.

Application filed October 29, 1885. Serial No. 181,301. (No model.)

To all whom it may concern:

Be it known that I, JOSEPH STEWART, a citizen of the United States, residing at Mount Vernon, in the county of Westchester and State of New York, have invented new and useful Improvements in Yarn-Carriers for Knitting-Machines, of which the following is a specification.

This invention relates to an improvement in yarn-carriers for knitting-machines; and it consists in a yarn-carrier provided with two guide-channels extending from the edge thereof and located side by side and at different levels, and a transverse opening or openings through the body of the carrier and leading into said guide-channels, as hereinafter set forth.

In the accompanying drawings, Figure 1 is a diagram showing a number of the plate-needles and the yarn-carrier of a circular-knitting machine. Fig. 2 is a perspective view, on a larger scale, of the yarn-carrier, showing also several of the needles and the method of depositing the yarn in the needles. Fig. 3 is a diagram showing an enlarged view of a knitting-machine needle, the end of the yarn-carrier, and the position of the yarn in each. Fig. 4 is an inverted plan or bottom view of the yarn-carrier detached. Fig. 5 shows a piece of web knitted by the plate-needles of a circular-knitting machine with the aid of my invention. Figs. 6 and 7 illustrate modifications in the yarn-carrier. Fig. 8 is a section of the upper portion of a circular-knitting machine. Fig. 9 is a sectional plan view of the same.

Similar letters indicate corresponding parts.

In the drawings, the letter A designates the yarn-carrier, and *a* the "plate" or horizontal needles of a circular-knitting machine. The yarn-carrier is caused to travel around near the inner ends of the needles in the usual manner, while the latter are subjected to the action of cams and other mechanism generally employed in machines of this class—for instance, such as the knitting-machine patented to G. A. Leighton, No. 272,560.

According to my invention, the yarn-carrier A is provided, as shown in the drawings, with two guide-channels extending from the edge thereof and situated aside of each other and at different levels, one of said channels consisting of a groove, *d*, having at the inner end thereof an opening or perforation, *b*, transversely through the body of the guide. The other channel consists of a groove, *c*, having an opening or perforation, *c*, at the end thereof. These grooves are cut into the under side of the yarn-carrier A, and are of unequal depth, the groove *d* extending farther up into the yarn-carrier than the groove *c*. The purpose of this construction of the yarn-carrier is to produce a web in which the yarn which is fed through the opening *b* will show only on one side of the web, while that which is fed through the opening *c* will show only on the other side of the web; or, in other words, if worsted is fed through opening *b* and cotton through opening *c*, the cotton yarn will be behind the worsted yarn in the web, and the one side will show worsted only, while the other will show cotton only. To produce this result it is necessary to separate positively the two strands of yarn as they pass through the yarn-carrier in such a way that they cannot be twisted and that they will be deposited in the needles always in the same relative position to each other. For instance, if it is desired to have the worsted show on the side of the fabric that is toward the center of the machine as it is being knit, the cotton b^o should always be deposited above the wool c^o in the needle. If this is uniformly done, the needles will cast off the stitches uniformly, and only worsted will show on that side of the fabric facing toward the center of the machine. The same result may be reached by making the grooves *d e* of equal depth and slightly bending the tail of the yarn-carrier A. (See Fig. 6.)

I prefer to make a separate guide-opening for each strand of yarn; but it is evident that my yarn-carrier would feed the yarn in the desired way if only one guide-opening were provided so long as the separate guide-grooves *d e* above described are retained. (See Fig. 7.) In both cases herein described and shown in the accompanying drawings the guide-channels are situated aside of each other and at different levels, and the two strands b^o c^o, after having passed through the machine, will form loops such as shown in Fig. 5, the strand b^o being on one and the strand c^o on the other side of the fabric. The above refers to a web made with the plate-needles only; but when both "cylinder" or vertical needles and plate or horizontal needles are used I employ two

of my yarn-carriers in the usual way and knit a web in which both surfaces show worsted only, while cotton is in the center.

Figs. 8 and 9 show the application of my yarn-carrier to a circular-knitting machine of that class in which the needles do not rotate and in which the yarn is delivered into the needles by a yarn-carrier which is carried around near the inner ends of the needles. In both these figures only the plate-needles and the carrier which delivers the yarn to these needles are shown; but it is obvious that an additional carrier may be employed, and that the cylinder-needles (left out in the drawings) may be inserted, as in the usual way of operating these machines. In these figures the letter B indicates a stationary plate, in which are guided the plate-needles *a*. On the bottom of this plate is mounted a shaft, C, journaled in the bearing D, and carrying the gear-wheel F, which serves to rotate the cam-plate E by engaging the teeth *a'* cut into the under surface of the said plate. Into this cam-plate is cut the cam-groove *b'*, which engages the tails of the plate-needles *a* and moves them in and out in the usual way, as shown in Fig. 9. To the upper surface of the cam-plate is secured a yoke, G, which carries at its center the spindle H, on which is mounted the mechanism for moving the cylinder-needles when these are used. This yoke also serves to carry the yarn-carrier A around near the inner ends of the plate-needles in such a manner as to cause the yarn to be deposited in the needles, as above described.

I am aware that it is customary to introduce two or more threads into a yarn-guide, and that it is not broadly new to form a yarn-guide with yarn-passages at different heights to conduct threads of different colors or materials to the needles, as herein. I desire to claim only the yarn-guide constructed as shown and described, with the grooves *d* and *e* extending from the edge thereof and located side by side at different levels, and the transverse opening or openings leading into said grooves.

What I claim as new, and desire to secure by Letters Patent, is—

A yarn-carrier for a knitting-machine, having two guide-channels extending from the edge thereof and located side by side and at different levels, for uniformly delivering two yarns, one above the other, into the same row of needles, and a transverse opening or openings through the body thereof leading into said guide-channels, substantially as described.

In testimony whereof I have hereunto set my hand and seal in the presence of two subscribing witnesses.

JOSEPH STEWART. [L. S.]

Witnesses:
HARLAN W. HOLTON,
FREDERICK BELLESHEIM.