(12) INTERNATIONAL APPLICATION PUBLISHED UNDER THE PATENT COOPERATION TREATY (PCT)

(19) World Intellectual Property Organization
International Bureau

(43) International Publication Date
01 February 2018 (01.02.2018)

WIPO | PCT

(10) International Publication Number
WO 2018/019678 A1

(51) International Patent Classification:
F02B 37/10 (2006.01) *F02B 37/02* (2006.01)

(21) International Application Number:
PCT/EP2017/068248

(22) International Filing Date:
19 July 2017 (19.07.2017)

(25) Filing Language: English

(26) Publication Language: English

(30) Priority Data:
1612798.7 25 July 2016 (25.07.2016) GB

(71) Applicant: **JAGUAR LAND ROVER LIMITED** [GB/GB]; Abbey Road, Whitley, Coventry Warwickshire CV3 4LF (GB).

(72) Inventor: **FOWLER, Gavin**; c/o Jaguar Land Rover, Patents Department W/1/073, Abbey Road, Whitley, Coventry Warwickshire CV3 4LF (GB).

(74) Agent: **BORTON, Claire**; c/o Jaguar Land Rover, Patents Department W/1/073, Abbey Road, Whitley, Coventry Warwickshire CV3 4LF (GB).

(81) Designated States *(unless otherwise indicated, for every kind of national protection available)*: AE, AG, AL, AM, AO, AT, AU, AZ, BA, BB, BG, BH, BN, BR, BW, BY, BZ, CA, CH, CL, CN, CO, CR, CU, CZ, DE, DJ, DK, DM, DO, DZ, EC, EE, EG, ES, FI, GB, GD, GE, GH, GM, GT, HN, HR, HU, ID, IL, IN, IR, IS, JO, JP, KE, KG, KH, KN, KP, KR, KW, KZ, LA, LC, LK, LR, LS, LU, LY, MA, MD, ME, MG, MK, MN, MW, MX, MY, MZ, NA, NG, NI, NO, NZ, OM, PA, PE, PG, PH, PL, PT, QA, RO, RS, RU, RW, SA, SC, SD, SE, SG, SK, SL, SM, ST, SV, SY, TH, TJ, TM, TN, TR, TT, TZ, UA, UG, US, UZ, VC, VN, ZA, ZM, ZW.

(84) Designated States *(unless otherwise indicated, for every kind of regional protection available)*: ARIPO (BW, GH, GM, KE, LR, LS, MW, MZ, NA, RW, SD, SL, ST, SZ, TZ, UG, ZM, ZW), Eurasian (AM, AZ, BY, KG, KZ, RU, TJ, TM), European (AL, AT, BE, BG, CH, CY, CZ, DE, DK, EE, ES, FI, FR, GB, GR, HR, HU, IE, IS, IT, LT, LU, LV, MC, MK, MT, NL, NO, PL, PT, RO, RS, SE, SI, SK, SM, TR), OAPI (BF, BJ, CF, CG, CI, CM, GA, GN, GQ, GW, KM, ML, MR, NE, SN, TD, TG).

Published:
— *with international search report (Art. 21(3))*
— *before the expiration of the time limit for amending the claims and to be republished in the event of receipt of amendments (Rule 48.2(h))*

(54) Title: DIRECT INJECTION OF GAS INTO A TURBINE VOLUTE

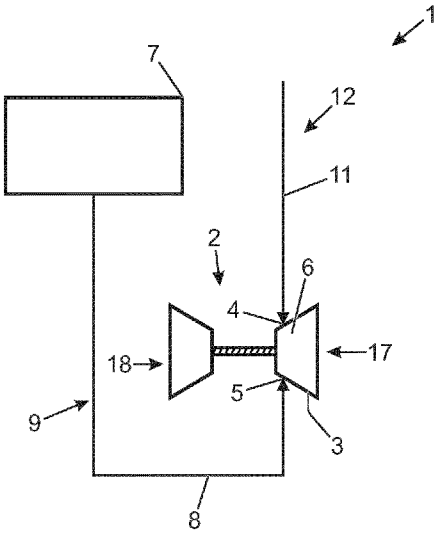

Fig. 1

(57) Abstract: A system (1), method (100) or turbine housing (3). The system comprising a turbocharger (2) and a storage means (7) for compressed gas, the turbocharger (2) comprising: a turbine housing (3) defining a turbine volute (6); at least one first turbine housing inlet (4) configured to provide a path (12) to the turbine volute (6) for gas (11) output from an engine (10); and at least one second turbine housing inlet (5) configured to provide a direct injection path (9) to the turbine volute (6) for gas (8) output from the storage means (7) for compressed gas.

WO 2018/019678 A1

DIRECT INJECTION OF GAS INTO A TURBINE VOLUTE

TECHNICAL FIELD

The present disclosure relates to a direct injection of gas into a turbine volute. In particular, but not exclusively it relates to a direct injection of gas into a turbine volute in a system comprising a turbocharger.

Aspects of the invention relate to a system, a method, a turbine housing for a turbocharger, and a vehicle.

BACKGROUND

Boosting systems, comprising turbocharged engines, display poor responsiveness to an increase in desired engine load in comparison to naturally aspirated engines. This is known as “turbo lag”. Turbo lag is a result of the time required to increase the rotational speed of a turbine wheel within a turbocharger. This time is effected by, among other things, the inertia of the turbine wheel. Turbo lag is therefore particularly apparent at low engine speeds when there is a low mass flow of exhaust gas onto the turbine wheel.

Various methods for reducing turbo lag are known in conventional boosting systems. These include changes to the turbocharger design, for example, by reducing the rotational inertia of the turbine wheel, reducing the bearing friction, and implementing variable-geometry turbochargers (VGTs). These changes to the turbocharger design still suffer a time lag following an increase in desired engine load until the mass flow of exhaust gas onto the turbine wheel is sufficient to provide the required turbocharger effect to meet the desired engine load.

Some methods for reducing turbo lag in conventional boosting systems focus on changing other aspects of the boosting system, for example, by releasing pressurised air into the engine intake manifold in response to an increase in desired engine load. These changes require a large amount of pressurised air to be stored and subsequently released in order to provide sufficient air to the engine intake manifold to maintain the increased engine load until the mass flow of exhaust gas onto the turbine wheel is sufficient to provide the required turbocharger effect to meet the desired engine load without the release of pressurised air.

It is an aim of the present invention to reduce turbo lag without the disadvantages of conventional boosting systems.

SUMMARY OF THE INVENTION

Aspects and embodiments of the invention provide a system, a vehicle, a method, and a turbine housing for a turbocharger as claimed in the appended claims.

According to an aspect of the invention there is provided a system comprising a turbocharger and a storage means for compressed gas, the turbocharger comprising: a turbine housing defining at least one turbine volute; at least one first turbine housing inlet configured to provide a path to at least one turbine volute for gas output from an engine; and at least one second turbine housing inlet configured to provide a direct injection path to at least one turbine volute for gas output from the storage means for compressed gas.

This provides the advantage that direct injection of gas output from the storage means for compressed gas increases the mass flow of gas in at least one turbine volute. As such, turbo lag, particularly at low engine speeds, is reduced.

In some, but not necessarily all, examples, the turbocharger comprises a plurality of second turbine housing inlets each configured to provide a different direct injection path to the at least one turbine volute for gas output from the storage means for compressed gas. A greater mass of air is therefore advantageously injected directly into the at least one turbine volute at one time.

In some, but not necessarily all, examples, a manifold is configured to provide a path from the storage means for compressed gas to at least some of the plurality of second turbine housing inlets.

In some, but not necessarily all, examples, the manifold is disposed outside the turbine housing. The manifold is therefore advantageously not subject to expansion or contraction that may otherwise have resulted from contact with the hot exhaust gas within the turbine housing.

In some, but not necessarily all, examples, the manifold is an integral part of the turbine housing.

In some, but not necessarily all, examples, the at least one second turbine housing inlet has a smaller diameter than the at least one first turbine housing inlet. This provides the advantage that a focused jet of high velocity gas may be provided into the at least one turbine volute.

In some, but not necessarily all, examples, the plurality of second turbine housing inlets are disposed through one or more of: an inner sidewall of the turbine housing; a roof of the turbine housing; and an outer sidewall of the turbine housing.

In some, but not necessarily all, examples, the second turbine housing inlets have one of: a first orientation, in a first plane, aligned with a radial line of a turbine wheel disposed within the turbine housing; or a second orientation, in a first plane, aligned with a tangent to a turbine wheel disposed within the turbine housing; or any orientation between said first orientation and said second orientation, wherein said first plane is orthogonal to an axis of rotation of the turbine wheel.

This provides the advantage that gas output from the storage means for compressed gas is directed towards the turbine blades of the turbine wheel and does not oppose the flow of gas output from the engine.

In some, but not necessarily all, examples, the plurality of second turbine housing inlets are configured to direct gas output from the storage means for compressed gas onto blades of a or the turbine wheel disposed within the turbine housing.

This provides the advantage that less gas is required to be output from the storage means for compressed gas in order to achieve a desired increase in rotational speed of the turbine wheel. Therefore, the storage capacity of the storage means for compressed gas can be reduced.

In some, but not necessarily all, examples, gas output from the storage means for compressed gas is at higher pressure than gas output from the engine. The gas output from

the storage means for compressed gas therefore advantageously enters the at least one turbine volute at a high velocity.

In some, but not necessarily all, examples, gas output from the storage means for compressed gas is configured to impart a higher rotational moment, about the axis of rotation of the turbine wheel, to the turbine wheel than gas output from the engine. This provides the advantage that the rotational speed of the turbine wheel can be rapidly increased by the gas output from the storage means for compressed gas.

In some, but not necessarily all, examples, the system comprises an engine.

In some, but not necessarily all, examples, the system comprises a controller; and a valve disposed in the direct injection path, wherein the controller is configured to control the valve to enable discharge of an amount of compressed gas from the storage means for compressed gas into at least one turbine volute, via the direct injection path and second turbine housing inlets, in response to detecting a change of desired engine load, wherein the amount of compressed gas is dependent on the change of desired engine load.

This provides the advantage that the rotational speed of the turbine wheel can be rapidly increased by the gas output from the storage means for compressed gas when there is an increase in desired engine load, thus reducing turbo lag.

In some, but not necessarily all, examples, a sensor is configured to determine a position of an accelerator pedal, wherein the controller is configured to receive a signal indicative of the position of the accelerator pedal from the sensor and to determine the desired change in engine load from a change in the position of the accelerator pedal.

According to another aspect of the invention there is provided a vehicle comprising the system as described herein.

According to a further aspect of the invention there is provided a method of controlling a turbocharger comprising at least one turbine volute configured to receive gas output from an engine, the method comprising: detecting a change in a desired engine load; in response to said detecting a change in the desired engine load, discharging an amount of compressed

gas from a storage means for compressed gas into a least one turbine volute via a direct injection path.

According to a further aspect of the invention there is provided a turbine housing for a turbocharger, said turbine housing comprising: at least one first turbine housing inlet configured to provide a path to at least one turbine volute defined by the turbine housing for gas output from an engine; and at least one second turbine housing inlet having a narrower diameter than said at least one first turbine housing inlet and configured to provide a path into at least one turbine volute for direct injected gas.

According to a further aspect of the invention there is provided a turbine housing for a turbocharger, said turbine housing comprising: at least one first turbine housing inlet configured to provide a path to at least one turbine volute defined by the turbine housing for gas output from an engine; and a plurality of second turbine housing inlets disposed at intervals around the turbine housing and configured to provide a path into at least one turbine volute for direct injected gas.

According to a further aspect of the invention there is provided a turbine housing for a turbocharger, said turbine housing comprising: at least one first turbine housing inlet configured to provide a path to at least one turbine volute defined by the turbine housing for gas output from an engine; and at least one second turbine housing inlet configured to provide a directed path into at least one turbine volute for direct injected gas, wherein said directed path is oriented towards a position configured to receive turbine blades of a turbine wheel disposed within the turbine housing.

According to a further aspect of the invention there is provided a turbine housing for a turbocharger, said turbine housing comprising: at least one first turbine housing inlet configured to provide a path to a least one turbine volute defined by the turbine housing for gas output from an engine; and at least one second turbine housing inlet configured to provide a path into at least one turbine volute for direct injected high pressure gas, wherein said high pressure gas enters at least one turbine volute at a higher velocity (momentum per unit area) than the gas output from an engine.

According to a further aspect of the invention there is provided a turbine housing for a turbocharger, said turbine housing comprising: at least one first turbine housing inlet

configured to provide a path to at least one turbine volute defined by the turbine housing for gas output from an engine; and a plurality of second turbine housing inlets, having a narrower diameter than said at least one first turbine housing inlet, disposed at intervals around the turbine housing and configured to provide a directed path into at least one turbine volute for direct injected high pressure gas, wherein said directed path is oriented towards a position configured to receive turbine blades of a turbine wheel disposed within the turbine housing, and wherein said high pressure gas enters at least one turbine volute at a higher velocity (momentum per unit area) than the gas output from an engine.

In some, but not necessarily all, examples, the at least one first turbine housing inlet and the at least one second turbine housing inlet are configured to provide a path to the same turbine volute.

In some, but not necessarily all, examples, the turbine housing defines only one turbine volute.

Alternatively, in some, but not necessarily all, examples, the turbine housing defines two or more turbine volutes and the at least one first turbine housing inlet is configured to provide a path to a first turbine volute and the at least one second turbine housing inlet is configured to provide a path into a second turbine volute.

In some, but not necessarily all, examples, the at least one first turbine housing inlet does not provide a direct path to the second turbine volute and the at least one second turbine housing inlet does not provide a direct path into the first turbine volute.

Within the scope of this application it is expressly intended that the various aspects, embodiments, examples and alternatives set out in the preceding paragraphs, in the claims and/or in the following description and drawings, and in particular the individual features thereof, may be taken independently or in any combination. That is, all embodiments and/or features of any embodiment can be combined in any way and/or combination, unless such features are incompatible. The applicant reserves the right to change any originally filed claim or file any new claim accordingly, including the right to amend any originally filed claim to depend from and/or incorporate any feature of any other claim although not originally claimed in that manner.

BRIEF DESCRIPTION OF THE DRAWINGS

One or more embodiments of the invention will now be described, by way of example only, with reference to the accompanying drawings, in which:

Figure 1 illustrates an example of a system.
Figure 2 illustrates an example of a system.
Figures 3A and 3B illustrates example of a turbine housing of a turbocharger.
Figure 4A, 4B, and 4C illustrates examples of a turbine housing of a turbocharger.
Figure 5 illustrates an example of a vehicle.
Figure 6 illustrates an example of a method.

DETAILED DESCRIPTION

Figure 1 illustrates a system 1 comprising a turbocharger 2 and a storage means 7 for compressed gas, the turbocharger 2 comprising: a turbine housing 3 defining a turbine volute 6; at least one first turbine housing inlet 4 configured to provide a path 12 to the turbine volute 6 for gas 11 output from an engine 10; and at least one second turbine housing inlet 5 configured to provide a direct injection path 9 to the turbine volute 6 for gas 8 output from the storage means 7 for compressed gas.

The direct injection path 9 from the storage means 7 for compressed gas to the turbine volute 6 is 'direct' in that it does not, at any point along its length, intersect with the path 12 from the engine 10 to the turbine volute 6, nor any other path from or to any engine.

In some examples the direct injection path 9, the path 12 from the engine 10 to the turbine volute 6, and a portion of the turbine volute 6 between the at least one first turbine housing inlet 4 and the at least one second turbine housing inlet 5, in combination, provide the only possible exhaust-side physical path between the engine 10 and the storage means 7 for compressed gas. It is to be appreciated that, in some examples (such as the example illustrated in figure 2), there is also an intake-side physical path between the intake manifold of the engine 10 and the input of the storage means 7 for compressed gas.

Figure 2 illustrates an example of the system 1 as illustrated in figure 1 further comprising an engine 10. In some examples the engine 10 is a diesel engine. Alternatively the engine may be a petrol engine.

The turbocharger 2 comprises a turbine 17 and a compressor 18. The turbine 17 comprises a turbine housing 3, which defines a turbine volute 6, and a turbine wheel 19 (illustrated in figures 3A and 3B) which is mechanically coupled to an impeller wheel (not shown) comprised in the compressor 18 by means of a shaft.

High pressure exhaust gas 11 output from an engine 10 enters the turbine volute 6 via a first turbine housing inlet 4. The exhaust gas 11 flows through the turbine volute 6 to a turbine housing outlet (not shown) following a pressure gradient. In so doing, the exhaust gas 11 imparts kinetic energy to the turbine wheel 19. This causes the turbine wheel 19 to rotate faster about its axis of rotation 21. Due to the mechanical coupling of the turbine wheel 19 and the impeller wheel of the compressor 18 via a shaft, the impeller wheel is caused to rotate faster within the compressor 18. Low pressure air intake 26 received by the compressor 18 flows axially on to the impeller wheel and is driven, by the impeller wheel, through a constriction in the compressor volute such that the air intake is compressed and delivered 27 to the intake manifold 28 of the engine 10 at a higher pressure than air upstream of the compressor 18. Therefore, a greater mass of air may enter an engine cylinder on each intake stroke and as such more power may be generated per engine cycle.

The direct injection path 9 described with reference to figure 1 enables the delivery of additional gas directly into turbine volute 6 which increases the mass flow of gas in the turbine volute 6. This produces a more rapid increase in the rotational speed of the impeller wheel comprised in the compressor 18 in comparison to conventional boosting systems because the inertia of the turbine wheel 19, comprised in the turbine 17 and mechanically coupled to the impeller wheel, can be overcome in a shorter time period. As such, turbo lag, particularly at low engine speeds, is reduced.

Though figure 2 only illustrates a single first turbine housing inlet 4, it is to be appreciated that more than one first turbine housing inlet 4 may be provided. For example, the turbocharger 2 may be a twin-scroll turbocharger which comprises two first turbine housing inlets 4, the first of which is configured to receive pulses from, for example, a first cylinder and a fourth cylinder of a four cylinder engine, and the second of which is configured to

receive pulses from, for example, a second cylinder and a third cylinder of said four cylinder engine.

The turbine 17 further comprises at least one second turbine housing inlet 5. Although in the example illustrated by figure 2 only one second turbine housing inlet 5 is shown, it is to be appreciated that a plurality of second turbine housing inlets 5 may be provided as illustrated in figures 3A and 3B.

As previously described with reference to figure 1, in the system 1 of figure 2, the at least one second turbine housing inlet 5 receives gas 8 output from the storage means 7 for compressed gas via the direct injection path 9.

When a plurality of second turbine housing inlets 5 are provided, each of the second turbine housing inlets 5 is configured to provide a different direct injection path 9 to the turbine volute 6 for gas 8 output from the storage means 7 for compressed gas. In some examples at least some of the different direct injection paths 9 comprise a common subsection of path.

A valve 14 is disposed in the direct injection path 9. In examples where a plurality of second turbine housing inlets 5 are provided and where the different direct injection paths 9 all comprise a common subsection of path, the valve 14 is disposed in the common subsection of path. In some examples a one way valve, for example a reed valve, in addition to the valve 14, is disposed in each of the plurality of second turbine housing inlets 5.

A controller 13 is configured to control the valve 14 to enable a discharge of an amount of compressed gas from the storage means 7 for compressed gas into the turbine volute 6 via the direct injection path 9 and the second turbine housing inlet 5 in response to detecting a change of desired engine load. The amount of compressed gas that is discharged is dependent upon the change of desired engine load. The valve 14 is opened and closed by an actuating means controlled by the controller 13. In some examples the valve 14 is a solenoid valve. In some examples, the controller 13 comprises a processor and memory.

Gas is stored in the storage means 7 for compressed gas at a higher pressure than the pressure of gas in the turbine volute 6. In some but not necessarily all examples, the pressure of gas stored in the storage means 7 for compressed gas is 12 bar and the pressure of gas in the turbine volute 6 is 2 bar. Therefore when the valve 14 is opened, a

pressure gradient is produced along the direct injection path 9 and the gas 8 output from the storage means 7 for compressed gas enters the turbine volute 6 at the at least one second turbine housing inlets 5 at a higher velocity than the exhaust gas 11 entering the turbine volute 6 at the first turbine housing inlet 4. This creates a significant impulsive force (change in momentum) over a small area.

The controller 13 is configured to control both the discharge time period for which the valve 14 is held open and the extent to which the valve 14 is held open.

For example, the valve 14 may be held fully open for a short discharge time period. In some examples a short discharge time period may be less than 0.1 seconds or may be between 0.1 and 0.2 seconds. This produces a pulse of gas which causes a rapid but small increase in the rotational speed of the turbine wheel 19.

Alternatively, the valve 14 may be held fully open for a long discharge time period causing a rapid and large increase in the speed of the turbine wheel 19. In some examples a long discharge time period may be more than 0.2 seconds. If the discharge time period for which the valve 14 is held open is sufficiently long, the storage means 7 for compressed gas may be substantially emptied, resulting in a decrease in the pressure gradient between the storage means 7 for compressed gas and the turbine volute 6 along the direct injection path 9.

In some examples a means for increasing the pressure of gas stored in an at least partially emptied storage means 7 for compressed gas is provided in order to maintain the pressure of the gas stored in the storage mean 7 for compressed gas during a discharge time period and therefore maintain the pressure gradient along the direct injection path 9. By maintaining the pressure gradient along the direct injection path 9 as opposed to allowing a decrease in the pressure gradient, gas 8 output from the storage means 7 for compressed gas continues to enter the turbine volute 6 at the same or substantially the same velocity for the duration of the discharge time period and therefore imparts the same amount of energy to the turbine wheel 19 in a shorter period of time resulting in a more rapid increase in rotational speed of the turbine wheel 19. The means for increasing pressure is, in some examples, a means for reducing the volume of the storage means 7 for compressed gas, for example a piston disposed within the storage means 7 for compressed gas.

Still alternatively the valve 14 may be held only partly open. This provides a lower energy pulse of gas than if the valve 14 had been held fully open for an equivalent time period. The rotational speed of the turbine wheel 19 therefore increases less rapidly and by a smaller amount. By holding the valve 14 only partly open the maximum discharge time period until the storage means 7 for compressed gas is emptied is increased. A longer, steadier increase in the rotational speed of the turbine wheel 19 is therefore achievable.

It is therefore seen that by controlling the valve 14 in the above manner, the controller 13 can control the rate of increase of rotational speed of the turbine wheel 19 and the time period over which the rotational speed of the turbine wheel 19 is increased.

The controller 13 is configured to receive a signal from a sensor 15 from which the controller 13 can determine the change in desired engine load. The controller 13 determines a relationship between the change in desired engine load and an amount of compressed gas to be discharged from the storage means 7 for compressed gas. This relationship may be determined by way of determining a required increase in the rotational speed of the turbine wheel 19 to achieve the change in the desired engine load and determining the amount of energy required to produce said required increase in rotational speed of the turbine wheel 19, where a relationship between the amount of compressed gas to be discharged and the kinetic energy said amount of compressed gas will impart to the turbine wheel 19 is known.

In some examples the relationship between the change in the desired engine load and an amount of compressed gas to be discharged from the storage means 7 for compressed gas is continuous. In some examples the relationship between the change in the desired engine load and an amount of compressed gas to be discharged from the storage means 7 for compressed gas is discrete, for example the change in the desired engine load is subdivided into a plurality of ranges, each range corresponding to a different predetermined amount of compressed gas to be discharged. In some examples, when it is determined that a there is a small change in the desired engine load a first small amount of compressed gas is discharged. When it is determined that a there is a medium change in the desired engine load a second medium amount of compressed gas is discharged. When it is determined that a there is a large change in the desired engine load a third large amount of compressed gas is discharged. It is to be appreciated that alternative subdivisions are possible.

In some but not necessarily all examples the controller 13 is configured to receive a signal indicative of the position of the accelerator pedal from the sensor 15 and to determine the change in the desired engine load from a change in the position of the accelerator pedal. Therefore the amount of compressed gas to be discharged is dependent on the amount of change in the position of the accelerator pedal. In some examples the opening of the valve 14 may be further controlled by the controller 13 responsive to the rate of change in the position of the accelerator pedal. The rate of increase of rotational speed of the turbine wheel 19 may be adjusted, by controlling the opening of the valve 14, in dependence on the rate of change in the position of the accelerator pedal. For example, it may be determined that a small rate of change in the position of the accelerator pedal indicates a desire by a driver for a gentle acceleration and therefore it is determined that the rate of increase of rotational speed of the turbine wheel 19 should be low and that a large rate of change in the position of the accelerator pedal indicates a desire by a driver for an aggressive acceleration and therefore it is determined that the rate of increase of rotational speed of the turbine wheel 19 should be high.

In the example illustrated by figure 2 the storage means 7 for compressed gas is a tank for compressed air, however in some examples the composition of compressed gas may additionally or alternatively comprise exhaust gas.

The storage means 7 for compressed gas is filled by air diverted from the air intake upstream of the compressor 18. Additionally or alternatively exhaust gas downstream of the turbine 17 may be diverted into the storage means 7 for compressed gas. In some examples the storage means 7 for compressed gas has a volume of approximately 2 litres.

A further compressor 16 is used to compress the air so that the air stored in the storage means 7 for compressed gas is pressurised to, for example, 12 bar. The further compressor 16 is, in some examples, an electrically driven piston disposed within the storage means 7 for compressed gas. It is to be appreciated that the piston may be disposed in a separate tank in which the air is compressed before is it is delivered to the storage means 7 for compressed gas or that the further compressor 16 may be any other means suitable for compressing the air to a pressure exceeding the pressure of gas in the turbine volute 6, for example to a pressure exceeding 2 bar. In some examples the power of the further compressor 16 is limited to 400W.

In some examples the further compressor 16 may be comprised in a secondary turbocharger, where the turbine of the secondary turbocharger, which drives the further compressor 16, is disposed downstream of the turbine 17.

In some examples at least some of the output from the turbine of the secondary turbocharger may be directed through the further compressor 16 to supplement air diverted from the air intake 26 when filling the storage means 7 for compressed gas. This results in a mix of air and exhaust gas being stored in the storage means 7 for compressed gas. As a result, less air is diverted from the air intake 26 in order to fill the storage means 7 for compressed gas. Additionally less air is diverted from the air intake 26 per unit time or alternatively the time to fill the storage means 7 for compressed gas is reduced.

In some examples, the storage means 7 for compressed gas is filled by air diverted from the air downstream of the compressor 18. This reduces the power required by the further compressor 16 because the air has been already been pressurised by the compressor 18. In some example the need for the further compressor 16 is eliminated because the air has already been pressurised to a pressure exceeding the pressure of gas in the turbine volute 6 by the compressor 18.

In some examples exhaust gas 11 upstream of the turbine 17 may be diverted into the storage means 7 for compressed gas by means of controlling a valve, using the controller 13 or another controller, to open when a decrease in desired engine load is detected. Since the desired engine load is decreasing, it is not necessary to maintain the same mass of air entering an engine cylinder on each intake stroke. The rotational speed of the impeller wheel of the compressor 18 can therefore decrease and therefore less exhaust gas 11 is required to pass through the turbine volute 6 and an amount of exhaust gas 11 may therefore be diverted into the storage means 7 for compressed gas.

Figures 3A and 3B illustrate, by way of a cross-section, an example of the turbine 17 viewed in a first plane orthogonal to the axis of rotation 21 of the turbine wheel 19. The turbine volute 6, as defined by the turbine housing 3, conforms to the circumference of the turbine wheel 19. The turbine volute 6 provides a spiral path of decreasing cross-sectional area along the circumference in the direction of gas flow in the turbine volute 6 (which in the example shown in figures 3A and 3B is anticlockwise, though it is to be appreciated that this is merely illustrative and the gas flow may be in a clockwise direction). The spiral path

provided by the turbine volute 6 ensures that the velocity of gas in the turbine volute 6 does not substantially decrease with displacement from the at least one first turbine housing inlet 4.

The turbine housing 3 comprises a plurality of second turbine housing inlets 5 each providing a directed path into the turbine volute 6 for direct injected high pressure gas, for example the gas 8 output from the storage means 7 for compressed gas. The plurality of second turbine housing inlets 5 are disposed at intervals around the turbine housing 3. The intervals are defined by the angular displacement between neighbouring second turbine housing inlets of the plurality of second turbine housing inlets 5.

In some examples the plurality of second turbine housing inlets 5 are disposed at constant intervals around the turbine housing 3. The angular displacement between each of the plurality of second turbine housing inlets 5 is given by 2π divided by the number of second turbine housing inlets 5. Alternatively the angular displacement between each of the plurality of second turbine housing inlets 5 is given by θ divided by the number of second turbine housing inlets 5, where θ is an angle less than 2π radians in order to account for the angular extent of the at least one first turbine housing inlet 4.

In some examples the plurality of second turbine housing inlets 5 are disposed at varying intervals around the turbine housing 3. As the second turbine housing inlets 5 are disposed closer to the turbine wheel 19 because of the decrease in the cross-sectional area of the turbine volute 6, the angular displacement between neighbouring second turbine housing inlets 5 increases. This results in a more even distribution of force around the turbine wheel 19 (and therefore improved noise, vibration, and harshness (NVH) performance) because the direct injected high pressure gas entering the turbine volute 6 via a second turbine housing inlet 5 impacts the turbine blades 20 of the turbine wheel 19 with greater velocity the closer the second turbine housing inlet 5 is disposed to the turbine wheel 19.

In the example shown in figures 3A and 3B, but not necessarily all examples, a second turbine housing inlet has a narrower diameter than the at least one first turbine housing inlet 4. Each of the plurality of second turbine housing inlets 5 has a narrower diameter than the at least one first turbine housing inlet 4. In some examples each of the plurality of second turbine housing inlets 5 has the same diameter. In other examples the diameters of at least some of the plurality of second turbine housing inlets 5 are different. In some examples,

where the lengths of the different direct injection paths 9 are different and longer direct injection paths 9 offer greater resistance to the flow of gas 8 output from the storage means 7 for compressed gas, the second turbine housing inlets 5 that provide a longer direct injection path 9 have larger diameters which offer lower resistance to the flow of gas 8 output from the storage means 7 for compressed gas. Alternatively or additionally second turbine housing inlets 5 disposed closer to the turbine wheel 19 have, in some examples, greater diameters to reduce the velocity at which gas 8 output from the storage means 7 for compressed gas, passing through the second turbine housing inlets 5, enters the turbine volute 6.

Figure 3A illustrates an example in which the second turbine housing inlets 5 have a first orientation, in the first plane, each first orientation aligned with a different radial line of the turbine wheel 19 disposed within the turbine housing 3. Figure 3B illustrates an example in which the second turbine housing inlets 5 have a second orientation, in the first plane, each second orientation aligned with a different tangent to the turbine wheel 19 disposed within the turbine housing 3. In some examples, the second turbine housing inlets 5 have any orientation between said first orientation and said second orientation. The first orientation and the second orientation define the limits of a range of orientations in which the direct injected high pressure gas, entering the turbine volute 6 via the second turbine housing inlets 5, is directed onto the turbine blades 20 of the turbine wheel 19 and does not oppose the flow of gas entering the turbine volute 6 via the at least one first turbine housing inlet 4, for example the gas 11 output from the engine 10. The direct injected high pressure gas enters the turbine volute 6 as a high velocity jet and impacts on the turbine blades 20 of the turbine wheel 19 thereby imparting a higher rotational moment, about the axis of rotation 21 of the turbine wheel 19, to the turbine wheel 19 than the gas 11 output from the engine 10. This causes a rapid increase in the rotational speed of the turbine wheel 19 in comparison to conventional boosting systems and therefore reduces turbo lag. In some examples the direct injected high pressure gas enters the turbine volute 6 at a higher velocity than the gas 11 output from the engine 10.

In some examples the plurality of second turbine housing inlets 5 may be oriented such that direct injected high pressure gas, entering the turbine volute 6 via the second turbine housing inlets 5, is not directed onto the turbine blades 20 of the turbine wheel 19 but does not oppose the flow of gas entering the turbine volute 6 via the at least one first turbine housing inlet 4. In this way, the direct injected high pressure gas still increases the mass flow

of the gas in the turbine volute 6 and therefore reduces turbo lag in comparison to conventional boosting systems.

It is to be appreciated that at least some of the plurality of second turbine housing inlets 5 may have different orientations in the first plane.

Figures 4A, 4B, and 4C illustrate, by way of a cross-section, an example of the turbine 17 viewed in a second plane which is orthogonal to the first plane and which comprises the axis of rotation 21 of the turbine wheel 19. The cross-section is substantially similar about the axis of rotation 21 of the turbine wheel 19, therefore for the purpose of illustration only half the cross-section is depicted in figures 4A, 4B, and 4C.

A manifold 22 provides a plurality of direct injection paths 9 to the turbine volute 6 for gas 8 output from the storage means 7 for compressed gas. The manifold 22 receives gas 8 output from the storage means 7 for compressed gas via a single path from the storage means 7 for compressed gas. In this way, the different direct injection paths 9 comprise a common subsection of path. In some examples the manifold 22 is disposed outside the turbine housing 3 and is therefore not subject to expansion or contraction that may otherwise have resulted from contact with the hot exhaust gas 11 that enters the turbine volute 6 via the at least one first turbine housing inlet 4. In some examples the manifold 22 is an integral part of the turbine housing 3.

The manifold 22, in some examples, circumscribes the turbine housing 3. In other examples the manifold 22 only partially circumscribes the turbine housing 3. For example, the manifold 22 is disposed around an arc of angle θ of the circumference of the turbine housing 3, where θ is an angle less than 2π in order to account for the angular extent of the at least one first turbine housing inlet 4.

Figure 4A shows an example of the turbine housing 3 in which the at least one second turbine housing inlet 5 is disposed through an inner sidewall 23 of the turbine housing 3. Figure 4B shows an example of the turbine housing 3 in which the at least one second turbine housing inlet 5 is disposed through a roof 24 of the turbine housing 3. Figure 4C shows an example of the turbine housing 3 in which the at least one second turbine housing inlet 5 is disposed through an outer sidewall 25 of the turbine housing 3.

The roof 24 is the portion of the turbine housing 3 where an inner surface 29 of the turbine housing 3 bordering the turbine volute 6 is substantially parallel to the axis of rotation 21 of the turbine wheel 19. The inner sidewall 23 and the outer sidewall 25 are the portion of the turbine housing 3 attached to the roof 24 and, at least in part, substantially opposing each other.

In some examples where a plurality of second turbine housing inlets 5 are provided, the second turbine housing inlets 5 are disposed through more than one of the inner sidewall 23, the roof 24, and the outer sidewall 25. In some examples a plurality of second turbine housing inlets 5 are disposed at a single angular position around the axis of rotation 21 of the turbine wheel 19. For example, at a single angular position one second turbine housing inlet 5 is disposed through the inner sidewall 23, one second turbine housing inlet 5 is disposed through the roof 24, and one second turbine housing inlet 5 is disposed through the outer sidewall 25.

In some but not necessarily all examples, where a plurality of second turbine housing inlets 5 are disposed at a single angular position around the axis of rotation 21 of the turbine wheel 19, a plurality of manifolds 22 are provided. For example, a first manifold 22 provides a plurality of direct injection paths 9 to a plurality of second turbine housing inlets 5 disposed through the inner sidewall 23, a second manifold 22 provides a plurality of direct injection paths 9 to a plurality of second turbine housing inlets 5 disposed through the roof 24, and a third manifold 22 provides a plurality of direct injection paths 9 to a plurality of second turbine housing inlets 5 disposed through the outer sidewall 25. In other examples a single manifold 22 provides the plurality of injection paths 9 to all second turbine housing inlets 5.

In the example illustrated by figures 4A, 4B, and 4C, but not necessarily all examples, the at least one second turbine housing inlet 5 is oriented, in the second plane, towards the turbine blades 20 of the turbine wheel 19 such that gas entering the turbine volute 6 via the at least one second turbine housing inlets 5, for example gas 8 output from the storage means 7 for compressed gas, is directed onto the turbine blades 20 of the turbine wheel 19.

Figure 5 illustrates an example of a vehicle 30 comprising the system 1 as hereinbefore described with references to figures 1, 2, 3A, 3B, 4A, 4B, and 4C.

Figure 6 illustrates an example of a method 100 of controlling the turbocharger 2 comprising the turbine volute 6 configured to receive the gas 11 output from the engine 10, the method 100 comprising detecting, at block 101, a change in a desired engine load and, in response to said detecting a change in the desired engine load, discharging, at block 102, an amount of compressed gas from the storage means 7 for compressed gas into the turbine volute 6 via the direct injection path 9.

For purposes of this disclosure, it is to be understood that the controller(s) described herein can each comprise a control unit or computational device having one or more electronic processors. A vehicle and/or a system thereof may comprise a single control unit or electronic controller or alternatively different functions of the controller(s) may be embodied in, or hosted in, different control units or controllers. A set of instructions could be provided which, when executed, cause said controller(s) or control unit(s) to implement the control techniques described herein (including the described method(s)). The set of instructions may be embedded in one or more electronic processors, or alternatively, the set of instructions could be provided as software to be executed by one or more electronic processor(s). For example, a first controller may be implemented in software run on one or more electronic processors, and one or more other controllers may also be implemented in software run on or more electronic processors, optionally the same one or more processors as the first controller. It will be appreciated, however, that other arrangements are also useful, and therefore, the present disclosure is not intended to be limited to any particular arrangement. In any event, the set of instructions described above may be embedded in a computer-readable storage medium (e.g., a non-transitory storage medium) that may comprise any mechanism for storing information in a form readable by a machine or electronic processors/computational device, including, without limitation: a magnetic storage medium (e.g., floppy diskette); optical storage medium (e.g., CD-ROM); magneto optical storage medium; read only memory (ROM); random access memory (RAM); erasable programmable memory (e.g., EPROM ad EEPROM); flash memory; or electrical or other types of medium for storing such information/instructions.

The blocks illustrated in figure 6 may represent steps in a method and/or sections of code in a computer program. The illustration of a particular order to the blocks does not necessarily imply that there is a required or preferred order for the blocks and the order and arrangement of the block may be varied. Furthermore, it may be possible for some steps to be omitted.

Although embodiments of the present invention have been described in the preceding paragraphs with reference to various examples, it should be appreciated that modifications to the examples given can be made without departing from the scope of the invention as claimed. For example, it is to be appreciated that the features hereinbefore described can be applied to a variable-geometry turbocharger (VGT).

Features described in the preceding description may be used in combinations other than the combinations explicitly described.

Although functions have been described with reference to certain features, those functions may be performable by other features whether described or not.

Although features have been described with reference to certain embodiments, those features may also be present in other embodiments whether described or not.

Although examples of the present invention have been described in the preceding paragraphs with reference to a single turbine volute 6, it is to be appreciated that in some but not necessarily all examples, the turbine housing 3 may define two or more turbine volutes 6 such as may be found in a twin scroll turbocharger. An example is illustrated in Figure 7.

In some examples the at least one first turbine housing inlet 4 is configured to provide a path 12 to a first turbine volute 6A (e.g., a first scroll of a twin scroll turbocharger). The first turbine volute 6A is dedicated to receiving exhaust gas 11 output from the engine 10. The at least one second turbine housing inlet 5 is configured to provide a path into a second turbine volute 6B (e.g., a second scroll of a twin scroll turbocharger). The second turbine volute 6B is dedicated to receiving compressed gas 8 output from the storage means 7 for compressed gas. In some examples the at least one first turbine housing inlet 4 does not provide a direct path to the second turbine volute 6B and the at least one second turbine housing inlet 5 does not provide a direct path into the first turbine volute 6A.

Where the term ‘configured’ is used in the description or claims in respect of some examples, the term ‘arranged’ may be used for at least some of those examples. In at least some examples, these terms imply that an outcome is achieved by design.

Whilst endeavoring in the foregoing specification to draw attention to those features of the invention believed to be of particular importance it should be understood that the Applicant claims protection in respect of any patentable feature or combination of features hereinbefore referred to and/or shown in the drawings whether or not particular emphasis has been placed thereon.

CLAIMS

1. A system comprising a turbocharger and a storage means for compressed gas, the turbocharger comprising:
a turbine housing defining at least one turbine volute;
at least one first turbine housing inlet configured to provide a path to at least one turbine volute for gas output from an engine; and
at least one second turbine housing inlet configured to provide a direct injection path to at least one turbine volute for gas output from the storage means for compressed gas.

2. A system as claimed in any preceding claim, wherein the turbocharger comprises a plurality of second turbine housing inlets each configured to provide a different direct injection path to the at least one turbine volute for gas output from the storage means for compressed gas.

3. A system as claimed in claim 2, wherein a manifold is configured to provide a path from the storage means for compressed gas to at least some of the plurality of second turbine housing inlets.

4. A system as claimed in claim 3, wherein the manifold is disposed outside the turbine housing.

5. A system as claimed in claim 3 or 4, wherein the manifold is an integral part of the turbine housing.

6. A system as claimed in any preceding claim, wherein the at least one second turbine housing inlet has a smaller diameter than the at least one first turbine housing inlet.

7. A system as claimed in any of claims 2-6, wherein the plurality of second turbine housing inlets are disposed through one or more of:
an inner sidewall of the turbine housing;
a roof of the turbine housing; and
an outer sidewall of the turbine housing.

8. A system as claimed in claim 7, wherein the plurality of second turbine housing inlets are oriented, in a second plane, towards blades of a or the turbine wheel disposed within the turbine housing, wherein the second plane comprises the axis of rotation of the turbine wheel.

9. A system as claimed in any of claims 2-8, wherein the second turbine housing inlets have one of:
a first orientation, in a first plane, aligned with a radial line of a turbine wheel disposed within the turbine housing ; or
a second orientation, in a first plane, aligned with a tangent to a turbine wheel disposed within the turbine housing; or
any orientation between said first orientation and said second orientation,
wherein said first plane is orthogonal to an axis of rotation of the turbine wheel.

10. A system as claimed in any of claims 2-9, wherein the plurality of second turbine housing inlets are configured to direct gas output from the storage means for compressed gas onto blades of a or the turbine wheel disposed within the turbine housing.

11. A system as claimed in claim 10, wherein gas output from the storage means for compressed gas is at higher pressure than gas output from the engine.

12. A system as claimed in claim 10 or 11, wherein gas output from the storage means for compressed gas is configured to impart a higher rotational moment, about the axis of rotation of the turbine wheel, to the turbine wheel than gas output from the engine.

13. A system as claimed in claim 12, comprising an engine.

14. A system as claimed in claim 13, comprising:
a controller; and
a valve disposed in the direct injection path,
wherein the controller is configured to control the valve to enable discharge of an amount of compressed gas from the storage means for compressed gas into the at

least one turbine volute, via the direct injection path and second turbine housing inlets, in dependence on detecting a change of desired engine load,
wherein the amount of compressed gas is dependent on the change of desired engine load.

15. A system as claimed in claim 14, comprising a sensor configured to determine a position of an accelerator pedal, wherein the controller is configured to receive a signal indicative of the position of the accelerator pedal from the sensor and to determine the desired change in engine load from a change in the position of the accelerator pedal.

16. A vehicle comprising the system as claimed in any preceding claim.

17. A method of controlling a turbocharger comprising at least one turbine volute configured to receive gas output from an engine, the method comprising:
detecting a change in a desired engine load;
in dependence on said detecting a change in the desired engine load, discharging an amount of compressed gas from a storage means for compressed gas into the at least one turbine volute via a direct injection path.

18. A turbine housing for a turbocharger, said turbine housing comprising:
at least one first turbine housing inlet configured to provide a path to at least one turbine volute defined by the turbine housing for gas output from an engine; and
at least one second turbine housing inlet having a narrower diameter than said at least one first turbine housing inlet and configured to provide a path into at least one turbine volute for direct injected gas.

19. A turbine housing for a turbocharger, said turbine housing comprising:
at least one first turbine housing inlet configured to provide a path to at least one turbine volute defined by the turbine housing for gas output from an engine; and
a plurality of second turbine housing inlets disposed at intervals around the turbine housing and each configured to provide a path into at least one turbine volute for direct injected gas.

20. A turbine housing for a turbocharger, said turbine housing comprising:

at least one first turbine housing inlet configured to provide a path to at least one turbine volute defined by the turbine housing for gas output from an engine; and at least one second turbine housing inlet configured to provide a directed path into at least one turbine volute for direct injected gas, wherein said directed path is oriented towards a position configured to receive turbine blades of a turbine wheel disposed within the turbine housing.

21. A turbine housing for a turbocharger, said turbine housing comprising: at least one first turbine housing inlet configured to provide a path to at least one turbine volute defined by the turbine housing for gas output from an engine; and at least one second turbine housing inlet configured to provide a path into at least one turbine volute for direct injected high pressure gas, wherein said high pressure gas enters the at least one turbine volute at a higher velocity than the gas output from an engine.

22. A turbine housing for a turbocharger, said turbine housing comprising: at least one first turbine housing inlet configured to provide a path to at least one turbine volute defined by the turbine housing for gas output from an engine; and a plurality of second turbine housing inlets, having a narrower diameter than said at least one first turbine housing inlet, disposed at intervals around the turbine housing and each configured to provide a directed path into at least one turbine volute for direct injected high pressure gas, wherein said directed path is oriented towards a position configured to receive turbine blades of a turbine wheel disposed within the turbine housing, and wherein said high pressure gas enters the at least one turbine volute at a higher velocity than the gas output from an engine.

23. A system as claimed in any of claims 1-15 or a turbine housing as claimed in any of claims 18-22, wherein the at least one first turbine housing inlet and the at least one second turbine housing inlet are configured to provide a path to the same turbine volute.

24. A system as claimed in any of claims 1-15 or a turbine housing as claimed in any of claims 18-22, wherein the turbine housing defines only one turbine volute.

25. A system as claimed in any of claims 1-15 or a turbine housing as claimed in any of claims 18-22, wherein the turbine housing defines two or more turbine volutes and the at least one first turbine housing inlet is configured to provide a path to a first turbine volute and the at least one second turbine housing inlet is configured to provide a path into a second turbine volute.

26. A system as claimed in any of claims 1-15 or a turbine housing as claimed in any of claims 18-22, wherein the at least one first turbine housing inlet does not provide a direct path to the second turbine volute and the at least one second turbine housing inlet does not provide a direct path into the first turbine volute.

27. A turbine housing substantially as herein before described with reference to the accompanying drawings and/or as illustrated in the accompanying drawings.

28. A turbocharger system substantially as herein before described with reference to the accompanying drawings and/or as illustrated in the accompanying drawings.

29. A method substantially as herein before described with reference to the accompanying drawings and/or as illustrated in the accompanying drawings.

30. A vehicle substantially as herein before described with reference to the accompanying drawings and/or as illustrated in the accompanying drawings.

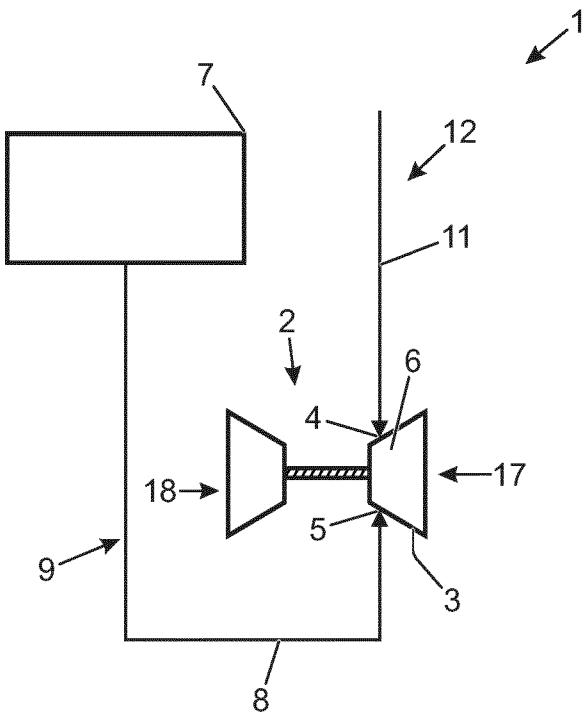

Fig. 1

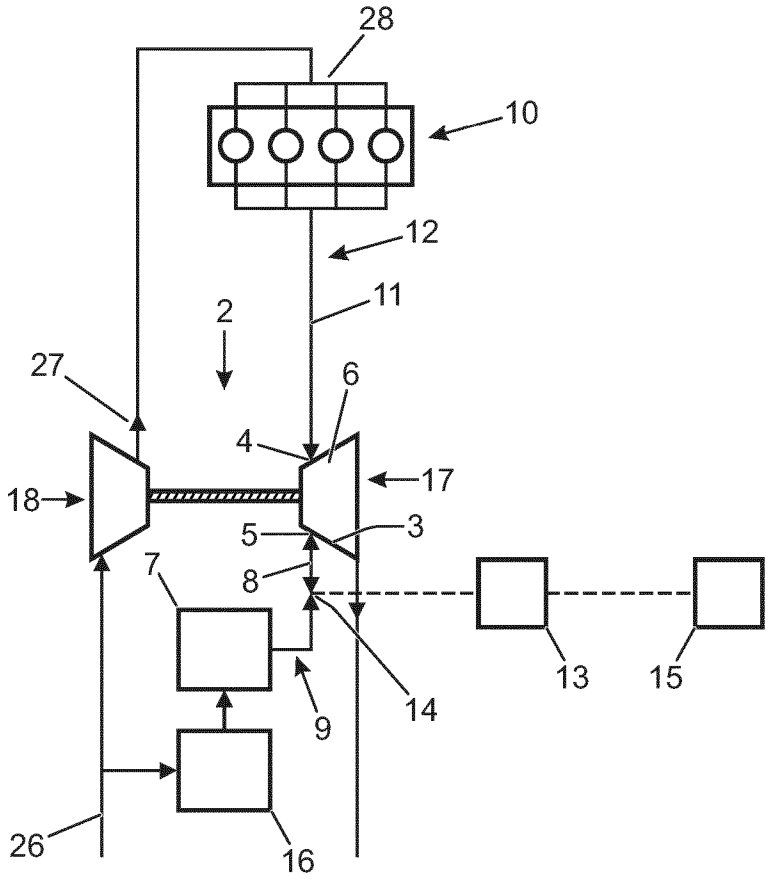

Fig. 2

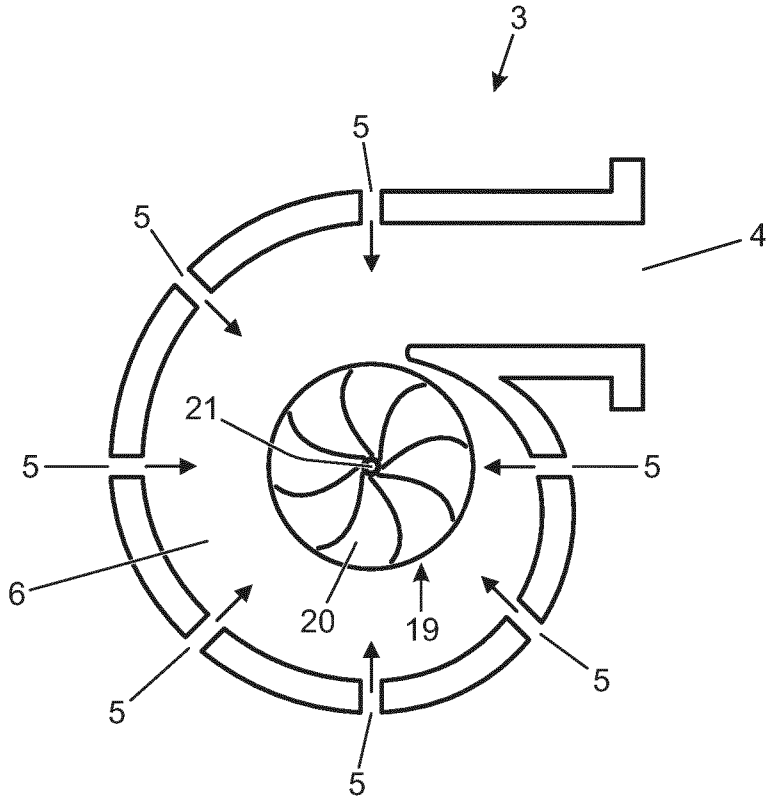

Fig. 3A

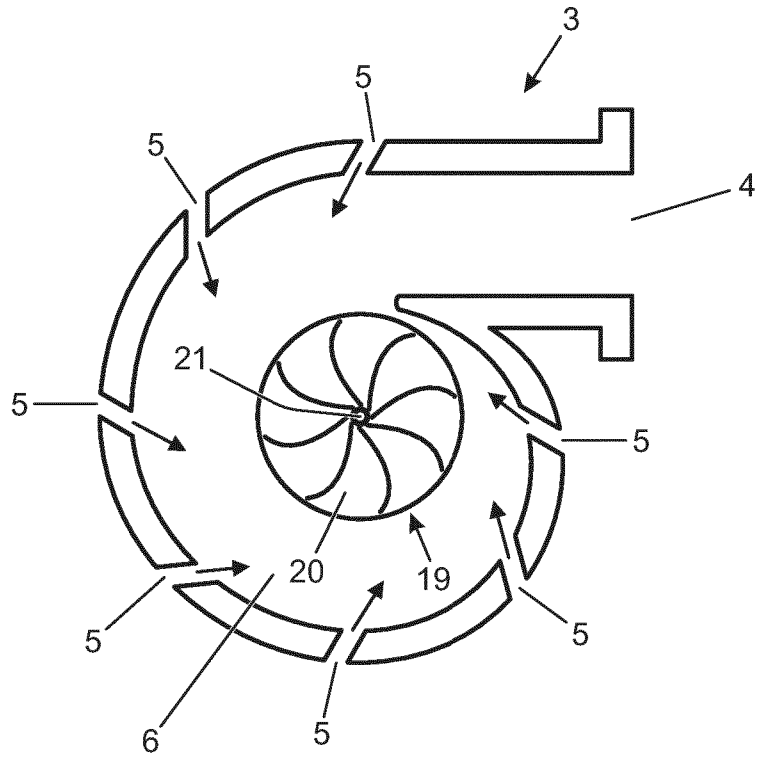

Fig. 3B

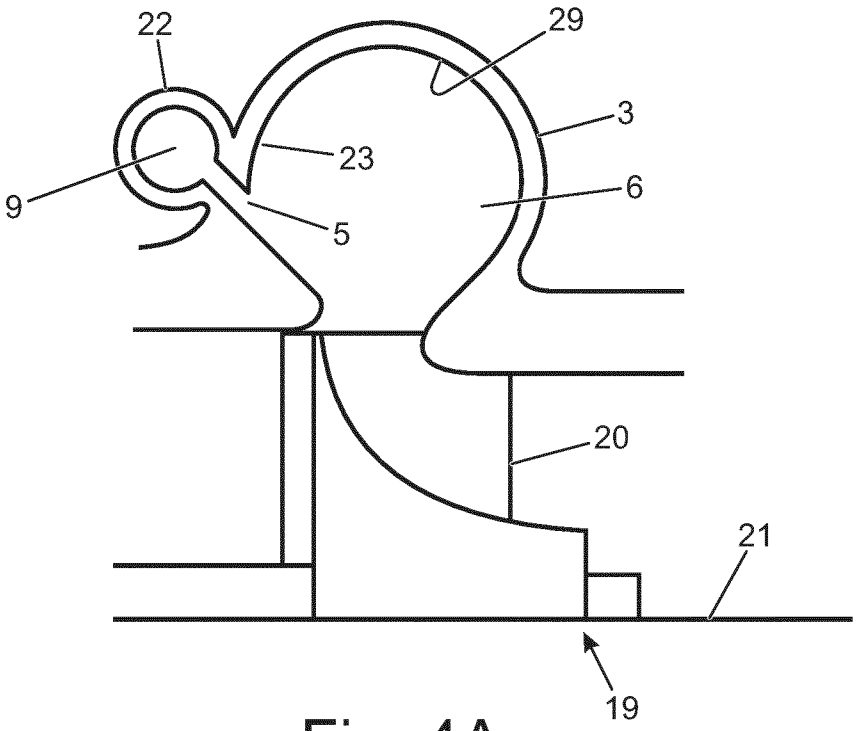

Fig. 4A

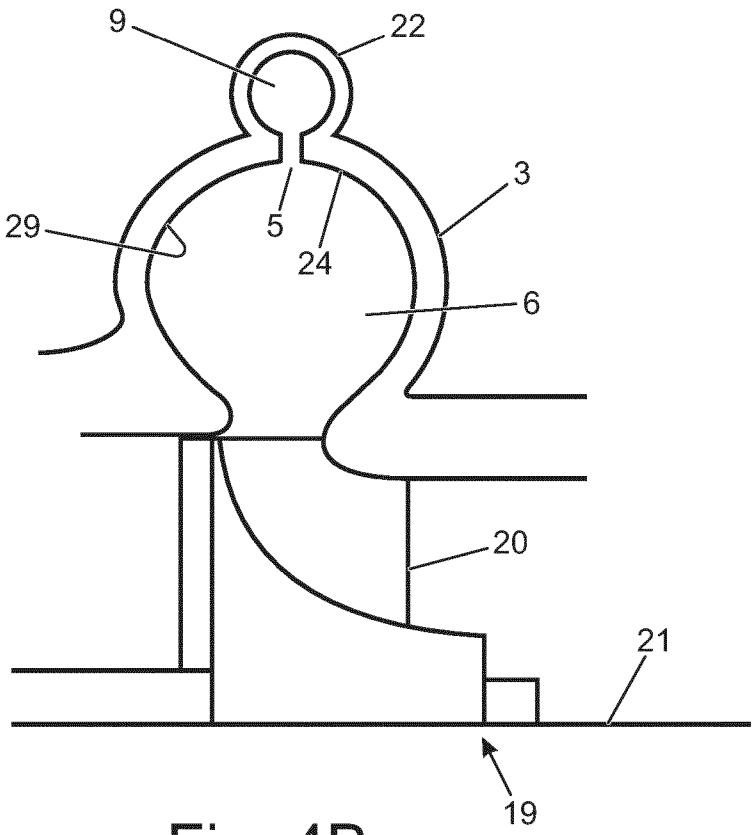

Fig. 4B

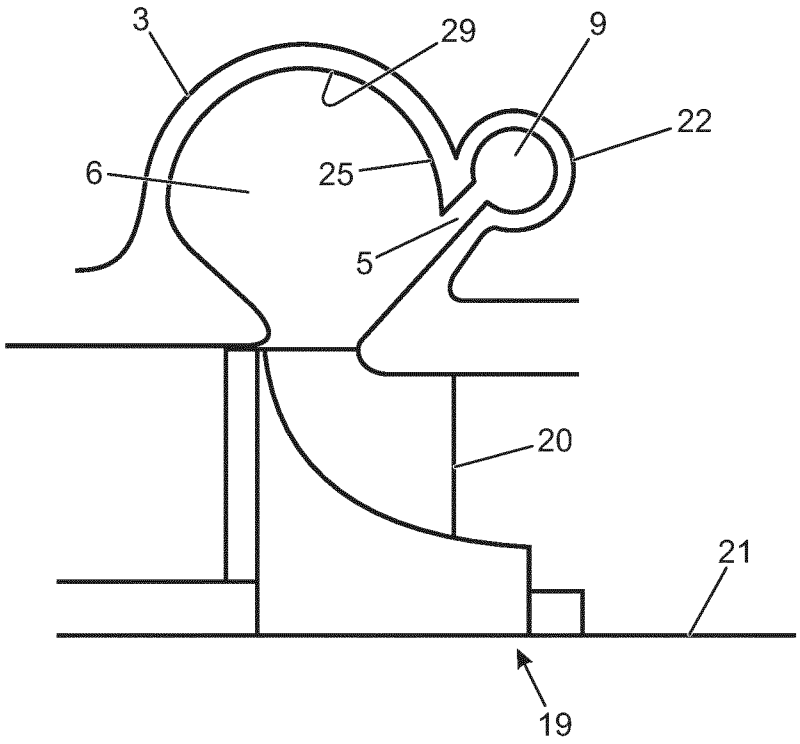
3
29
9
22
6
25
5
20
21
19

Fig. 4C

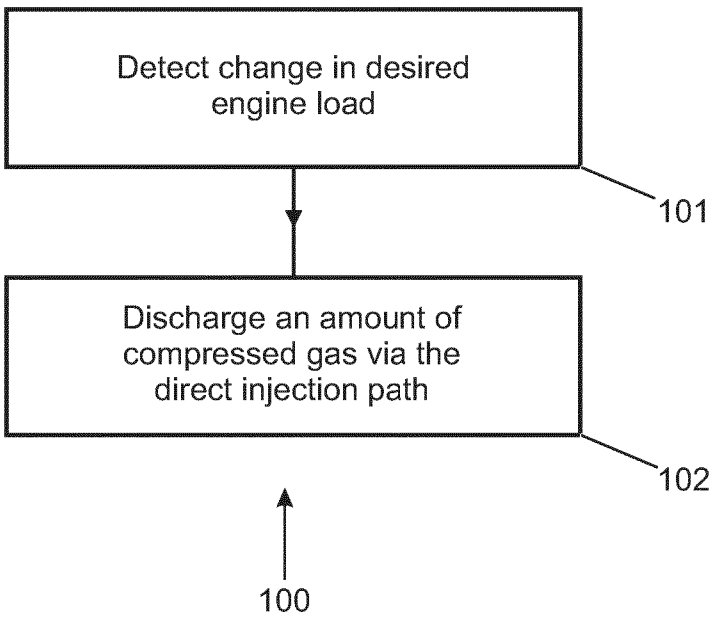
Detect change in desired engine load
101
Discharge an amount of compressed gas via the direct injection path
102
100

Fig. 6

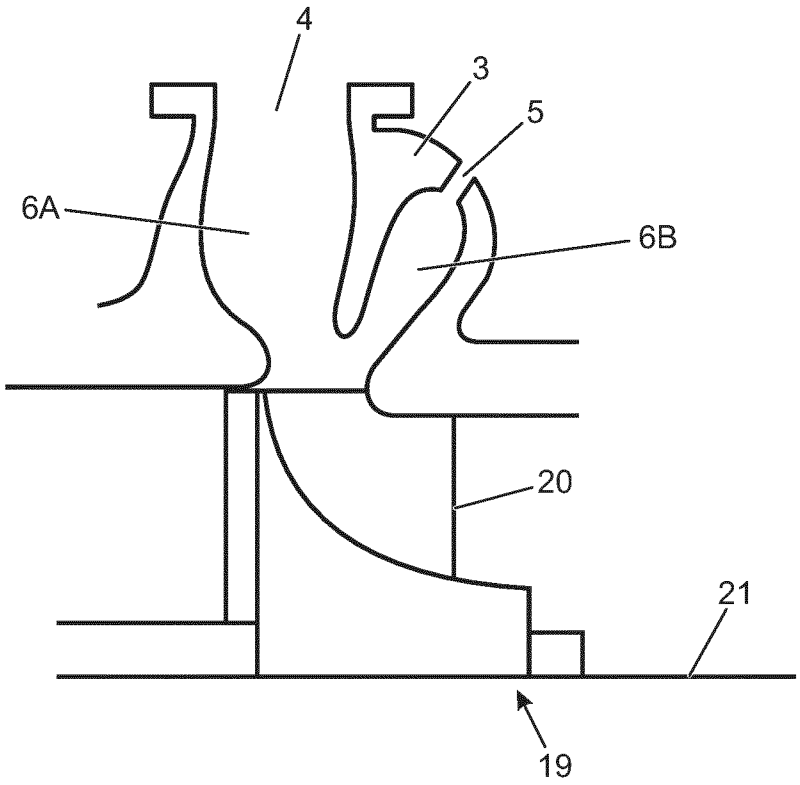

Fig. 7

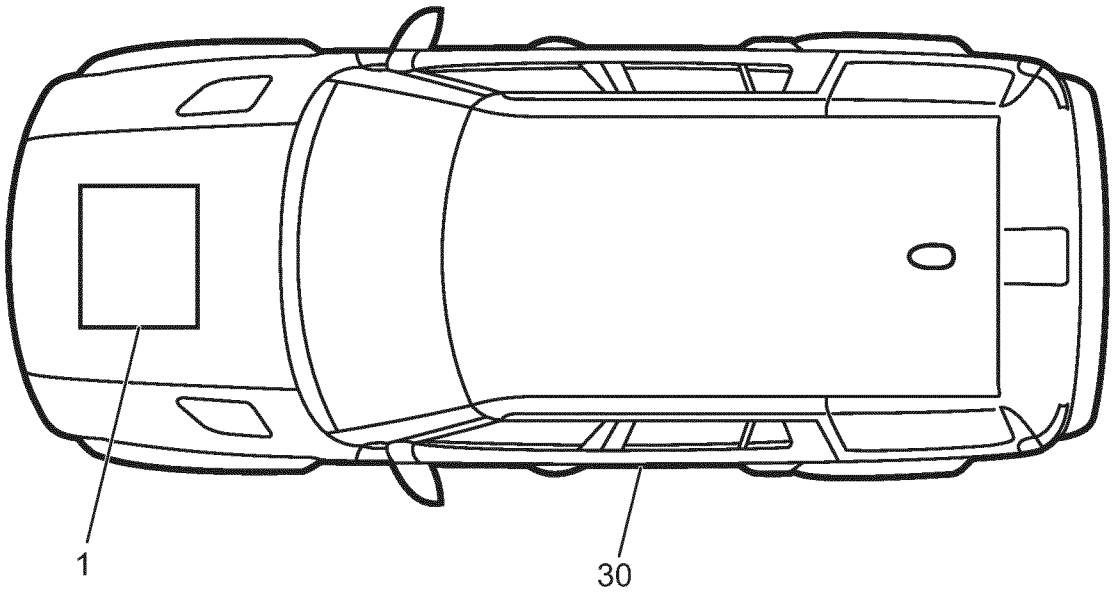

Fig. 5

INTERNATIONAL SEARCH REPORT

International application No
PCT/EP2017/068248

A. CLASSIFICATION OF SUBJECT MATTER
INV. F02B37/10 F02B37/02
ADD.

According to International Patent Classification (IPC) or to both national classification and IPC

B. FIELDS SEARCHED

Minimum documentation searched (classification system followed by classification symbols)
F02B

Documentation searched other than minimum documentation to the extent that such documents are included in the fields searched

Electronic data base consulted during the international search (name of data base and, where practicable, search terms used)
EPO-Internal, WPI Data

C. DOCUMENTS CONSIDERED TO BE RELEVANT

Category*	Citation of document, with indication, where appropriate, of the relevant passages	Relevant to claim No.
X	JP S58 98430 U (.) 4 July 1983 (1983-07-04)	1-10,23, 24,27, 28,30
Y	the whole document	11-16

X	CN 202 055 911 U (BEIBIAO) 30 November 2011 (2011-11-30) figures 4,5,6	1,23-28, 30

X	JP S58 127129 U (.) 29 August 1983 (1983-08-29)	1,23,24, 27,28,30
Y	page 2 - page 4; figures 1,2	11-16

X,P	EP 3 051 098 A1 (VOLVO CAR CORP [SE]) 3 August 2016 (2016-08-03) paragraph [0036] - paragraph [0058]; figure 1	1,13,16, 25

☐ Further documents are listed in the continuation of Box C.

☒ See patent family annex.

* Special categories of cited documents :

"A" document defining the general state of the art which is not considered to be of particular relevance

"E" earlier application or patent but published on or after the international filing date

"L" document which may throw doubts on priority claim(s) or which is cited to establish the publication date of another citation or other special reason (as specified)

"O" document referring to an oral disclosure, use, exhibition or other means

"P" document published prior to the international filing date but later than the priority date claimed

"T" later document published after the international filing date or priority date and not in conflict with the application but cited to understand the principle or theory underlying the invention

"X" document of particular relevance; the claimed invention cannot be considered novel or cannot be considered to involve an inventive step when the document is taken alone

"Y" document of particular relevance; the claimed invention cannot be considered to involve an inventive step when the document is combined with one or more other such documents, such combination being obvious to a person skilled in the art

"&" document member of the same patent family

Date of the actual completion of the international search	Date of mailing of the international search report
5 October 2017	08/12/2017

Name and mailing address of the ISA/	Authorized officer
European Patent Office, P.B. 5818 Patentlaan 2 NL - 2280 HV Rijswijk Tel. (+31-70) 340-2040, Fax: (+31-70) 340-3016	Kolodziejczyk, Piotr

INTERNATIONAL SEARCH REPORT

International application No.
PCT/EP2017/068248

Box No. II Observations where certain claims were found unsearchable (Continuation of item 2 of first sheet)

This international search report has not been established in respect of certain claims under Article 17(2)(a) for the following reasons:

1. ☐ Claims Nos.:
because they relate to subject matter not required to be searched by this Authority, namely:

2. ☐ Claims Nos.:
because they relate to parts of the international application that do not comply with the prescribed requirements to such an extent that no meaningful international search can be carried out, specifically:

3. ☐ Claims Nos.:
because they are dependent claims and are not drafted in accordance with the second and third sentences of Rule 6.4(a).

Box No. III Observations where unity of invention is lacking (Continuation of item 3 of first sheet)

This International Searching Authority found multiple inventions in this international application, as follows:

see additional sheet

1. ☐ As all required additional search fees were timely paid by the applicant, this international search report covers all searchable claims.

2. ☐ As all searchable claims could be searched without effort justifying an additional fees, this Authority did not invite payment of additional fees.

3. ☐ As only some of the required additional search fees were timely paid by the applicant, this international search report covers only those claims for which fees were paid, specifically claims Nos.:

4. ☒ No required additional search fees were timely paid by the applicant. Consequently, this international search report is restricted to the invention first mentioned in the claims; it is covered by claims Nos.:

1-13, 16, 27, 28, 30(completely); 14, 15, 23-26(partially)

Remark on Protest

☐ The additional search fees were accompanied by the applicant's protest and, where applicable, the payment of a protest fee.

☐ The additional search fees were accompanied by the applicant's protest but the applicable protest fee was not paid within the time limit specified in the invitation.

☐ No protest accompanied the payment of additional search fees.

FURTHER INFORMATION CONTINUED FROM PCT/ISA/ 210

This International Searching Authority found multiple (groups of) inventions in this international application, as follows:

1. claims: 1-13, 16, 27, 28, 30(completely); 14, 15, 23-26(partially)

   A system comprising a turbocharger, with a turbine housing and gas storage means.

   ---

2. claims: 17, 29(completely); 14, 15(partially)

   A method for controlling a turbocharger.

   ---

3. claims: 18, 21(completely); 23-26(partially)

   A turbine housing having a second turbine housing inlet having means for adapting the velocity of the injected gas.

   ---

4. claims: 19, 22(completely); 23-26(partially)

   A turbine housing having a plurality of second turbine housing inlets disposed at intervals around the turbine housing.

   ---

5. claims: 20(completely); 23-26(partially)

   A turbine housing with a directed path oriented towards a position configured to receive turbine blades of a turbine wheel.

INTERNATIONAL SEARCH REPORT

Information on patent family members

International application No
PCT/EP2017/068248

Patent document cited in search report	Publication date	Patent family member(s)	Publication date
JP S5898430 U	04-07-1983	NONE	
CN 202055911 U	30-11-2011	NONE	
JP S58127129 U	29-08-1983	NONE	
EP 3051098 A1	03-08-2016	CN 105840296 A	10-08-2016
		EP 3051098 A1	03-08-2016
		US 2016222874 A1	04-08-2016