W. L. BLISS.

AUTOMATIC RELAY FOR ELECTRIC REGULATORS.

APPLICATION FILED APR. 13, 1912.

1,199,046.

Patented Sept. 26, 1916.

2 SHEETS—SHEET 1.

Fig. 1

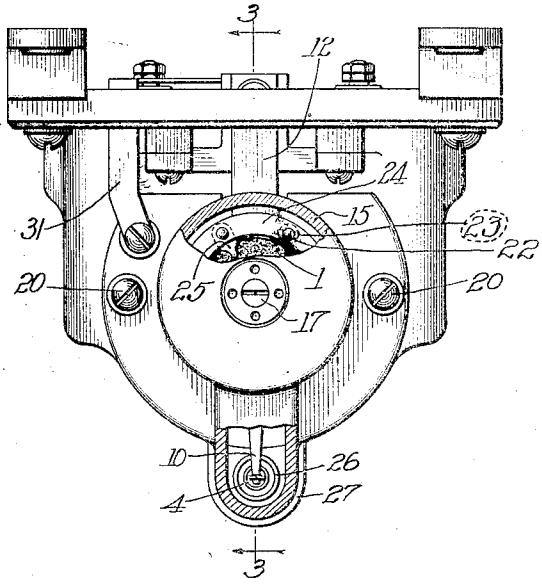

Fig. 2.

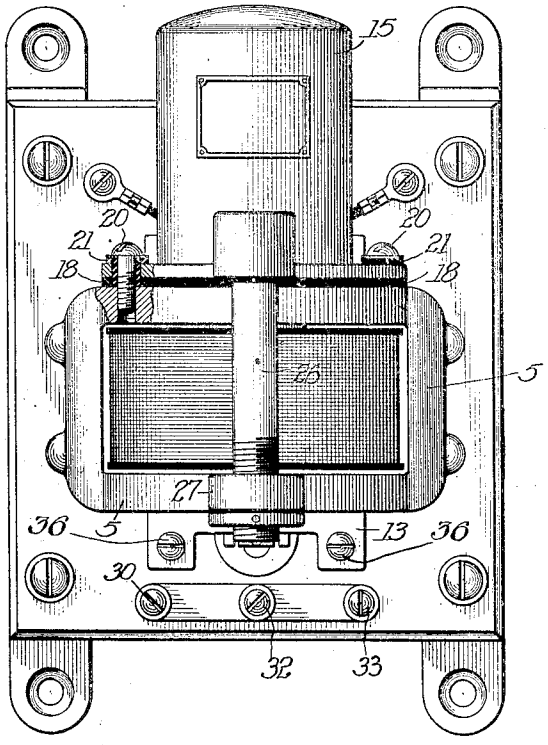

Witnesses:
Robert A. Weir
Geo. B. Jones.

Inventor
William L. Bliss.
by: Edwin B. A. Lowe Jr.
Atty

W. L. BLISS.

AUTOMATIC RELAY FOR ELECTRIC REGULATORS.

APPLICATION FILED APR. 13, 1912.

1,199,046.

Patented Sept. 26, 1916.

2 SHEETS—SHEET 2.

Fig. 3.

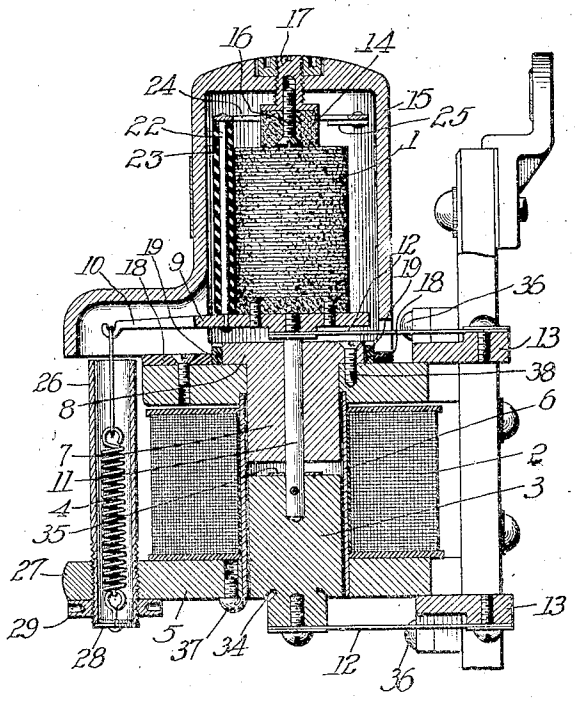

Fig. 4.

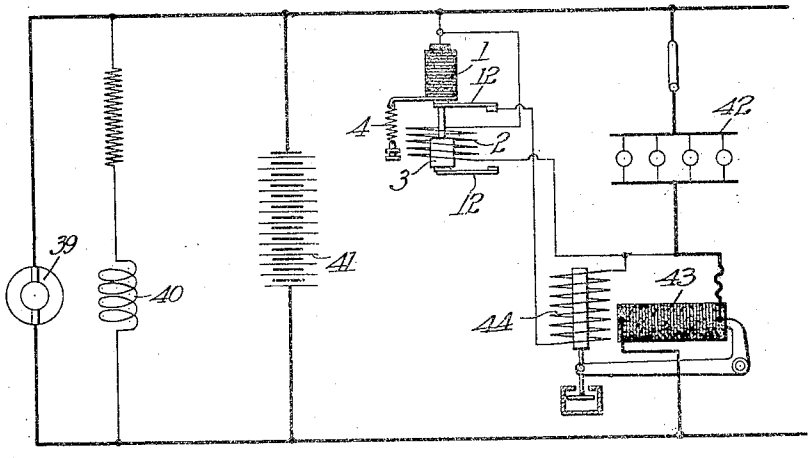

Witnesses,
Robert F. Weir.
Geo. B. Jones

Inventor,
William L. Bliss
by: Edwin B. Stason, Jr.
Atty.

UNITED STATES PATENT OFFICE.

WILLIAM L. BLISS, OF NIAGARA FALLS, NEW YORK, ASSIGNOR, BY MESNE ASSIGNMENTS, TO U. S. LIGHT & HEAT CORPORATION, OF NIAGARA FALLS, NEW YORK, A CORPORATION OF NEW YORK.

AUTOMATIC RELAY FOR ELECTRIC REGULATORS.

1,199,046. Specification of Letters Patent. **Patented Sept. 26, 1916.**

Application filed April 13, 1912. Serial No. 690,577.

To all whom it may concern:

Be it known that I, WILLIAM L. BLISS, a citizen of the United States, residing at Niagara Falls, in the county of Niagara and State of New York, have invented new and useful Improvements in Automatic Relays for Electric Regulators, of which the following is a full, clear, concise, and exact description, reference being had to the accompanying drawing, forming a part of this specification.

My invention relates to electric relays.

It is particularly adapted to be used in automatic electric regulators.

One of the objects of the invention is to provide an improved relay for increasing the sensitiveness of the automatic electric regulator in which it is used.

Another object is to provide a relay which is compact, self-contained, and in which the moving parts are protected from external injury or from unauthorized adjustment.

A further object is to provide a relay which is very sensitive in operation, which is extremely dead beat in action, and which is not subjected to objectional heating effects.

Other objects will be apparent from the description which follows.

The relay may assume various forms.

In the accompanying drawings I have illustrated one form which I have worked out in practice and which has many important commercial advantages. The views in the drawings are as follows:

Figure 1 is a top plan view of the preferred form of relay. Fig. 2 is a front elevation thereof. Fig. 3 is a sectional elevation on the line 3, 3, of Fig. 1. Fig. 4 is a diagram showing the relay connected in the regulator circuit.

The relay is provided with carbon disks 1 preferably arranged in a vertical column or pile. The resistance of the carbons is controlled by the winding 2, which is made of fine wire and is adapted to respond to variation in voltage. The voltage winding 2, when energized, draws up its plunger 3, compressing the carbon disks and thereby reducing the resistance thereof. This upward movement is opposed by an adjustable spring 4 which normally relaxes the pressure on the carbons.

The voltage winding or solenoid 2 is carried by an iron solenoid frame or magnet frame 5 in the center of which is located a brass tube 6, inside of which the movable plunger 3 is adapted to slide freely. A fixed plunger 7 is also arranged within the magnet frame, and is preferably fitted into an opening in the upper portion thereof and supported by its flange 8, which is screwed to said frame. The movable plunger and the fixed core are of comparatively large cross section and short length. As a result the magnetic circuit which is completed therethrough, is of low density or low saturation, whereby ample magnetic pull is secured and whereby the operation is very sensitive and stable.

The upward movement of the plunger 3 necessary to cause a sufficient compression of the carbon pile is very slight. The carbon pile is mounted above the magnet frame 5, preferably on an aluminum plate or disk 9 which has an arm 10 extending therefrom and provided with a hook at its outer end for convenience in attaching the retractile spring 4 thereto. The metal plate acts as a terminal member for the carbon pile and is carried on the upper end of a tail rod 11 which may be of brass or other suitable non-magnetic material. The tail rod has a reduced portion which is preferably screwed into a central opening in said terminal plate, said reduced end passing through a small washer and the end of a resilient reed 12, said resilient reed and said washer being clamped between said plate 9 and the shoulder formed by the reduced portion of said rod.

The resilient reed constitutes one of a pair of flexible conducting spring reeds 12 which support the weight of the carbon pile 1, the movable plunger 3, the terminal plate 9 and the tail rod 11 which connects the above elements. The tail rod is rigidly secured to the lower plunger 3 and passes loosely through the upper fixed plunger or core 7.

The supporting spring reeds 12 are relatively long compared to the length of the movable core 3 and are attached to suitable supports 13 screwed to the magnet frame so that they may be readily removed therefrom, as hereinafter described. These reeds afford a flexible, frictionless, stable support for the moving elements and permit said moving elements to move parallel to them-

selves substantially without sidewise deflection or obliquity. This condition also follows from the fact that the vertical movement of these parts is very slight.

The slight up and down movement of the plate 9 is communicated to the base of the carbon pile supported thereon. The upper end of the carbon pile is immovable and abuts against a carbon block 14 carried by the upper casing 15 to which it is secured in any suitable manner, as, for example, by means of the coöperating screws 16, 17. The upper casing 15 may be made of any suitable material, magnetic or otherwise, but preferably conducting material. This upper casing protects the carbon pile and also acts as an electrode, the circuit from the carbon pile being completed through the same. The metal casing 15 is insulated from the magnet frame 5 by means of the insulating washers and bushings 18 and 19 and is removably secured thereto, preferably by means of two screws 20, which are insulated from said casing by suitable insulating bushings 21. The upper casing 15 is preferably bored out to fit accurately around the bushing 19 and thus bring said casing concentric with the magnetic frame.

Lateral motion in the carbon pile is prevented preferably by three posts or stanchions 22 which are riveted to the supporting plate 9. Each stanchion is preferably surrounded by an insulating tube 23 of lava or other suitable material. The ends of the stanchions are secured to a retaining ring 24, which has a plurality of small clips 25 riveted thereto. These clips extend radially inward, thereby preventing the carbon disks from falling out in case the regulator is inadvertently turned up side down while the casing is removed. The clips 25 may be swung outwardly, however, if for any reason it is desired to remove the carbon disks. It will thus be seen that the carbon pile is supported in a vertical position, thereby preventing any displacement of the disks and relieving them of all side friction against guides. The lava tubes 23 move with the carbons except those near the top of the pile, due to the fact that said tubes rest on the supporting plate 9 and thereby partake of its up and down movement in the same manner as do the carbon disks and particularly the lower ones. This reduces side friction to a minimum in case the carbon disks come in contact with the guides, which is not ordinarily the case.

The relay is adjusted by altering the adjustment of the spring 4. This spring is housed inside of a brass tube 26 which is carried in a lug 27 cast integrally with the magnetic frame. Accordingly, the spring is both protected and concealed. The upper end of the spring is secured to the arm 10 and the lower end thereof is secured to a cap 28 which fits loosely within the lower end of the tube 26 and swivels freely therein. The tension of the spring is adjusted by turning the brass tube 26, which has screw-threaded engagement with the lug 27. After the spring has been properly adjusted the tube 26 is locked into position by the locknut 29. By means of this spring adjustment the voltage coil 2 may be made to respond to different voltage values.

The circuit through the resistance element may be traced from the terminal 30 through a suitable connection to the solenoid frame, and thence to the resilient supporting reeds through the supporting plate 9 to the carbon disks. The circuit from the carbon disks is completed through the casing 15, thence through the conducting strap 31 (Fig. 1), returning to the coil terminal 32 by a suitable connection, not shown. The circuit of the voltage winding 2 may be traced from the terminal 30 through suitable connections, not shown, to the terminal 33.

The relay may be readily dismantled in the following manner: First disconnect the conducting strap 31 and remove the screws 20 to permit the removal of the casing 15. The spring 4 may now be unhooked from the arm 10 and the supporting plate 9 rotated in a direction to unscrew the same from the spindle 11. The plate 9 and the carbon pile supported thereon may thus be readily removed as a unit. In unscrewing the plate 9 a suitable tool may be inserted in one of the holes 34 in the movable plunger 3 to prevent turning of the same. The movable plunger 3, the spindle 11 carried thereby, the small brass washer 35 surrounding said spindle, and the lower resilient reed 12 may all be removed simply by removing the screws 36, by means of which the supporting piece 13 is screwed to the magnet frame. The removal of these screws permits the above mentioned parts to be drawn downwardly and removed from the magnet frame. In like manner the upper resilient reed 12 may be lifted by removing the corresponding screws 36 which hold the upper supporting member 13. The removal of the retaining screw 37 permits the withdrawal of the brass tube 6. The fixed core 7 may now be removed by removing the single retaining screw 38. The removal of the brass tube 26, in a manner that will be apparent, permits the coil 2 to be slipped out of the magnet frame. In assembling the parts the above steps are followed in the reverse order.

The relay described above is very compact and self-contained and the moving parts are carefully protected from all external injury and from being tampered with by unauthorized persons. The design is such that a relatively large electro-magnetic coil is possible

whereby it may be operated at a low current density, which prevents any material change in resistance due to heating and, therefore, maintains the accurate adjustment of the relay during operation. Due to the design of the magnetic circuit with large cross section for the magnetic parts, the instrument is very sensitive and stable, and the saturation in the magnetic parts is very low. Furthermore, the action of the plunger is extremely dead beat and no dash pot is required to steady its movement. The movable magnetic element is supported on frictionless, parallel motion reeds which obviate the difficulties which may be encountered with other forms of supporting devices. The inertia of the moving parts has been reduced to a minimum, which conduces to quick action, stability and dead beat movement. The construction is such that the parts are readily accessible for inspection simply by detaching the conducting strap and removing the two screws which hold the upper casing to the magnetic frame. When the upper casing is removed, the parts are all exposed for inspection and there is no derangement of the parts or opening of circuits due to such removal, other than that due to the removal of said strap.

The relay may be connected in circuit in various ways preferably as part of an automatic electric regulator for the purpose of increasing the sensitiveness of the regulation. The diagram in Fig. 4 illustrates one form of circuit arrangement. Current is supplied to a circuit by a variable speed generator having an armature 39 and a shunt field winding 40. A storage battery 41 and translating devices 42 are connected across said circuit in parallel branches. In order to prevent an excessive voltage from being impressed on the translating devices which are illustrated in the form of electric lamps, a lamp regulator is provided. This regulator has a variable pressure rheostat 43 connected in series with the lamps and a voltage coil or controlling winding 44 connected around the lamps between the same and the storage battery. The carbon pile 1 of the relay is connected in series with said voltage winding 44. The voltage coil 2 of the relay is connected in a shunt circuit in parallel with the lamps. When the voltage of the circuit across which the voltage coil 2 is connected, tends to rise above a certain predetermined value, the increased energization of said winding causes a decrease in the carbon resistance 1, and a consequent increase in the energization of the controlling winding 44, which latter winding acts to insert resistance in series with the translating devices by decreasing the pressure applied to the variable pressure rheostat 43. Accordingly, the increased resistance in series with the lamps compensates for the excessive voltage tending to be impressed thereon, and as a result the lamp voltage is maintained within the predetermined limit. During the operation just described, the current flowing in the regulating solenoid 44 is increased due to two factors; first, the increase due to the increased voltage applied to said solenoid, and, second, the increase due to the decrease in the resistance 1. Accordingly, a double increase or magnifying effect is secured whereby the regulator responds more readily to a slight increase in voltage than would be the case if the relay were not employed.

It is to be understood, of course, that the circuit diagram referred to is selected merely for the purpose of illustrating one form of circuit connection which may be employed. It is also to be understood that the type of lamp regulator shown and described was selected for the purpose of illustration only. It is obvious that the relay may be used in connection with various forms of regulators or analogous devices.

It is apparent that the form of relay shown and described was selected simply for the purpose of illustrating a preferred embodiment of the invention. Other embodiments may, of course, be devised. Accordingly, I do not desire to limit myself to the construction shown, but desire to cover broadly any suitable equivalent means for accomplishing the desired results as long as said means fall within the scope of the appended claims.

Having thus described my invention, what I claim as new and desire to secure by Letters Patent of the United States is:

1. A relay comprising a pile of carbon disks, a solenoid and core therefor, said solenoid when energized adapted to increase the pressure on said pile of disks through movement of said core, a resilient mounting for said core, and a spring tending to move said core in a direction to relax said pressure.

2. A relay comprising a solenoid, a fixed core, and a movable core, said cores being of comparatively large cross section and short length whereby the magnetic saturation is relatively low, the air gap between said fixed core and said movable core being slight for the purpose of securing an ample magnetic pull for a short distance, said movable core being carried by the ends of a pair of resilient reeds.

3. A relay comprising a solenoid, a fixed core, a movable core, said cores being of comparatively large cross section and short length whereby the magnetic saturation is relatively low, the air gap between said fixed plunger and said movable plunger being slight for the purpose of securing an ample magnetic pull for a short distance, said movable core being carried by the ends

of a pair of resilient reeds, and a pile of carbon disks also supported by said resilient reeds.

4. A relay comprising an electromagnetic winding, a core therefor constructed in two sections, one of which is stationary and the other of which is movable, said movable section being supported by a pair of resilient reeds, a pile of carbon disks arranged above said winding and also supported by said reeds, the latter tending normally to compress said carbon disks, and an adjustable spring associated with said movable parts and acting in opposition to the tendency of said reeds.

5. A relay comprising an electromagnetic winding, a core therefor constructed in two sections, one of which is stationary and the other of which is movable, said movable section being supported by a pair of resilient reeds, a pile of carbon disks arranged above said winding and also supported by said reeds, said reeds tending normally to compress said carbon disks, and an adjustable spring associated with said movable parts and acting in opposition to the tendency of said reeds, said electromagnetic winding when energized acting in opposition to said spring, thereby tending through the movement of said movable section to assist in compressing said carbon disks.

6. In combination, a pile of resistance plates, a voltage responsive coil acting when energized to increase the pressure on said resistance plates to decrease the resistance of said pile, said voltage responsive coil having a movable core normally impelled in a direction to increase said pressure, and an adjustable spring associated with said core for restraining said movement and acting in opposition to the pull exerted by said voltage coil.

7. A relay comprising an electromagnet, and a carbon pile mounted thereon, said carbon pile having a protecting casing secured to but insulated from the frame of said magnet and constituting one terminal of said carbon pile, said frame constituting the other terminal.

8. A carbon pile resistance arranged vertically and having a movable terminal member supporting the same, said terminal member being provided with upright guides for preventing lateral displacement of the carbon pile, said guides partaking of the movement of the lower portion of said carbon pile caused by variation in pressure thereon whereby relative vertical movement between said carbon pile as a whole and said guides is reduced to a minimum.

9. A carbon pile resistance arranged vertically and having a movable terminal member for supporting the same, said movable terminal member being resiliently mounted and normally impelled in a direction to increase the pressure on the carbon pile, and a spring tending to offset the pressure exerted by said terminal member, said spring being adjustable to regulate the normal compression of said pile.

10. A relay comprising an electromagnet having a magnetic frame, a movable core therefor, two resilient reeds secured near the outer portion of said frame and extending radially inward, said core being supported by the inner ends of said reeds.

11. A relay comprising an electromagnet having a magnetic frame, a movable core therefor, two resilient reeds secured near the outer portion of said frame and extending radially inward, said core being supported by the inner ends of said reeds, a projecting tube also carried by said frame, a spring arranged in said tube, and means connecting said spring with said core whereby adjustment of said spring regulates the movement of said core.

12. In combination, a magnet frame, an electro-magnetic winding carried thereby, a movable plunger for said electro-magnetic winding, resilient reeds for supporting said plunger, and supporting members to which said resilient reeds are rigidly secured at one end, said supporting members being mounted on said magnet frame but being detachable therefrom, whereby said resilient reeds and said plunger may be readily removed from said magnet frame without detaching said reeds from their immediate supports.

In witness whereof, I have hereunto subscribed my name in the presence of two witnesses.

WILLIAM L. BLISS.

Witnesses:
T. J. Callahan,
C. E. Mead.