(12) INTERNATIONAL APPLICATION PUBLISHED UNDER THE PATENT COOPERATION TREATY (PCT)

(19) World Intellectual Property Organization
International Bureau

(43) International Publication Date
11 August 2016 (11.08.2016)

WIPO | PCT

(10) International Publication Number
WO 2016/126328 A1

(51) International Patent Classification:
F04B 51/00 (2006.01) *F04D 15/00* (2006.01)
F04C 14/28 (2006.01) *G01M 13/02* (2006.01)

(21) International Application Number:
PCT/US2015/065166

(22) International Filing Date:
11 December 2015 (11.12.2015)

(25) Filing Language: English

(26) Publication Language: English

(30) Priority Data:
62/112,403 5 February 2015 (05.02.2015) US

(71) Applicant: **PARKER-HANNIFIN CORPORATION** [US/US]; 6035 Parkland Boulevard, Cleveland, Ohio 44124 (US).

(72) Inventors: **KUYVENHOVEN, Willem**; 8071 Alimoore Green, Dublin, Ohio 43016 (US). **MERRILL, Kyle**; 1742 Caraway Lane, Marysville, Ohio 43040 (US). **THEISS, Ken**; 7272 Winchester Road, Carroll, Ohio 43112 (US).

(74) Agent: **FAFRAK, Kenneth W.**; 1621 Euclid Ave., 19th floor, Cleveland, Ohio 44115 (US).

(81) Designated States *(unless otherwise indicated, for every kind of national protection available)*: AE, AG, AL, AM, AO, AT, AU, AZ, BA, BB, BG, BH, BN, BR, BW, BY, BZ, CA, CH, CL, CN, CO, CR, CU, CZ, DE, DK, DM, DO, DZ, EC, EE, EG, ES, FI, GB, GD, GE, GH, GM, GT, HN, HR, HU, ID, IL, IN, IR, IS, JP, KE, KG, KN, KP, KR, KZ, LA, LC, LK, LR, LS, LU, LY, MA, MD, ME, MG, MK, MN, MW, MX, MY, MZ, NA, NG, NI, NO, NZ, OM, PA, PE, PG, PH, PL, PT, QA, RO, RS, RU, RW, SA, SC, SD, SE, SG, SK, SL, SM, ST, SV, SY, TH, TJ, TM, TN, TR, TT, TZ, UA, UG, US, UZ, VC, VN, ZA, ZM, ZW.

(84) Designated States *(unless otherwise indicated, for every kind of regional protection available)*: ARIPO (BW, GH, GM, KE, LR, LS, MW, MZ, NA, RW, SD, SL, ST, SZ, TZ, UG, ZM, ZW), Eurasian (AM, AZ, BY, KG, KZ, RU, TJ, TM), European (AL, AT, BE, BG, CH, CY, CZ, DE, DK, EE, ES, FI, FR, GB, GR, HR, HU, IE, IS, IT, LT, LU, LV, MC, MK, MT, NL, NO, PL, PT, RO, RS, SE, SI, SK, SM, TR), OAPI (BF, BJ, CF, CG, CI, CM, GA, GN, GQ, GW, KM, ML, MR, NE, SN, TD, TG).

Published:

— *with international search report (Art. 21(3))*

(54) Title: ACOUSTIC/VIBRATION PREDICTION OF HYDRAULIC PUMPS

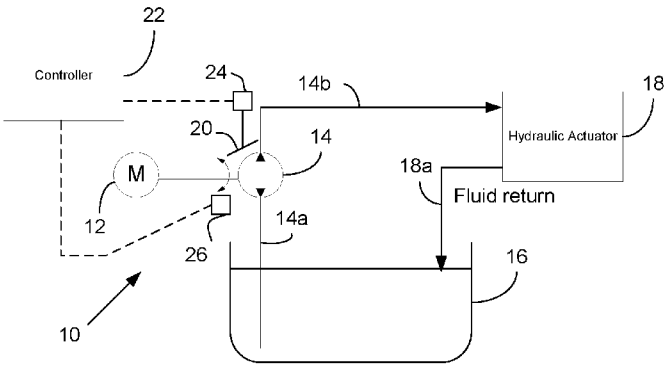

FIG. 2

(57) Abstract: A fluid pumping system comprises a fluid machine (14); a sensor (26) operatively coupled to the fluid machine, the sensor being configured to obtain at least one of vibration data or acoustic data from the fluid machine; and a controller (22) communicatively coupled to the sensor. The controller includes a logic configured: to obtain at least one of the vibration data or the acoustic data from the sensor; to produce a characteristic signature for the machine based on the vibration data or the acoustic data; to compare the characteristic signature to a plurality of baseline signatures stored in a library of baseline signatures, each baseline signature characteristic of a prescribed operating condition of the fluid machine; and to predict an operation state of the fluid machine based on the comparison. The corresponding method for predicting an operational status of a fluid machine is also disclosed.

WO 2016/126328 A1

ACOUSTIC/VIBRATION PREDICTION OF HYDRAULIC PUMPS

Field of Invention

The present invention relates generally to fluid pumps, and more particularly to a method and system for predicting a condition of a fluid pump based on signature analysis.

Background

Fluid pumps are used in various systems to move fluid from one area to another. For example, in hydraulic systems fluid pumps provide pressurized hydraulic fluid to an actuator to effect motion of the actuator, while in water purification systems fluid pumps move water through filters to remove contaminants. As will be appreciated, failure of a fluid pump prevents operation of the system. Moreover, destructive failure of a fluid pump can cause damage to pump itself but also to other portions of the system. Therefore, it can be advantageous to determine in advance when a fluid pump is not operating in an efficient manner and/or when failure of the fluid pump is about to occur, thereby enabling the fluid pump to be taken offline for repair prior to damage.

Summary of Invention

A method and system in accordance with the present disclosure enable the health and/or status of a mechanical device, such as a fluid pump, to be ascertained. More particularly, by integrating sensors into or on the fluid pump, signature data characteristic of the fluid pump can be collected to derive a characteristic signature. The characteristic signature then can be compared to a

library of baseline signatures to determine health, condition or suitability of the fluid pump.

The signature of noise and vibration (or any other sensors in combination) can be stored in and comparatively utilized while the pump is operating in its intended environment. Characteristic signatures obtained from the pump during operation can be compared against baseline signatures stored in a database, and based on the comparison a condition of the pump can be estimated to provide an advance indication of installation issues, performance degradation, imminent failure, etc.

For example, while the fluid pump is on a production test stand of the pump manufacture (e.g., prior to shipment of the pump to an end-user) a characteristic signature of the fluid pump can be derived and compared to a baseline signature corresponding to a normally functioning pump. In this manner, it can be determined if the pump operates satisfactorily without the need to run an extensive break-in test, thus saving considerable test time (e.g., minutes vs. hours). Further, the signatures can be used to determine which areas of the pump may be failing, such as bearings, reciprocating pistons, rotating group integrity, and/or determine operating conditions that may be causing pump damage/failure, such as pressure ripples, pressure chamber functionality, etc.

According to one aspect of the invention, a method for predicting an operational status of a fluid machine includes: obtaining at least one characteristic signature of the fluid machine during operation of the fluid machine; comparing the at least one characteristic signature to a plurality of baseline signatures stored in a library of baseline signatures, each baseline

signature characteristic of a prescribed operating condition of the fluid machine; and predicting an operation state of the fluid machine based on the comparison.

Optionally, the characteristic signature includes at least one of a vibration signature or an acoustic signature.

Optionally, the method includes periodically storing the characteristic signature of the fluid machine obtained during machine operation to form a plurality of characteristic signatures corresponding to operation of the machine in a specific application; and using the plurality of characteristic signatures to revise at least one baseline signature of the plurality of baseline signatures.

Optionally, periodically storing the characteristic signature includes periodically storing at least one other characteristic of the fluid machine.

Optionally, the at least one other characteristic of the fluid machine is a machine speed, fluid flow through the machine, or a torque applied to the machine.

Optionally, the at least one other characteristic comprises at least one of fluid temperature, case pressure, swashplate angle, fluid viscosity, fluid density, fluid dielectric constant, fluid inlet pressure or fluid outlet pressure.

Optionally, obtaining the characteristic signature of the fluid machine during operation comprises obtaining the characteristic signature during an initial test of the fluid machine.

Optionally, the method includes ending the initial test upon the characteristic signature corresponding to a prescribed baseline signature of the plurality of baseline signatures.

Optionally, the initial test comprises a break-in test of the fluid machine.

Optionally, predicting the operation state comprises predicting an operation state corresponding to at least one of an impending failure, performance degradation or normal operation.

Optionally, obtaining the characteristic signature includes using at least one sensor configured to obtain vibration data from the fluid machine or acoustic data from the machine, and producing a characteristic signature based on the obtained vibration data or acoustic data.

Optionally, predicting an operation state of the fluid machine includes predicting an operation state of a component of the fluid machine.

Optionally, the component comprises a bearing, a reciprocating piston, a rotating assembly or a pressure chamber.

Optionally, the fluid machine is at least one of a vane machine, a gear machine, a piston machine or a gerotor machine.

According to another aspect of the invention, a controller for predicting a change in operational status of a fluid machine includes a processor and memory; and logic stored in memory and executable by the processor, the logic including logic configured to cause the processor to execute the method described herein.

Optionally, predicting an operation state of the fluid machine includes determining the fluid machine has been operated outside prescribed operating conditions based on the comparison.

Optionally, predicting an operation state of the fluid machine includes determining a maintenance schedule of the fluid machine based on the comparison.

Optionally, the method includes cost-reducing the fluid machine based on the comparison.

Optionally, cost reducing the fluid machine includes revising a design of the fluid machine.

Optionally, the method includes enhancing a design of the fluid machine based on the comparison.

According to another aspect of the invention, a fluid pumping system includes: a fluid machine; a sensor operatively coupled to the fluid machine, the sensor configured to obtain at least one of vibration data or acoustic data from the fluid machine; and the controller communicatively coupled to the sensor, the controller including logic configured to obtain at least one of vibration data or acoustic data from the sensor, logic configured to produce a characteristic signature for the machine based on the vibration data or the acoustic data, logic configured to compare the characteristic signature to a plurality of baseline signatures stored in a library of baseline signatures, each baseline signature characteristic of a prescribed operating condition of the fluid machine, and logic configured to predict an operation state of the fluid machine based on the comparison.

Optionally, the controller includes: logic configured to periodically store the characteristic signature of the fluid machine obtained during machine operation to form a plurality of characteristic signatures corresponding to operation of the machine in a specific application; and logic configured to use the plurality of characteristic signatures to revise at least one baseline signature of the plurality of baseline signatures.

Optionally, the logic configured to periodically store characteristic signatures includes logic configured to periodically store at least one other characteristic of the fluid machine.

Optionally, the system includes a second sensor configured to obtain data corresponding to at least one of fluid temperature, case pressure, case flow, machine speed, swashplate angle, fluid viscosity, fluid density, fluid dielectric constant, fluid inlet pressure or fluid outlet pressure, and the controller includes logic configured to store the data from the second sensor with the characteristic signature.

Optionally, the logic configured to predict an operation state of the fluid machine includes logic configured to predict an operation state of a component of the fluid machine.

The foregoing and other features of the invention are hereinafter described in greater detail with reference to the accompanying drawings.

Brief Description of the Drawings

Fig. 1A is a graphical representation of the components of an exemplary characteristic signature in accordance with the present disclosure.

Fig. 1B illustrates that the sample time for a characteristic signature can be short (e.g., a snapshot) or long (e.g., a continuous data stream over a prescribed time period).

Fig. 1C illustrates an exemplary characteristic signature expressed as a three-dimensional map.

Fig. 2 is a simple schematic diagram illustrating an exemplary hydraulic system to which principles in accordance with the present disclosure can be applied.

Fig. 3 is an exemplary fluid pump in accordance with the present disclosure.

Fig. 4A illustrates an exemplary sensor pack in accordance with the present disclosure.

Fig. 4B illustrates another exemplary sensor pack in accordance with the present disclosure.

Fig. 5 illustrates a flow chart illustrating an exemplary method for performing signature analysis in accordance with the present disclosure.

Fig. 6 illustrates an exemplary controller that can be used to implement the method according to Fig. 5.

Fig. 7A illustrates an exemplary database that may be used to store one or more signatures in accordance with the present disclosure.

Fig. 7B illustrates the database of Fig. 7A as a multi-dimensional database/historian.

Detailed Description

A system and method in accordance with the present disclosure will be described with reference to the drawings, where like reference numerals are used to refer to like elements throughout. It will be understood that the figures are not necessarily to scale. Further, the system and method will be described in the context of a fluid pump. However, the system and method in accordance with the present disclosure are also applicable to fluid motors. The term “fluid

machine" as used herein is understood to mean a fluid pump and/or a fluid motor.

In accordance with the present disclosure, data, such as vibration, acoustic and/or acceleration data, is obtained from a fluid pump and the data is analyzed to generate a characteristic signature corresponding to the vibration/acoustic/acceleration data. The characteristic signature then is compared to one or more baseline signatures stored in a library of signatures and, based on the comparison, a prediction is made with respect to the current operating state of the fluid pump.

As used herein, the term "characteristic signature" is defined as a combination of a plurality of different types of data collected over time. For example, and with reference to Fig. 1, a characteristic signature 2 may be a data stream defined by pressure data at an inlet 2a and outlet 2b of the fluid pump (Pressure A and Pressure B), a case pressure of the pump 2c, a case temperature of the pump 2d, a vibration of the pump 2e, and a speed of the pump 2f. The different types of data, which may be collected using different types of sensors, are combined to form a data stream that defines the characteristic signature.

With additional reference to Fig. 1B, the time period t over which the characteristic signature 2 is derived may be short (e.g., an instant in time) so as to form a snapshot of the collected data. Alternatively or additionally, the time t over which the characteristic signature 2 is derived may be extended (t spans a time greater than an instant in time) to form a data stream (e.g., a continuous data stream over a time period t). Fig. 1C illustrates the characteristic signature represented as a three-dimensional map.

In one embodiment, the analysis is performed to determine if the pump meets predetermined criteria of operation. More particularly, the characteristic signature is used to determine when a pump has satisfactorily passed a "break-in" run. As used herein, the term "break-in" is defined as an initial run of the pump under a prescribed load (e.g., light, normal, heavy, etc.) to enable moving parts to wear against each other to produce a size and shape adjustment that will settle the components into a stable relationship.

For example, when the pump is initially assembled and prior to initial customer operation (or after repair/refurbishment), pumps are run to provide an initial wear pattern for mechanical components (break-in). A break-in run typically is carried out for a predetermined time period, the predetermined time period being of sufficient length to conclude the pump has been satisfactorily broken-in. In accordance with the present disclosure, a characteristic signature of the pump obtained during the break-in run is compared to one or more baseline signatures to determine when the pump has been satisfactorily broken in. In this manner, the time require to perform pump break-in can be reduced, thereby increasing production efficiency and reducing costs.

For example, prior to shipment (or prior to initial install) the pump may be placed on a test stand and driven by a prime mover. Characteristic data obtained from vibration, acoustic and/or acceleration sensors can be used to derive a characteristic signature for the fluid pump. The characteristic signature then can be compared to one or more baseline signatures, the baseline signatures corresponding to a pump that has been broken in. If the characteristic signature corresponds to the base line signature(s), then it can be concluded that the pump has been satisfactorily broken in.

An advantage of the method in accordance with the present disclosure is that the time required for breaking in a pump may be reduced. More specifically, due to manufacturing tolerances some pumps may pass the break-in procedure faster than others. In the conventional method, the break-in run is carried out based on a worse-case scenario (i.e., for a time period that ensures proper break-in for pumps that may have tolerance deviations significantly different from the norm). While such methodology provides sufficient break-in of the pump, it may require that some pumps be run longer than necessary. In accordance with the method of the present disclosure, the amount of time required for the break-in run can be reduced.

In another embodiment, the analysis is performed to determine if the pump requires service and/or may be failing. For example, during normal pump operation (e.g., when the pump is placed in service in its intended application), a characteristic signature may be derived from data collected during pump operation. Such data may be collected on a periodic or continuous basis. The characteristic signature then can be compared to one or more baseline signatures stored in a library, where each baseline signature corresponds to a characteristic of a pump. More particularly, each baseline signature may correspond to a different problem associated with the pump, e.g., bearing failure, impeller balance, tampering, etc. Should the characteristic signature for the pump correspond to a baseline signature stored in the library, then it can be concluded that the current operational state of the pump corresponds to the operational state of the pump that generated the baseline signature, and appropriate action can be taken.

Further, the data collected during pump operation can be used to augment or replace the data corresponding to the baseline signatures stored in the library. For example, the specific application in which the pump operates may introduce characteristics/anomalies in the signature that could be interpreted as a problem with the pump, when in fact such data corresponds to normal operation (e.g., for a fuel pump application, injector pulses may introduce data that is within normal operating conditions of the system, yet suggest a problem with the pump). By augmenting such data into the baseline signatures, accuracy in the prediction process can be enhanced.

Referring now to Fig. 2, illustrated is an exemplary fluid power system in the form of a hydraulic system 10 to which principles in accordance with the present disclosure may be applied. The exemplary system 10 includes a prime mover 12, such as an internal combustion engine, electric motor, or the like, having an output shaft mechanically coupled to an input shaft of a fluid pump 14 (a hydraulic pump). A fluid inlet conduit 14a of the fluid pump 14 receives fluid stored in reservoir 16, and provides pressurized fluid to an actuator 18 (e.g., a hydraulic cylinder, hydraulic motor, etc.) via a fluid outlet conduit 14b. Upon exiting the actuator 18, the fluid is returned to the reservoir 16 via a return line conduit 18a.

In the illustrated embodiment the fluid pump 14 is a variable displacement fluid pump, whereby pump displacement can be varied via a rotatable swashplate 20. In this regard, a controller 22, such as a programmable logic controller or other controller, provides a signal to an actuator 24 coupled to the swashplate 20, the signal corresponding to an angular position of the swashplate 20. Based on the signal provided by the controller 22, the actuator 24 moves the

swashplate 20 to a desired angle to produce a desired displacement per revolution of the pump 14.

While a variable displacement pump is shown, it should be appreciated that other types of pumps, including fixed displacement pumps, may be used without departing from the scope of the invention. Similarly, while a hydraulic system is illustrated, the principles on accordance with the present disclosure are applicable to other applications in which a fluid pump may be utilized, e.g., a fluid filtration system, fuel pump system, etc.

Arranged on the pump is a sensor 26 (e.g., an accelerometer, an acoustic emission sensor) configured to detect vibration, sound, or the like from the fluid pump 14. In one embodiment, the sensor 26 is a stand-alone sensor, while in another embodiment the sensor 26 may be part of a sensor pack that includes at least one additional sensor for measuring a different parameter of the pump 14. The sensor 26 is communicatively coupled to the controller 22, which receives the data and based thereon generates a characteristic signature, e.g., an acoustic signature, a vibration signature, a pressure signature, etc. As used herein, the term “characteristic signature” is defined as a plurality of temporally sequential data obtained during operation of a machine over a prescribed time period. In one embodiment a characteristic signature includes a snapshot in time (e.g., a snapshot of a data stream), while in another embodiment a characteristic signature includes a stream of data from one sensor or a combination of sensors. As used herein, the term “baseline signature” is defined as a characteristic signature obtained during a known (or subsequently determined) operational state of the machine, the baseline signature characteristic of the operational state. A signature may be continuously

obtained, or may be initiated based on a defined trigger event, e.g., the occurrence of one or more predefined conditions.

The trigger event may be predefined so as to automatically collect sensor data, without the need for user interaction. More particularly, one or more trigger events can be defined based on certain operating conditions, and when those operating conditions are satisfied the trigger event becomes active.

For example, a pressure trigger event may be activated when pump output pressure is above or below a prescribed value (e.g., when pressure exceeds 3000 PSI or drops below 500 PSI). The trigger event may also have associated therewith a sampling period at which data is to be sampled when the trigger event is active. Other trigger events may be defined as needed in the pump application. Associated with each trigger event may be specific sensors and/or data points that are to be monitored and stored when the trigger event becomes active. For example, pump vibration, pump output pressure, pump speed, and fluid temperature may be associated with the pressure trigger event. Upon the pressure event becoming active, data corresponding to pump vibration, pump output pressure, pump speed and fluid temperature are recorded and stored in memory. While only four parameters are presented in the example, it should be appreciated that any number of sensor data and data points can be associated with a trigger event.

Data recording during a trigger event may continue for a prescribed time period (e.g., 5 minutes after the trigger event occurs), or until the condition that caused the trigger event is no longer active (e.g., pressure is below the maximum pressure and/or above the minimum pressure). In addition to collecting data after the trigger event, the event may be configured to collect data

corresponding to a time period just prior to the event becoming active, e.g., a five-minute window before the event. In this manner, data can be collected that may indicate why the event was triggered in the first place.

The data collected during event may be stored in a temporary memory buffer. Based on user interaction or a predefined condition, such data may be permanently stored for later use.

With additional reference to Fig. 3, illustrated is an exemplary fluid pump 14 in accordance with the present disclosure. The fluid pump 14 includes a fluid inlet 28 for receiving fluid, for example, from reservoir 16, and a fluid outlet 30 for providing fluid to a device, such as hydraulic actuator 18. The pump 14 further includes an input shaft 32 for coupling to a prime mover, the input shaft coupled to a pump mechanism (e.g., an impeller or the like. - not shown). The input shaft 32 and pump mechanism may be supported by bearings, bushings or the like (not shown) that enable rotation of the input shaft 32 relative to a housing of the pump 14 to create a pumping action within a chamber of the pump 14. Although not shown in Fig. 3, the fluid pump 14 may also include a swashplate or the like for varying a displacement of the pump as noted above.

Coupled to the fluid pump 14 is a sensor 26, such as an accelerometer for collecting vibration data, an acoustic emission sensor for collecting acoustic data, and a wire connection 34 for providing data to another device, such as the controller 22. While a wire connection is illustrated as a means for communicating data from the sensor 26 to other devices, it will be appreciated at wireless communications means may be utilized in the sensor 26 without departing from the scope of the invention.

In the embodiment shown in Fig. 3 the sensor 26 is a stand-alone sensor, i.e., no other sensors are included in the sensor assembly. It is understood, however, that the sensor 26 may be part of a sensor pack that includes one or more other types of sensors. For example, the sensor pack, in addition to the sensor 26, may include at least one additional sensor for detecting fluid temperature, case pressure, swashplate angle, fluid viscosity, fluid density, fluid dielectric constant, fluid inlet pressure, fluid outlet pressure or any other data that is of interest in the application.

Referring to Fig. 4A, illustrated is an exemplary sensor pack 36a that may be used in the system and method in accordance with the present disclosure. In the exemplary sensor pack 36a of Fig. 4A, three different sensors are illustrated within the sensor pack 36a. More particularly, the sensor pack 36a includes a vibration or acoustic sensor 26, a temperature sensor 38, which can be used to measure a temperature of the fluid or components of the pump 14, and a pressure sensor 40, which can be used to measure a fluid pressure at the inlet 28 and/or outlet 30 of the fluid pump 14. Each sensor includes a dedicated wire connection 34a, 34b and 34c for connection to the controller 22, for example.

Referring to Fig. 4B, an alternate embodiment is shown, where a sensor pack 36b includes three sensors as in the embodiment shown in Fig. 4A (i.e., a vibration/acoustic sensor 24, a temperature sensor 38, and a pressure sensor 40. The sensor pack 36b, however, further includes a communication module 42 that is communicatively coupled to each sensor 26, 38 and 40 via a communication bus 44. The communication module 42 receives data from each sensor, and provides the data to an external device, such as the controller 22, via a communication link 46. An advantage of the sensor pack 36b over the

sensor pack 36a is that only a single connection (as opposed to three) is required, thereby simplifying installation and maintenance.

Referring now to Fig. 5, illustrated are logical operations to implement an exemplary method for predicting an operation state of a fluid pump in accordance with the present disclosure. The method illustrated in Fig. 5 may be executed by the controller 22. Although Fig. 5 shows a specific order of executing functional logic blocks, the order of executing the blocks may be changed relative to the order shown. Also, two or more blocks shown in succession may be executed concurrently or with partial concurrence. Certain blocks also may be omitted. In addition, any number of functions, logical operations, commands, state variables, semaphores or messages may be added to the logical flow for purposes of enhanced utility, accounting, performance, measurement, troubleshooting, and the like. It is understood that all such variations are within the scope of the present invention.

Beginning at step 50, it is determined if a trigger event is active. As noted above, a trigger may be defined based on the needs of the application. If a trigger event is not active, the method loops at block 50. However, if a trigger event is active, the method moves to block 51 where characteristic data corresponding to operation of the fluid pump 14 is obtained via sensor 26. For example, sensor 26, such as an accelerometer configured to detect vibration or an acoustic emission sensor configured to detect acoustic data, may be used to collect vibration data and/or acoustic data and communicate such data to the controller 22. Such data may correspond to an initial run of the fluid pump (e.g., the first time the pump is run after manufacture of the pump, such as during an initial test run, or the first time the pump is run in the intended application) or

during normal operation of the pump in the intended operating environment. The obtained data then may be analyzed by the controller 22 to develop a characteristic signature as indicated at step 52. Signatures may be formed from several waveforms obtained in parallel, each wave form being derived from a separate sensor.

At step 54, one or more baseline signatures are retrieved, for example, from the storage location (e.g., memory of the controller 22). The one or more baseline signatures may be retrieved from a library of previously recorded signatures, which may include baseline signatures corresponding to different characteristics. For example, baseline signatures corresponding to normal and abnormal operation of the fluid pump 14 can be retrieved from the library. Such normal and abnormal signatures may be predefined generic signatures for a particular pump application or may be signatures created during actual operation of the fluid pump 14 in the actual pump application.

At step 56 the baseline signature(s) obtained at step 54 then is/are compared to the characteristic signature developed at step 52. The comparison may include determining if there are deviations in amplitude and/or frequency between the respective signatures, similarities and/or differences in locations of signature events (e.g., a vibration that does or does not occur at specific intervals), similarities and/or differences in harmonic frequencies, etc.

Next at step 58 it may be determined if the signature was obtained during an initial test mode of the pump 14. The initial test mode, for example, may be a mechanical run-in (break-in) test to condition the pump. By comparing the characteristic signature of the pump 14 to a baseline signature for a pump that has been broken-in, the pump 14 can be run until the signature corresponds to a

baseline signature. This process can save time as some pumps, due to tolerances, may require less break-in time than others and thus the test process can be shortened for some pumps. If at step 58 test mode is active, the method moves to step 60 where it is determined if characteristic signature sufficiently corresponds to the baseline (break-in) signature. If the characteristic signature of the pump corresponds to the baseline signature, then it can be concluded that the break-in is compete and the method moves to step 62 where the test is ended. However, if the characteristic signature does not correspond to the baseline signature, then it can be concluded that the break-in process is not complete and the method moves back to step 50 and repeats.

Moving back to step 58, if test mode is not active, the method moves to step 64 where a prediction of the operational state of the pump and/or a component of the pump (e.g., bearing, a reciprocating piston, a rotating assembly, a pressure chamber, etc.) is made based on the comparison of the characteristic signature and the baseline signature. The prediction may be based on a comparison of the characteristic signature to one or more baseline signatures. For example, a step 54 a plurality of baseline signatures may be retrieved, each baseline signature corresponding to a particular operating characteristic of the fluid pump 14. More particularly, one baseline signature may correspond to normal pump operation, another baseline signature may correspond to bearing failure, another baseline signature may correspond to impeller damage, etc. Additionally, the one or more baseline signatures may correspond to the same condition, but at different levels of progression, e.g., slight bearing wear, heavy bearing wear, etc. The characteristic signature of the pump 14 can be compared to the one or more of the baseline signatures to

determine if there is a correspondence in the respective signatures. If a correspondence is found, then the correspondence can be used to make a prediction on a present or future operational state of the fluid pump 14. As will be appreciated, as the number of signatures collected over time increases the data comparison and prediction results improve.

Next at step 66 it is determined if any corrections to the baseline signatures are desired. It may be desirable to correct or otherwise update the baseline signatures, for example, to more accurately reflect the environment in which the pump 14 is operating. More specifically, when the system is initially put into operation the baseline signatures may be generic signatures for different types of operating states. In this regard, the baseline signatures do not take into account the affect the specific operating environment has on the characteristic signature of the pump 14 (e.g., a hydraulic system environment may produce different operating characteristics from a cooling system environment). By updating the baseline signatures during use of the pump in its intended environment, normal events that otherwise may suggest a failure/impending failure/anomaly can be added to the generic baseline signature to produce a custom baseline signature.

If at step 66 the baseline signature will not be revised, the method moves back to step 50 and repeats. However, if at step 66 the baseline signatures will be revised, then at step 68 it is determined if the characteristic signature falls within a prescribed tolerance or “window” of the generic baseline signature. By introducing a tolerance check, characteristic signatures that have significant deviations from the baseline signature can be discarded to prevent the baseline signature from being changed by bad data. If the characteristic signature is not

within the prescribed tolerance of the baseline signature, the method moves back to step 50 and repeats. If, however, the characteristic signature is within a prescribed tolerance of the baseline signature, then the method moves to step 70 where data corresponding to the characteristic signature is recorded. Such data, for example, may be the individual data points that define the characteristic signature.

Next at step 72 additional data may be recorded with the individual data points of the characteristic signature. The additional data may be stored with the raw signature data. Such additional data can include data obtained from other sensors, such as data corresponding to at least one of fluid temperature, case pressure, swashplate angle, fluid viscosity, fluid density, fluid dielectric constant, fluid inlet pressure or fluid outlet pressure.

The data obtained during operation of the fluid pump 14 and/or the additional data may be recorded to a storage location. The storage location may be local memory of the controller 22, or it may be stored in a location remote from the controller 22, e.g., in a server communicatively coupled to the controller and/or the cloud, and communicated to the remote location via a wired or wireless communication link.

At step 74 the recorded data is used to augment the baseline signature. In this regard, data points for the characteristic signature and data points for the baseline signature may be averaged to provide revised data points, thereby forming a revised baseline signature. The averaging process, for example, may be a weighted or non-weighted average. While an averaging methodology is described, it should be appreciated that other methodologies may be used to revise the baseline signature without departing from the scope of the invention.

For example, known Fast-Fourier Transform (FFT) analysis, t-test and/or other 6-sigma tools may be used to revise the baseline signature.

Referring now to Fig. 6 illustrated is an exemplary controller 22 that can execute at least portions of the method illustrated in Fig. 5. The controller 22 includes a processor 100 or the like. In one embodiment the processor is a microprocessor that executes code, while in another embodiment the processor may be an application specific integrated circuit (ASIC) configured to carry out the method of Fig. 5. Memory 102 may be communicatively coupled to the processor via bus 104. The memory 102 may include volatile memory and/or non-volatile memory. In one embodiment, the memory 102 stores instructions that are executable by the processor 100 to carry out the method of Fig. 5.

An input/output (I/O) module 106 is communicatively coupled to the processor 100 and memory 102 via bus 104. The I/O module 106 provides a means for outputting data from the controller 22 to external devices, and for inputting data from external devices to the controller 22. The I/O module 106 may include one or more of analog inputs, analog outputs, digital inputs, digital outputs, serial communications, etc. A power supply 108 receives power from a power source and converts the power into a form usable by the controller 22. For example, the power supply 100 may receive a 115VAC input, and provide 12VDC and 5VDC regulated outputs.

Referring now to Fig. 7A, illustrated is an exemplary means for storing one or more characteristic signatures and/or baseline signatures in accordance with the present disclosure. The exemplary storage means is illustrated as a simple database 110 having a row and column format. It will be appreciated,

however, that any conventional methodology for storing a plurality of data may be used without departing from the scope of the invention.

The exemplary database 110 (e.g., a historian that stores streams of data) includes a plurality of rows 112, each row corresponding to one signature. Thus, for example, a first row may store acoustic and/or vibration data corresponding to normal operation of the fluid pump (Normal Sig), a second row may store acoustic and/or vibration data corresponding to bearing failure of the fluid pump (Bearing Sig), a third row may store acoustic and/or vibration corresponding to reciprocating piston issues (Reciprocating Piston Sig), e.g., a piston sticking, a fourth row may correspond to high/low pressures, and so on. While the data is shown as a chart, the data may be displayed as a waveform to provide a visual indication of the pump operating conditions.

The exemplary database 110 also includes a plurality of columns 114, each column corresponding to a particular data entry. For example, collected signature data may be stored based on a time stamp provided to each data point of the signature. In this regard, time (t) may begin at 0 (t=0), which corresponds to the moment at which collection of the data is initiated. Subsequent data points then may be provided with a time stamp relative to t=0 based on a sampling period used to collect the data, and stored in the column corresponding to the time stamp. The number of data points stored for each signature as well as the number of signatures is limited only by the hardware of the storage medium (e.g., processing power and physical memory).

The exemplary database may be multidimensional. For example, and with reference to Fig. 7B, the database may have a first dimension 116 corresponding to acoustic and/or vibration data, a second dimension 118

corresponding to bearing temperature, a third dimension 120 corresponding to pump pressure, and so on. The second and third dimension may be correlated to the signature data such that when a particular signature is stored in/retrieved from the library, other "auxiliary" data corresponding to that signature may also be stored/retrieved. Alternatively, each dimension may correspond to different applications, e.g., a hydraulic pump, a cooling pump, a fuel pump, etc.

The system and method in accordance with the present disclosure has numerous applications. For example, characteristic signature data from the fluid pump can be used to resolve warranty issues. More particularly, by analyzing the characteristic signature from the fluid pump it may be determined that a viscosity of the lubricant used with the fluid pump was or was not within a specified range, the wrong type of lubricant was used with the fluid pump, or the lubricant was contaminated (e.g., water in the lubricant). For example, operating temperatures and/or a measured dielectric constant of the lubricant can be used to determine if improper viscosity lubricant was used. If it is determined improper/incorrect lubricant was used in the pump, then warranty coverage may be denied. The characteristic data may also identify other improper use of the fluid pump, such as running the pump outside specified operating parameters, including excessive pressure, excessive speed, excessive temperature, etc.

Further, the characteristic data can be used to determine if the fluid pump is over-designed and/or if certain features are not used. More particularly, if the design tolerance capability of the fluid pump is wide in comparison to the pressure the pump typically sees during normal use, then it may be possible to reduce component thickness in the pressure envelope. For example, the range of pressures and/or the number of pressures spikes subjected to the pump can

be used to evaluate the pump design (e.g., is the pump excessively robust for the typical use such that less material can be used to construct the pump and maintain satisfactory performance). Should features of the pump be determined to be over-designed and/or not used, the pump can be cost reduced, e.g., by simplifying the design and/or removing unused features. In this regard, new tooling may be designed that reduces casing weight and size, thereby reducing cost. Conversely, if the characteristic data indicates that the pump is subject to conditions at the limit of design capability, then the pump design may be strengthened and improved to avoid failure, which can avoid warranty issues.

Other data also may be analyzed to cost reduce and/or enhance the pump design. For example, some pumps may include an integrated hydraulic circuit. Measuring signature characteristics of the circuit may provide data that indicates which sections of the circuit are experiencing certain conditions and how often they are experiencing the conditions. Such data then can be used to simplify the circuit and/or add features to the circuit.

Other benefits include identification of components and/or applications that require more-frequent/less-frequent maintenance intervals and/or failures unrelated to the pump itself. For example, diesel engine injector failure can induce torsional vibrations that could be damaging to the pump. Such torsional vibrations can be detected in the characteristic signature and used to identify a problem lies outside the pump itself, e.g., with the diesel engine.

Although the invention has been shown and described with respect to a certain embodiment or embodiments, it is obvious that equivalent alterations and modifications will occur to others skilled in the art upon the reading and understanding of this specification and the annexed drawings. In particular

regard to the various functions performed by the above described elements (components, assemblies, devices, compositions, etc.), the terms (including a reference to a "means") used to describe such elements are intended to correspond, unless otherwise indicated, to any element which performs the specified function of the described element (i.e., that is functionally equivalent), even though not structurally equivalent to the disclosed structure which performs the function in the herein illustrated exemplary embodiment or embodiments of the invention. In addition, while a particular feature of the invention may have been described above with respect to only one or more of several illustrated embodiments, such feature may be combined with one or more other features of the other embodiments, as may be desired and advantageous for any given or particular application.

Claims

What is claimed is:

1. A method for predicting an operational status of a fluid machine, the method comprising:

obtaining at least one characteristic signature of the fluid machine during operation of the fluid machine;

comparing the at least one characteristic signature to a plurality of baseline signatures stored in a library of baseline signatures, each baseline signature characteristic of a prescribed operating condition of the fluid machine; and

predicting an operation state of the fluid machine based on the comparison.

2. The method according to claim 1, wherein the characteristic signature comprises at least one of a vibration signature or an acoustic signature.

3. The method according to any one of claims 1-2, further comprising:

periodically storing the characteristic signature of the fluid machine obtained during machine operation to form a plurality of characteristic signatures corresponding to operation of the machine in a specific application; and

using the plurality of characteristic signatures to revise at least one baseline signature of the plurality of baseline signatures.

4. The method according to claim 3, wherein periodically storing the characteristic signature includes periodically storing at least one other characteristic of the fluid machine.

5. The method according to claim 4, wherein the at least one other characteristic of the fluid machine is a machine speed, fluid flow through the machine, or a torque applied to the machine.

6. The method according to claim 4, wherein the at least one other characteristic comprises at least one of fluid temperature, case pressure, swashplate angle, fluid viscosity, fluid density, fluid dielectric constant, fluid inlet pressure or fluid outlet pressure.

7. The method according to any one of claims 1-6, wherein obtaining the characteristic signature of the fluid machine during operation comprises obtaining the characteristic signature during an initial test of the fluid machine.

8. The method according to claim 7, comprising ending the initial test upon the characteristic signature corresponding to a prescribed baseline signature of the plurality of baseline signatures.

9. The method according to any one of claims 7-8, wherein the initial test comprises a break-in test of the fluid machine.

10. The method according to any one of claims 1-9, wherein predicting the operation state comprises predicting an operation state corresponding to at least one of an impending failure, performance degradation or normal operation.

11. The method according to any one of claims 1-10, wherein obtaining the characteristic signature includes using at least one sensor configured to obtain vibration data from the fluid machine or acoustic data from the machine, and producing a characteristic signature based on the obtained vibration data or acoustic data.

12. The method according to any one of claims 1-11, wherein predicting an operation state of the fluid machine includes predicting an operation state of a component of the fluid machine.

13. The method according to claim 12, wherein the component comprises a bearing, a reciprocating piston, a rotating assembly or a pressure chamber.

14. The method according to any one of claims 1-13, wherein the fluid machine is at least one of a vane machine, a gear machine, a piston machine or a gerotor machine.

15. A controller for predicting a change in operational status of a fluid machine, the controller comprising:

a processor and memory; and

logic stored in memory and executable by the processor, the logic including logic configured to cause the processor to execute the method according to any one of claims 1-14.

16. The method according to any one of claims 1-15, wherein predicting an operation state of the fluid machine includes determining the fluid machine has been operated outside prescribed operating conditions based on the comparison.

17. The method according to any one of claims 1-16, wherein predicting an operation state of the fluid machine includes determining a maintenance schedule of the fluid machine based on the comparison.

18. The method according to any one of claims 1-17, further comprising cost-reducing the fluid machine based on the comparison.

19. The method according to claim 18, wherein cost reducing the fluid machine includes revising a design of the fluid machine.

20. The method according to any one of claims 1-19, further comprising enhancing a design of the fluid machine based on the comparison.

21. A fluid pumping system, comprising

a fluid machine;

a sensor operatively coupled to the fluid machine, the sensor configured to obtain at least one of vibration data or acoustic data from the fluid machine; and

a controller communicatively coupled to the sensor, the controller including

logic configured to obtain at least one of vibration data or acoustic data from the sensor,

logic configured to produce a characteristic signature for the machine based on the vibration data or the acoustic data,

logic configured to compare the characteristic signature to a plurality of baseline signatures stored in a library of baseline signatures, each baseline signature characteristic of a prescribed operating condition of the fluid machine, and

logic configured to predict an operation state of the fluid machine based on the comparison.

22. The fluid pumping system according to claim 21, wherein the controller includes:

logic configured to periodically store the characteristic signature of the fluid machine obtained during machine operation to form a plurality of characteristic signatures corresponding to operation of the machine in a specific application; and

logic configured to use the plurality of characteristic signatures to revise at least one baseline signature of the plurality of baseline signatures.

23. The fluid pumping system according to claim 22, wherein the logic configured to periodically store characteristic signatures includes logic configured to periodically store at least one other characteristic of the fluid machine.

24. The fluid pumping system according to claim 23, further comprising a second sensor configured to obtain data corresponding to at least one of fluid temperature, case pressure, case flow, machine speed, swashplate angle, fluid viscosity, fluid density, fluid dielectric constant, fluid inlet pressure or fluid outlet pressure, and the controller includes logic configured to store the data from the second sensor with the characteristic signature.

25. The fluid pumping system according to any one of claims 21-24, wherein the logic configured to predict an operation state of the fluid machine includes logic configured to predict an operation state of a component of the fluid machine.

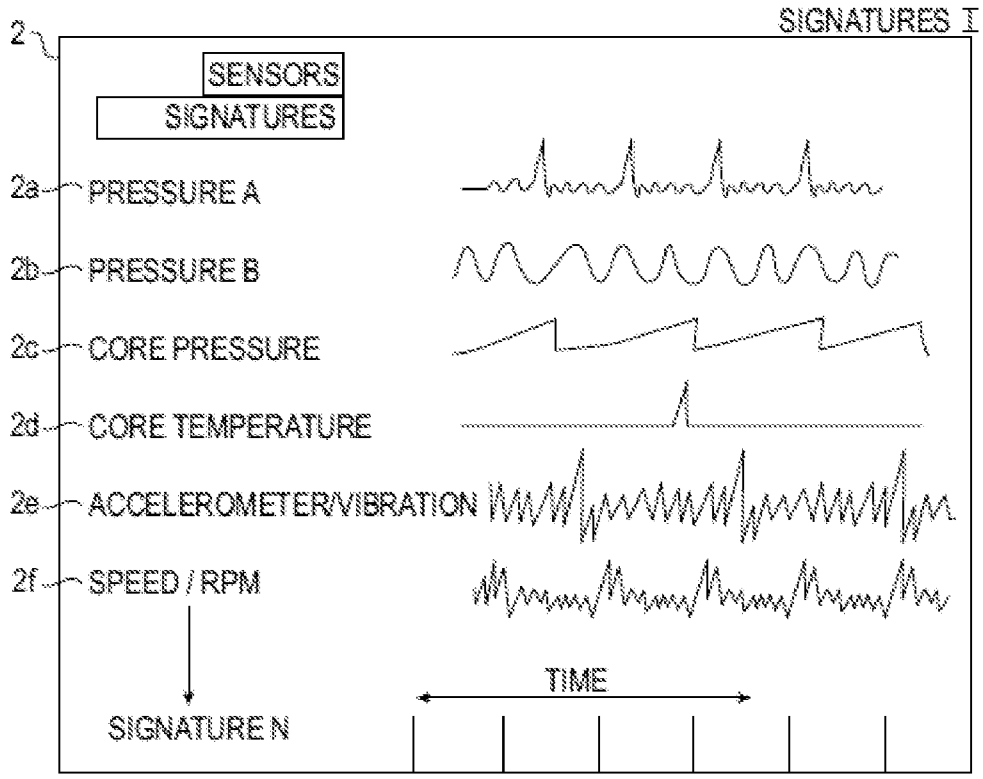

FIG. 1A

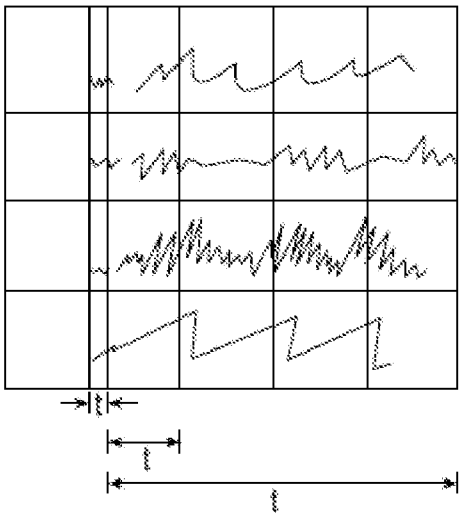

FIG. 1B

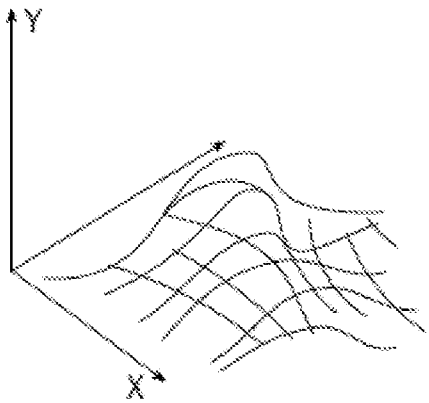

FIG. 1C

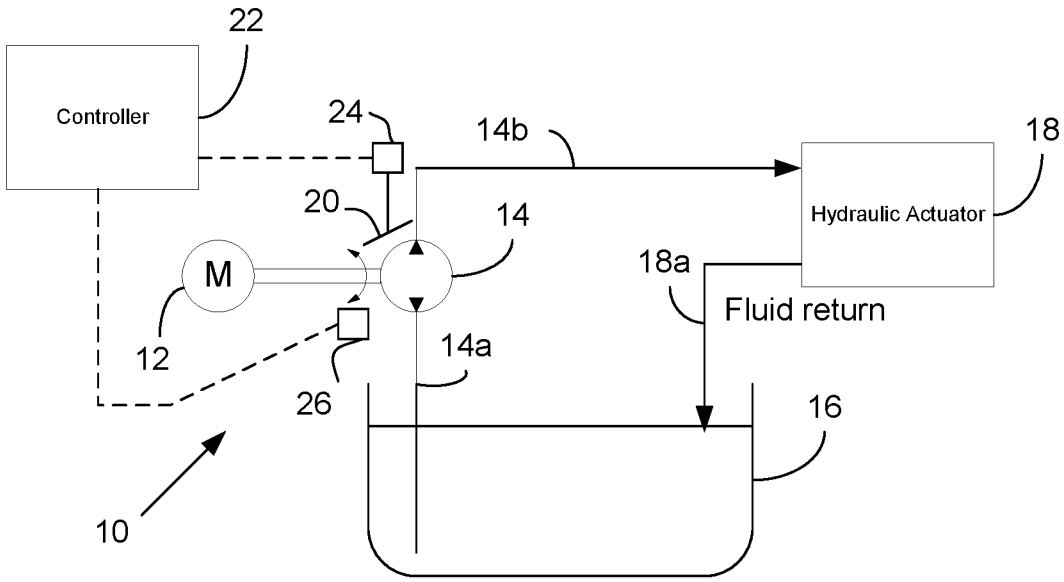
22
Controller
24
14b
18
Hydraulic Actuator
20
14
M
18a
Fluid return
12
14a
26
16
10

FIG. 2

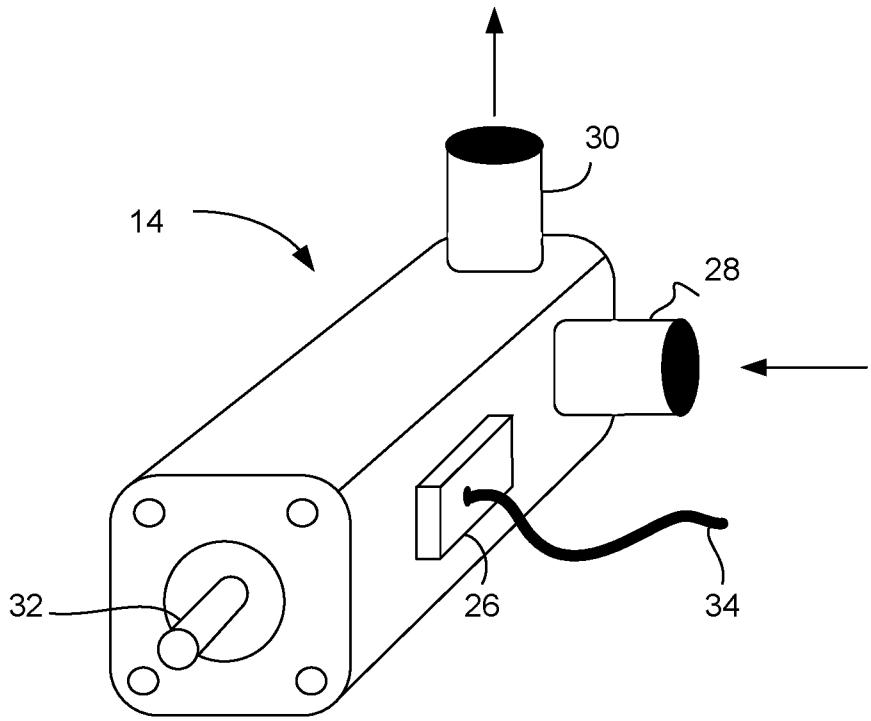
30
14
28
32
26
34

FIG. 3

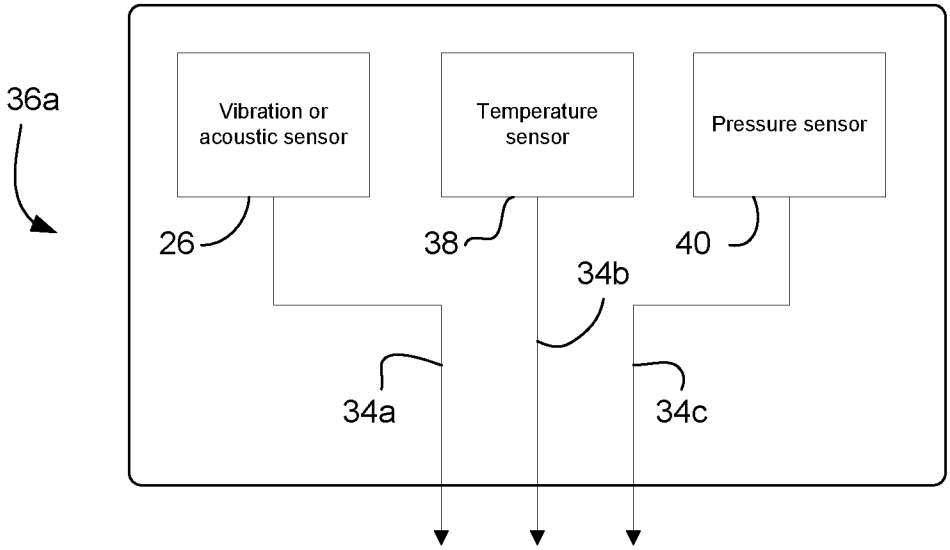
36a
Vibration or acoustic sensor
Temperature sensor
Pressure sensor
26
38
40
34b
34a
34c

FIG. 4A

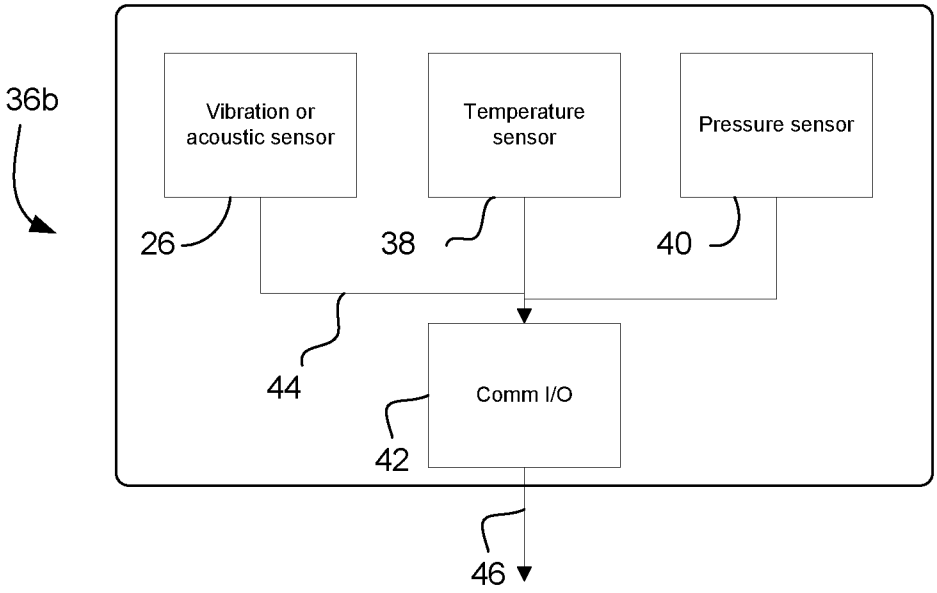
36b
Vibration or acoustic sensor
Temperature sensor
Pressure sensor
26
38
40
44
Comm I/O
42
46

FIG. 4B

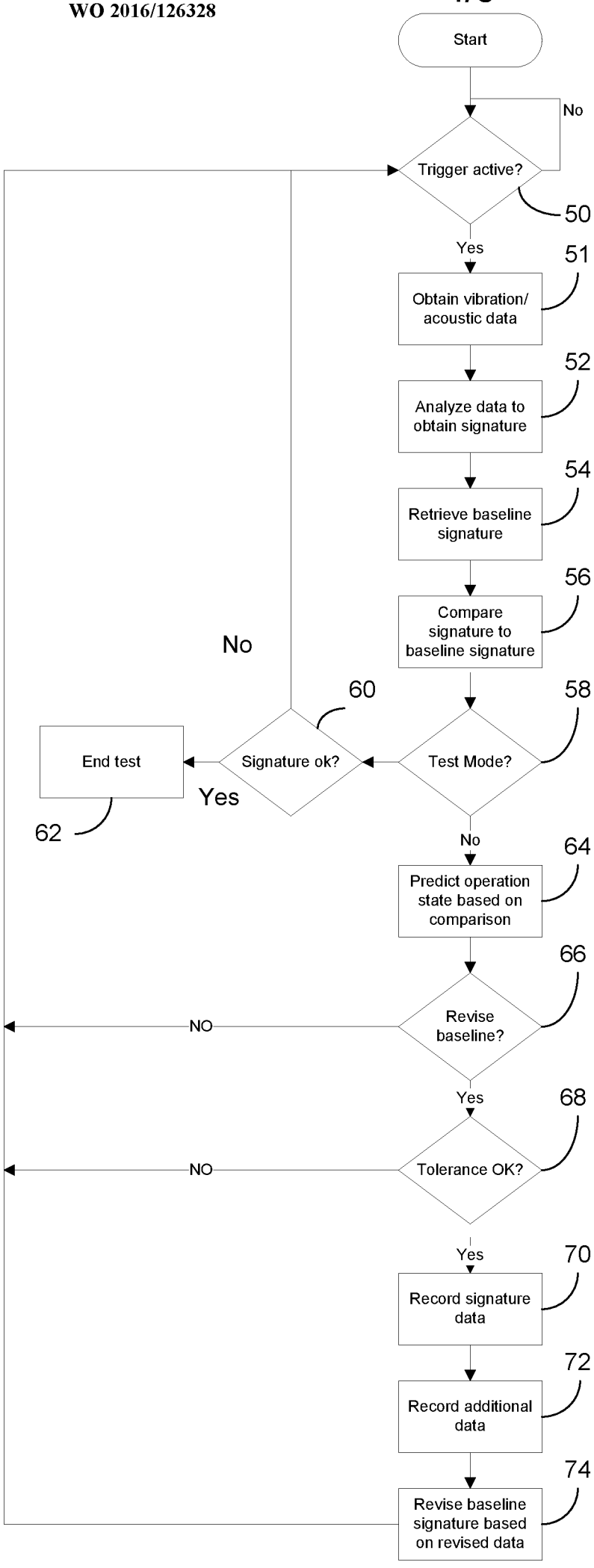
Start
No
Trigger active?
50
Yes
51
Obtain vibration/ acoustic data
52
Analyze data to obtain signature
54
Retrieve baseline signature
56
Compare signature to baseline signature
No
60
58
End test
Signature ok?
Test Mode?
Yes
62
No
64
Predict operation state based on comparison
66
Revise baseline?
NO
Yes
68
Tolerance OK?
NO
Yes
70
Record signature data
72
Record additional data
74
Revise baseline signature based on revised data

FIG. 5

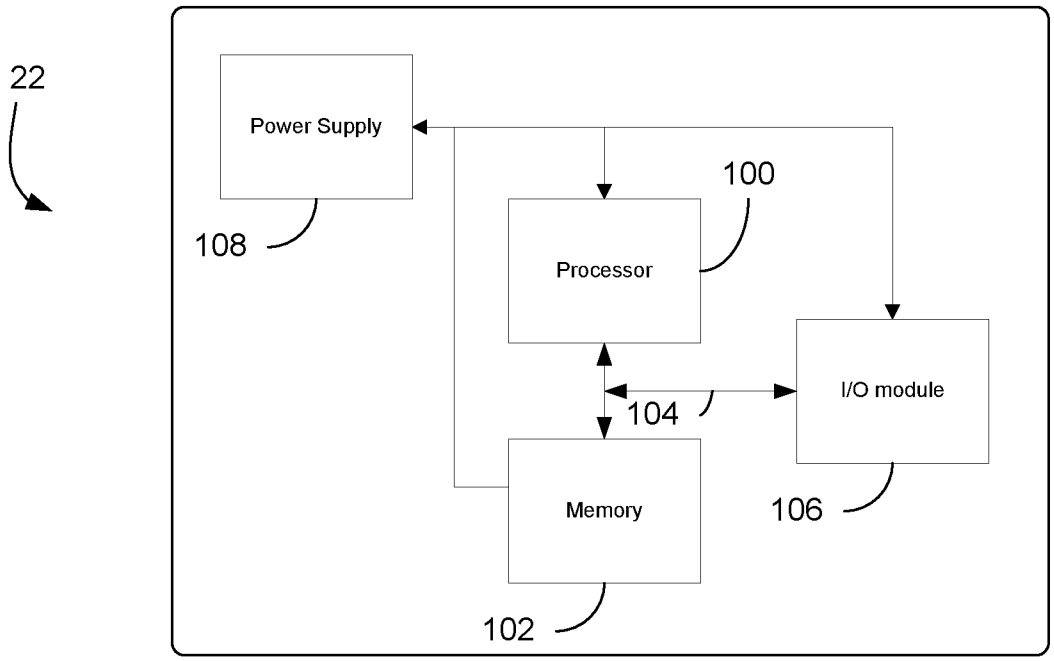
22
Power Supply
108
100
Processor
I/O module
104
Memory
106
102

FIG. 6

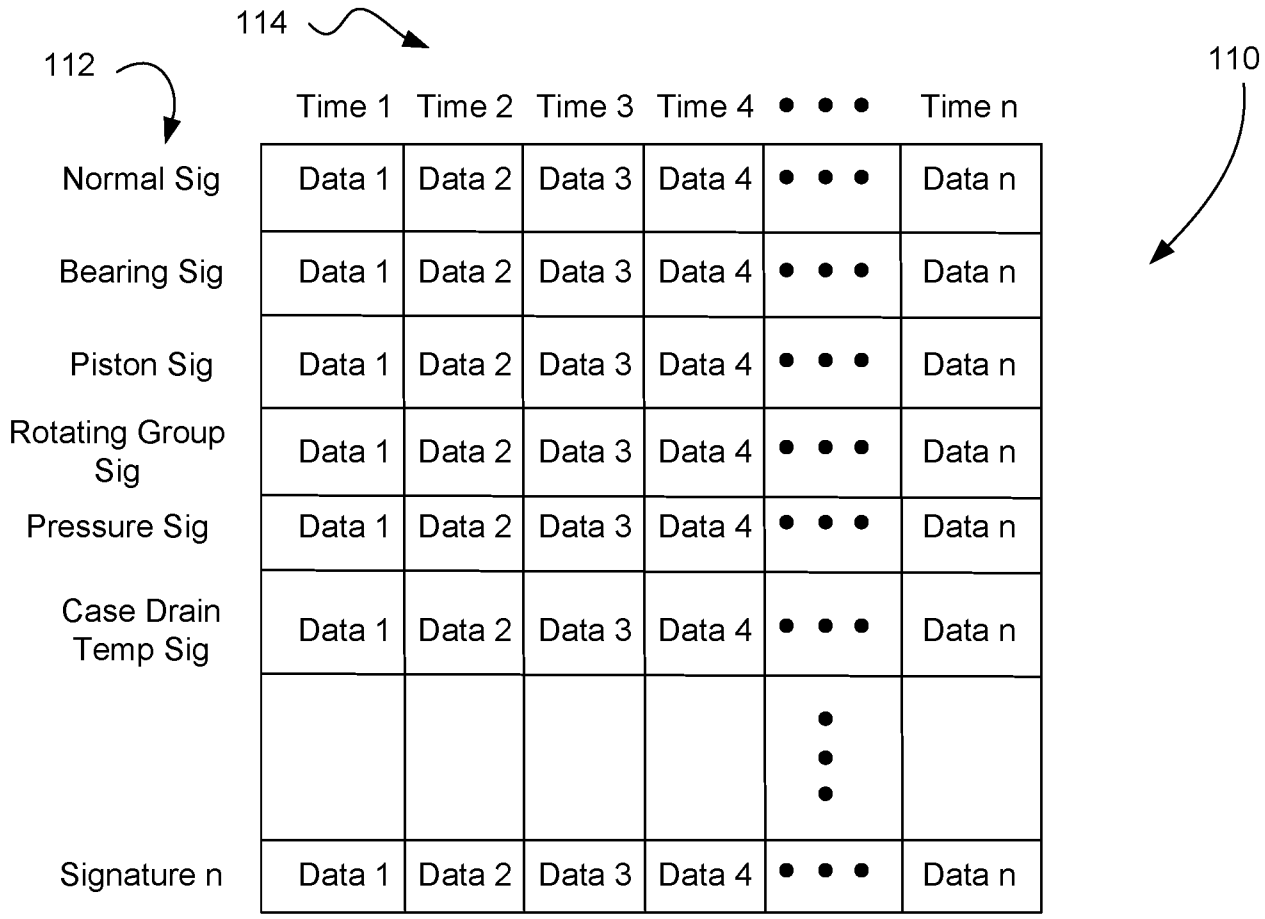
114
112
110
Time 1
Time 2
Time 3
Time 4
Time n
Normal Sig
Bearing Sig
Piston Sig
Rotating Group Sig
Pressure Sig
Case Drain Temp Sig
Signature n
Data 1
Data 2
Data 3
Data 4
Data n

FIG. 7A

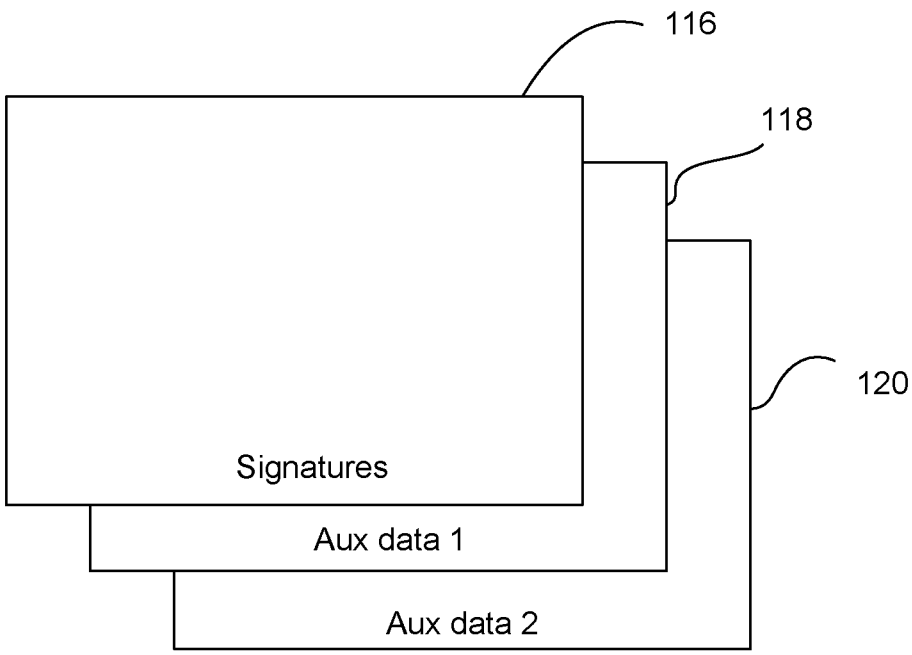
116
118
120
Signatures
Aux data 1
Aux data 2

FIG. 7B

INTERNATIONAL SEARCH REPORT

International application No
PCT/US2015/065166

A. CLASSIFICATION OF SUBJECT MATTER
INV. F04B51/00 F04C14/28 F04D15/00 G01M13/02
ADD.

According to International Patent Classification (IPC) or to both national classification and IPC

B. FIELDS SEARCHED

Minimum documentation searched (classification system followed by classification symbols)
F04B F04C F04D G01M

Documentation searched other than minimum documentation to the extent that such documents are included in the fields searched

Electronic data base consulted during the international search (name of data base and, where practicable, search terms used)
EPO-Internal, WPI Data

C. DOCUMENTS CONSIDERED TO BE RELEVANT

Category*	Citation of document, with indication, where appropriate, of the relevant passages	Relevant to claim No.
X	DE 10 2007 034344 A1 (BOSCH GMBH ROBERT [DE]) 31 January 2008 (2008-01-31) claim 1	1-25
X	US 2012/141301 A1 (VAN DER SPEK ALEX [NL] ET AL) 7 June 2012 (2012-06-07) claim 1	1-25
X	DE 38 28 933 A1 (TEVES GMBH ALFRED [DE]) 1 March 1990 (1990-03-01) claims 1-3	1-25
X	WO 2014/143708 A1 (FRANKLIN ELECTRIC CO INC [US]) 18 September 2014 (2014-09-18) claim 1	1-25
X	US 2014/107885 A1 (HAGEN ERIC L [US] ET AL) 17 April 2014 (2014-04-17) paragraphs [0016], [0018], [0027]	1-25

☐ Further documents are listed in the continuation of Box C.

☒ See patent family annex.

* Special categories of cited documents :

"A" document defining the general state of the art which is not considered to be of particular relevance

"E" earlier application or patent but published on or after the international filing date

"L" document which may throw doubts on priority claim(s) or which is cited to establish the publication date of another citation or other special reason (as specified)

"O" document referring to an oral disclosure, use, exhibition or other means

"P" document published prior to the international filing date but later than the priority date claimed

"T" later document published after the international filing date or priority date and not in conflict with the application but cited to understand the principle or theory underlying the invention

"X" document of particular relevance; the claimed invention cannot be considered novel or cannot be considered to involve an inventive step when the document is taken alone

"Y" document of particular relevance; the claimed invention cannot be considered to involve an inventive step when the document is combined with one or more other such documents, such combination being obvious to a person skilled in the art

"&" document member of the same patent family

Date of the actual completion of the international search	Date of mailing of the international search report
26 February 2016	08/03/2016

Name and mailing address of the ISA/	Authorized officer
European Patent Office, P.B. 5818 Patentlaan 2 NL - 2280 HV Rijswijk Tel. (+31-70) 340-2040, Fax: (+31-70) 340-3016	Olona Laglera, C

1

INTERNATIONAL SEARCH REPORT

Information on patent family members

International application No
PCT/US2015/065166

Patent document cited in search report	Publication date	Patent family member(s)	Publication date
DE 102007034344 A1	31-01-2008	DE 102007034344 A1	31-01-2008
		WO 2008012070 A2	31-01-2008
US 2012141301 A1	07-06-2012	AU 2010260026 A1	19-01-2012
		CA 2765155 A1	16-12-2010
		EP 2440784 A1	18-04-2012
		US 2012141301 A1	07-06-2012
		WO 2010144782 A1	16-12-2010
DE 3828933 A1	01-03-1990	NONE	
WO 2014143708 A1	18-09-2014	AU 2013204013 A1	02-10-2014
		US 2016003242 A1	07-01-2016
		WO 2014143708 A1	18-09-2014
US 2014107885 A1	17-04-2014	US 2014107885 A1	17-04-2014
		WO 2014058957 A1	17-04-2014