(12) INTERNATIONAL APPLICATION PUBLISHED UNDER THE PATENT COOPERATION TREATY (PCT)

(19) World Intellectual Property Organization
International Bureau

(43) International Publication Date
26 June 2025 (26.06.2025)

WIPO | PCT

(10) International Publication Number
WO 2025/136359 A1

(51) International Patent Classification:
A61B 1/00 (2006.01) *A61M 25/01* (2006.01)
A61B 1/018 (2006.01) *A61M 25/10* (2013.01)

(21) International Application Number:
PCT/US2023/084799

(22) International Filing Date:
19 December 2023 (19.12.2023)

(25) Filing Language: English

(26) Publication Language: English

(71) Applicant: **BARD PERIPHERAL VASCULAR, INC.** [US/US]; IP Law Group, 1 Becton Drive, M/C 110 IP Ops, Franklin Lakes, New Jersey 07417 (US).

(72) Inventors: **CARTRIGHT, Matthew**; c/o BARD PERIPHERAL VASCULAR, INC., IP Law Group, 1 Becton Drive, M/C 110 IP Ops, Franklin Lakes, New Jersey 07417 (US). **FORD, Summer L.**; c/o BARD PERIPHERAL VASCULAR, INC., IP Law Group, 1 Becton Drive, M/C 110 IP Ops, Franklin Lakes, New Jersey 07417 (US). **MESSINA, Genevieve**; c/o BARD PERIPHERAL VASCULAR, INC., IP Law Group, 1 Becton Drive, M/C 110 IP Ops, Franklin Lakes, New Jersey 07417 (US). **PARMENTIER, William E.**; c/o BARD PERIPHERAL VASCULAR, INC., IP Law Group, 1 Becton Drive, M/C 110 IP Ops, Franklin Lakes, New Jersey 07417 (US). **TEMPLE, Kyra**; c/o BARD PERIPHERAL VASCULAR, INC., IP Law Group, 1 Becton Drive, M/C 110 IP Ops, Franklin Lakes, New Jersey 07417 (US). **ZHENG, Peng**; c/o BARD PERIPHERAL VASCULAR, INC., IP Law Group, 1 Becton Drive, M/C 110 IP Ops, Franklin Lakes, New Jersey 07417 (US).

(74) Agent: **DERBYSHIRE, Zachary** et al.; Dinsmore & Shohl LLP, Fifth Third Center, 1 S Main St., Suite 1300, Dayton, Ohio 45402 (US).

(81) Designated States *(unless otherwise indicated, for every kind of national protection available)*: AE, AG, AL, AM, AO, AT, AU, AZ, BA, BB, BG, BH, BN, BR, BW, BY, BZ, CA, CH, CL, CN, CO, CR, CU, CV, CZ, DE, DJ, DK, DM, DO, DZ, EC, EE, EG, ES, FI, GB, GD, GE, GH, GM, GT,

(54) Title: ENDOBRONCHIAL DRUG COATED BALLOON

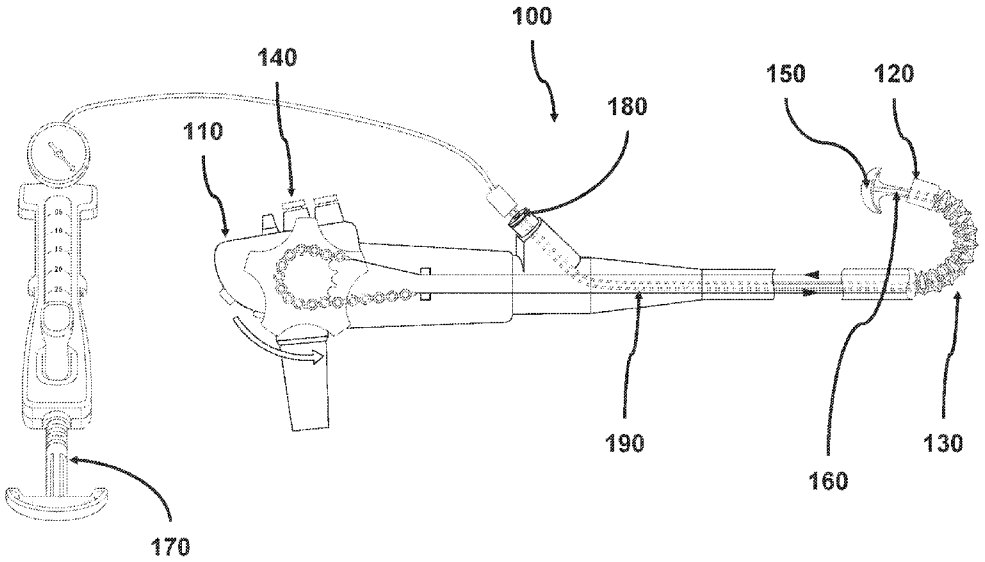

FIG. 1

(57) Abstract: The present disclosure relates to a scoping device equipped with an inflatable balloon. Connected to the exterior of the balloon are one or more cables that are threaded through at least a part of the scoping device and are available to a user to apply a pulling force thereon. Such force can then allow the balloon to rotate or move across a desired area of tissue within a subject. The presence of a coating layer on the exterior of the balloon allows for the same to be site-specifically delivered. The present device therefore allows for site specific delivery of one or more therapeutics through a scoping device.

WO 2025/136359 A1

[Continued on next page]

HN, HR, HU, ID, IL, IN, IQ, IR, IS, IT, JM, JO, JP, KE, KG, KH, KN, KP, KR, KW, KZ, LA, LC, LK, LR, LS, LU, LY, MA, MD, MG, MK, MN, MU, MW, MX, MY, MZ, NA, NG, NI, NO, NZ, OM, PA, PE, PG, PH, PL, PT, QA, RO, RS, RU, RW, SA, SC, SD, SE, SG, SK, SL, ST, SV, SY, TH, TJ, TM, TN, TR, TT, TZ, UA, UG, US, UZ, VC, VN, WS, ZA, ZM, ZW.

(84) **Designated States** *(unless otherwise indicated, for every kind of regional protection available)*: ARIPO (BW, CV, GH, GM, KE, LR, LS, MW, MZ, NA, RW, SC, SD, SL, ST, SZ, TZ, UG, ZM, ZW), Eurasian (AM, AZ, BY, KG, KZ, RU, TJ, TM), European (AL, AT, BE, BG, CH, CY, CZ, DE, DK, EE, ES, FI, FR, GB, GR, HR, HU, IE, IS, IT, LT, LU, LV, MC, ME, MK, MT, NL, NO, PL, PT, RO, RS, SE, SI, SK, SM, TR), OAPI (BF, BJ, CF, CG, CI, CM, GA, GN, GQ, GW, KM, ML, MR, NE, SN, TD, TG).

Declarations under Rule 4.17:

— *as to applicant's entitlement to apply for and be granted a patent (Rule 4.17(ii))*

Published:

— *with international search report (Art. 21(3))*

ENDOBRONCHIAL DRUG COATED BALLOON

Field of the Invention

[0001] This disclosure relates to actuable balloons at a distal end of an endobronchial scope with a drug coating thereon to improve site-specific delivery and to methods of the use of the same.

Background

[0002] Site-specific drug delivery to a subject's lungs faces many challenges due to the physiology of the organ. The upper airways are relatively rigid and the branching and narrowing as the passages go deeper make drug delivery into the lungs a daunting proposition. Formerly, a caregiver can administer a drug at the top of the airway and treat the entire lung or in extreme instances go through the chest or back to pierce the lung. The advent of miniaturized cameras and of articulable fibers has improved things to a certain extent, but a subject's physiology can make it difficult to accurately ensure a target area receives the drug. For example, a tumor or growth in the lung tissue can present as a protrusion. A user can likely access the protrusion from one side, but the rear portion can be beyond reachable due to the nature of inserting a scop. Thus an improvement in drug delivery in the lung is needed.

Brief Description of the Drawings

[0003] FIG. 1 shows a side view of one aspect of the device of the present disclosure.

[0004] FIG. 2 shows an isolated shape of one aspect of the balloon of the present disclosure.

[0005] FIG. 3 shows a further isolated shape of one aspect of the balloon of the present disclosure

[0006] FIG. 4 shows a third isolated shape of one aspect of the balloon of the present disclosure.

[0007] FIG. 5 shows a cross-sectional side view of an isolated balloon of the present disclosure in contact with tissue.

[0008] FIG. 6 shows one embodiment of a cross-sectional view of the scoping section of the bronchioscope.

[0009] FIG. 7 shows a further embodiment of a cross-sectional view of the scoping section of the bronchioscope.

[0010] FIG. 8 shows an enlarged portion side view of deployment of the balloon.

[0011] FIG. 9 shows an aspect of angulation of the balloon.

[0012] FIG. 10 shows a further aspect of angulation of the balloon.

[0013] FIG. 11 shows an even further aspect of angulation of the balloon.

Detailed Description

[0014] The present disclosure relates to a drug-coated balloon at a distal end of a scoping device, such as a bronchioscope. The balloon is pre-coated with a drug coating layer and is designed to deposit the drug coating on lung tissue within the airways.

[0015] The structure of a scoping device, such as a bronchioscope, is generally understood to include a proximal body and a distal scoping section, wherein the body of the device includes controls that are operably connected to the scoping section, frequently through one or more wires, that allow a user to cause the scoping section to bend at one or more points along the scoping section that allows the scoping section as a whole to navigate within organs and anatomical spaces, particularly those with complex geometries.

[0016] In some aspects, the balloon is operably connected to an inflation means, such that a user can utilize a bronchioscope as usual to navigate a distal end to a desired position. Once in place within a subject's lungs, the operator can activate the inflation means and cause the balloon to inflate *in situ* within the subject's lung tissue.

[0017] It is understood that a bronchioscope includes angulation means such that a distal section can curve. In some aspects, the distal section can include one or more pivot points or pins that allow the section to curve. In some aspects, angulation wires that extend from a user's access point, such as a knob or controller, to the distal section. In some aspects, the two or more angulation wires may be connected between a controller and the distal section to allow for further

angulation of the section. In some aspects, the distal section angulation wire(s) are threaded internally inside the body of the scope.

[0018] In aspects, the present disclosure includes an inflatable balloon at a distal end of a bronchoscope. As depicted herein, it is to be understood that the distal end refers to that end of a bronchoscope distal from the control end or distal from a user or the end that leads the scoping when in use. In some aspects, the inflatable balloon is operably connected to an inflation means, such that a user can inflate the balloon *in situ* within a subject. In some aspects, the inflation means may include a catheter placed within an opening of the balloon to allow for an inflation gas or fluid to enter the balloon and inflate *in situ*. In some aspects, the inflation means is operably connected to a gas or fluid source to allow a user to direct or control the entry thereof into and out of the balloon. In some aspects, the inflation means can be arranged to allow for the balloon to deflate. It will be appreciated that in some aspects, deflating the balloon may be desirable before trying to withdraw the distal end of the bronchoscope from a subject's airways.

[0019] In some aspects, the inflatable balloon is connected to an inflation means such as a pump. In some aspects, a catheter may connect the pump to a hole in the balloon to allow for the inflation thereof *in situ*. In some aspects, the pump may be operably connected to a pressure gauge to provide feedback to a user as to the pressure within the balloon during and while inflated. In some aspects, the catheter connecting the pump to the balloon may be threaded through or housed within the scope or a portion thereof. In some aspects, the scope may include a port at or in relative proximity to controls of the scope, such that a user can feed the inflatable balloon and catheter into the scope. In some aspects, the distal end of the scope may include a further port or hole such that the inflatable balloon can emerge prior to or during inflation. In some aspects, the distal end includes a port with an operable cover, such that a user can withdraw the cover or slide the cover to allow for the inflatable balloon to exit the scope *in situ*.

[0020] In some aspects, the inflatable balloon includes one or more cables attached directly or indirectly to a wall thereof. The cable(s) may be attached to an internal wall or to an external wall. The cables can be arranged such that they can be threaded along or inside the catheter, such that the cables can be pulled by a user. The cables may be connected operably to a control unit that allows a user to applying a pulling force thereto.

[0021] In some aspects, the inflatable balloon includes a cable attached to a point on the exterior surface thereof. Pulling on the cable by the user *in situ* can thereby cause the side of the balloon where the cable is attached to rotate or move in response to the applied force. In aspects where the balloon's exterior surface is in contact with the subject's tissue, the applied force can allow the balloon to roll or rotate across the tissue. In aspects, the drug coating on the surface of the balloon can therefore better deposit as the balloon is drawn by the cable(s) across the tissue.

[0022] Turning to FIG. 1, depicted is a side view partial cross-section of a bronchioscope **100**. Included are the proximal end **110** and the distal end **120** and the scoping section **130** that includes one or more points that allow the scoping section **130** to bend in response to a user operating controls **140** at the proximal end **110**. At the distal end **120** is an inflatable balloon **150** connected to a catheter **160** and an inflation means **170** (e.g. pump). The inflation means **170** can operate the inflation/deflation of the inflatable balloon **150** through a port **180** in the bronchioscope **100**. Also depicted are one or more cables **190** that connect parts of the inflatable balloon **150** to the controls **140** to allow a user to cause movement and/or angulation of the inflated inflatable balloon **150** *in situ*.

[0023] It will be appreciated that the inflatable balloon need not be limited in shape and that some shapes may be better suited to certain internal geometries, depending on the subject's particular needs. FIGs. 2, 3, and 4 set forth certain exemplary, and not limiting shapes. For example, FIG. 2 shows the inflatable balloon **150** and connected cable(s) **190**. The inflatable balloon **150** is in an almost 3D "U" shape or horseshoe shape, with the cables **190** connected to the sides of the inflatable balloon **150**, such that a pulling force applied to one cable **150** will move and/or angulate the inflated inflatable balloon **150**.

[0024] FIG. 3 shows the inflated inflatable balloon **150** in the shape of a mushroom cap. As with mushroom caps themselves, the shape need not be limited to a convex shape, but may also be plano-convex, sub-globular, umbrate-obtuse, bell-shaped, cone-shaped, kidney-shaped, conical, ovate, flat, and so forth. The cables **190** are connected to one or more points on the edge or side of the inflated inflatable balloon **150**.

[0025] FIG. 4 sets forth a further possible shape configuration for the inflatable balloon **150**. As depicted, the inflated inflatable balloon **150** can be segmented into leaflets or foils. As shown, the inflatable balloon **150** is a quatrefoil, though bifoil and trifoil are easily substituted shapes, as

are increasing numbers of foils or leaves, such as 5, 6, 7, or higher. Again, the cables **190** are connected to one or more points on the edge or side of the inflated inflatable balloon **150**.

[0026] FIG. 5 shows the inflatable balloon **150** in an angulated position such that the exterior surface **210** of the inflatable balloon **150** has a higher surface area contact with the tissue **220** of the subject *in situ*. The cable **190** on the as depicted right-side of the inflatable balloon **150** has had a pulling force applied to draw the same as depicted right-side of the balloon toward the user and thereby increasing surface are contact on the as-depicted left side with the tissue **220**.

[0027] FIGs. 6 and 7 show cross-sections of the scoping section of the bronchioscope. As shown in FIG. 6, the cable(s) **190** can run along the side of the catheter **160** within the scoping section. It will be appreciated that the cable(s) **190** in some aspects may be secured and/or adhered to the exterior of the catheter **160**. FIG. 7 shows an alternative arrangement of the scoping section wherein the catheter **160** and the cable(s) **190** are housed within isolated channels along the scoping section.

[0028] FIG. 8 depicts a side-view of the scoping section **130** with a cutaway and the distal end **120**. The cable(s) **190** emerge from the distal end **120** and connect to an exterior surface of the inflated inflatable balloon **150**. Also shown are the one or more points of rotation **230** by which the user can cause the scoping section **130** to bend or articulate *in situ*. Not depicted is the catheter that operably connects the inflation means to the inflatable balloon **150** to thereby allow a user to control the inflation status, as well as the internal pressure within.

[0029] It is a further aspect of the present disclosure that the inflatable balloon is coated in at least one coating layer, wherein the coating layer is provided such that when the balloon is inflated *in situ*, the coating layer can be deposited through contact onto the surface of a desired area of tissue. For example, the inflatable balloon may include one or more chemotherapeutic agents in the coating layer. The bronchoscope as disclosed herein can be maneuvered into a desired location within the subject and the balloon therein is inflated. The scope can optionally move after inflation. The inflated balloon can then be independently moved *in situ* through operation of the cables connected to one of more sides and/or edges of the balloon. Furthermore, the pressure of the balloon can be adjusted to achieve a desired degree of contact. For example, a lowered internal pressure in the inflated balloon may allow the exterior surface to draw and/or collapse over a desired area. Similarly, a higher internal pressure may stiffen the exterior surface of the balloon

and allow the exterior surface to roll across a desired area of tissue or rock back and forth as different forces are applied on the cables.

[0030] In some aspects, the inflatable balloon may require a single cable to allow a unilateral movement. It will be appreciated that two or more cables may be used to increase the mobility of the exterior surface across tissue surface(s) *in situ*. For example, two opposing cables will allow for a back-and-forth movement across the surface. FIGs. 9, 10, and 11 depict various combinations of forces that can be applied with a two cable system. It will be appreciated that adding in a third, fourth, or more number of cables about the exterior surface and/or edge of the balloon. Further, as shown in FIG. 11, the force applied does not need to be limited to a single cable at any point in time, but can be through multiple points of applied force, which can be of the same of differing amount in intensity or strength.

[0031] In aspects, the inflatable balloon is prepared with a coating layer. In some aspects, the coating layer may include a therapeutic. The therapeutic may be included in crystalline form, in amorphous form, or embedded within a microparticle, or combinations thereof. In aspects, the coating layer may include one or more of an excipient, a surfactant, a pharmaceutically acceptable carrier, a polymer, a vitamin, a mineral, a salt, or similar.

[0032] In some aspects, the coating layer may include a therapeutic for treatment of a lung condition. In some aspects, the condition may be a lung cancer or tumor thereof. In some aspects, the therapeutic may be selected to treat such, such as with abraxane, adagrasib, afatinib, everolimus, alectinib, pemetrexed, brigatinib, bevacizumab, amivantamab, capmatinib, cemiplimab, ceritinib, crizotinib, ramucirumab, dabrafenib, dacomitinib, docetaxel, doxorubicin, trastuzumab, entrectinib, erlotinib, mobocertinib, pralsetinib, gefitinib, gemcitabine, tremelimumab, ipilmumab, permbrolizumab, lorlatinib, sotorasib, trametinib, methotrexate, nectiumumab, nivolumab, osimertinib, paclitaxel, ramucirumab, selpercatinib, tepotinib, vinorelbine, or salts and/or combinations thereof.

[0033] In aspects, the therapeutic agent (s)need not be limited to a particular compound. In some aspects, and/or phosphodiesterase inhibitor drugs and/or anti-fibrosis drugs and/or kinase inhibitors and/or tyrosine kinase inhibitors and/or receptor tyrosine kinase inhibitors may be selected. Examples may include one or more of paclitaxel, rapamycin, daunorubicin, 5-fluorouracil, doxorubicin, sunitinib, sorafenib, irinotecan, bevasizumab, cetuxamab, biolimus

(biolimus A9), everolimus, zotarolimus, tacrolimus, dexamethasone, prednisolone, corticosterone, cisplatin, vinblastine, lidocaine, bupivacaine, bosutinib, ceritinib, crizotinib, gefitinib, ruxolitinib, imatinib, axitinib, nilotinib, trametinib, afatinib, ibrutinib, cabozantinib, imatinib, lenvatinib, sunitinib, regorafenib, sorafenib, vandetanib, dasatinib, pazopanib, triamciclone, tranilast, halofuginone, montelukast, zafirlukast, pirfenidone, Y27632, CA3, verteporfin, VGLL4 peptide, nintedanib, avapritinib, abemaciclib, erdafitinib, fedratinib, nilotinib, nintendanib, palbociclib, pemigatinib, xanthines, aminophylline, sildenafil, tadalafil, vardenafil, udenafil, avanafil, dipyridamole, quinazoline, paraxanthine, papaverine, mesembrenone, rolipram, ibudilast, piclamilast, luteolin, drotaverine, roflumilast, apremilast, crisaborole, inamrinone, milrinone, enoximone, anagrelide, cilostazol, pimobendan, erythro-9-(2-hydroxy-3-nonyl)adenine), (2-[(3,4-dimethoxyphenyl)methyl]-7-[(1R)-1-hydroxyethyl]-4-phenylbutyl]-5-methyl-imidazo[5,1-f][1,2,4]triazin-4(1H)-one), oxindole, (9-(6-phenyl-2-oxohex-3-yl)-2-(3,4-dimethoxybenzyl)-purin-6-one), 3-isobutyl-1-methylxanthine, pentoxifylline, theobromine, theophylline, resveratrol, quercetin, curcumin, chrysin, myricebendtin, luteolin, apigenin, anthrocyanin, genistein, epigallocatechin gallate, fisetin, astxanthin, tetrahydrocurcumin, imatinib, nintedanib, sorafenib, sunitinib, pazopanib, ROCK inhibitor (Y27632), YAP/TAZ inhibitor (CA3 and verteporfin), YAP/TAZ-TEAD interaction inhibitor (verteporfin, VGLL4 peptide), SRC inhibitor (dasatinib), durvalumab, pembrolizumab, cemiplimab, nivolumab, atezolizumab, ipilimumab, alectinib, brigatinib, ramucirumab, gelfitinib, necitumumab, larotrectinib, and combinations thereof.

[0034] In some aspects, the coating layer may include microparticles of therapeutic agent(s) and a bioabsorbable polymer. Microparticles may be prepared the evaporation of a solvent with a bioabsorbable/biodegradable polymer and at least one therapeutic therein. In some aspects, the solvent is of dichloromethane (DCM) or ethyl acetate (EtOAc). Polymers may include a network of a poly-glycolic acid (PGA) and a poly-L-lactic acid (PLLA). Other bioabsorbable polymers that can be utilized in combination or alone for the microparticles include polycaprolactone (PCL), poly-DL-lactic acid (PDLLA), poly(trimethylene carbonate) (PTMC), poly (ester amine)s (PEA), poly(para-dioxanone) (PPDO), poly-2-hydroxy butyrate (PHB), and co-polymers with various ratios thereof. In some aspects, the bioabsorbable polymer may include, either alone or in combination with other bioabsorbable polymers, a polymer combination of lactic acid and glycolic acid, poly-lactic-co-glycolic acid (PLGA). Those skilled in the art will appreciate that PLGA can

be of varying percentages of lactic acid and glycolic acid, wherein the higher the amount of lactide units, the longer the polymer can last *in situ* before degrading. Additional tunable properties with PLGA concern the molecular weight, with higher weights showing increased mechanical strength. In some aspects, the polymer microparticle is also loaded or embedded with an antioxidant, such as BHT.

[0035] In some aspects, the coating layer may include a polymer coating, such as a bioabsorbable polymer as set forth herein. In some aspects, the density of the therapeutic or polymer microparticle within the polymer coating is of from about 0.1 to 10 $\mu g/mm^2$. In certain aspects, the theapeutic or polymer microparticle is provided on the device in the polymer coating at a density of from about 0.5 to about 5 $\mu g/mm^2$. In some aspects, the dose density of the therapeutic in the coating and/or within each polymer microparticle can vary from about 0.1 to about 10 $\mu g/mm^2$, including about 0.2, 0.3, 0.4, 0.5, 0.6, 0.7, 0.8, 0.9, 1.0, 1.1, 1.2, 1.3, 1.4, 1.5, 1.6, 1.7, 1.8, 1.9, 2.0, 2.1, 2.2, 2.3, 2.4, 2.5, 2.6, 2.7, 2.8., 2.9, 3.0, 3.1, 3.2, 3.3, 3.4, 3.5, 3.6, 3.7, 3.8, 3.9, 4.0, 4.1, 4.2, 4.3, 4.4, 4.5, 4.6, 4.7, 4.8, 4.9, 5.0, 5.1, 5.2, 5.3, 5.4, 5.5, 5.6, 5.7, 5.8, 5.9, 6.0, 6.1, 6.2, 6.3, 6.4, 6.5, 6.6, 6.7, 6.8, 6.9, 7.0, 7.1, 7.2, 7.3, 7.4, 7.5, 7.6, 7.7, 7.8, 7.9, 8.0, 8.1, 8.2, 8.3, 8.4, 8.5, 8.6, 8.7, 8.8, 8.9, 9.0, 9.1, 9.2, 9.3, 9.4, 9.5, 9.6, 9.7, 9.8, and 9.9 $\mu g/mm^2$. In some aspects, the therapeutic dose density is of about 0.5 to about 5 $\mu g/mm^2$.

[0036] In some aspects, the concentration density of the therapeutic agent in the coating layer or within the polymer microparticle may be from 0.1 $\mu g/mm^2$ to 10 $\mu g/mm^2$, from 0.1 $\mu g/mm^2$ to 8 $\mu g/mm^2$, from 0.1 $\mu g/mm^2$ to 6 $\mu g/mm^2$, from 0.1 $\mu g/mm^2$ to 4 $\mu g/mm^2$, from 0.1 $\mu g/mm^2$ to 2 $\mu g/mm^2$, from 0.1 $\mu g/mm^2$ to 1 $\mu g/mm^2$, from 1 $\mu g/mm^2$ to 10 $\mu g/mm^2$, from 1 $\mu g/mm^2$ to 8 $\mu g/mm^2$, from 1 $\mu g/mm^2$ to 6 $\mu g/mm^2$, from 1 $\mu g/mm^2$ to 4 $\mu g/mm^2$, from 1 $\mu g/mm^2$ to 2 $\mu g/mm^2$, from 2 $\mu g/mm^2$ to 10 $\mu g/mm^2$, from 2 $\mu g/mm^2$ to 8 $\mu g/mm^2$, from 2 $\mu g/mm^2$ to 6 $\mu g/mm^2$, from 2 $\mu g/mm^2$ to 4 $\mu g/mm^2$, from 4 $\mu g/mm^2$ to 10 $\mu g/mm^2$, from 4 $\mu g/mm^2$ to 8 $\mu g/mm^2$, from 4 $\mu g/mm^2$ to 6 $\mu g/mm^2$, from 6 $\mu g/mm^2$ to 10 $\mu g/mm^2$, from 6 $\mu g/mm^2$ to 8 $\mu g/mm^2$, or from 8 $\mu g/mm^2$ to 10 $\mu g/mm^2$. In some aspects the concentration density of therapeutic agent in the coating layer or polymer microparticle may be from 0.5 $\mu g/mm^2$ to 5 $\mu g/mm^2$.

[0037] The methods to apply the coating layer include to a medical device may include dip coating, metering coating, spray coating, electrostatic spray coating, roller coating, spin coating,

ink-jet printing, 3D printing, or combinations thereof. A preferred method is metering coating and spray coating. After the solvent has evaporated, the coating layer is left on the surface.

[0038] In some aspects, the coating layer may include crystalline therapeutic agent and/or an amorphous therapeutic agent of a particular size range or ranges. In some aspects, the crystalline and/or amorphous therapeutic agent can be embedded within the coating layer. In other aspects, the crystalline and/or amorphous therapeutic agent is loaded within a polymer microparticle embedded in the coating layer. In further aspects, the crystalline and/or amorphous therapeutic agent adheres to the surface of the medical device through the evaporation of a solvent. In some aspects, the crystalline and/or amorphous therapeutic agent microparticle size can vary from about 0.1 μm to about 100 μm, including about 0.2, 0.3, 0.4, 0.5, 0.6, 0.7, 0.8, 0.9, 1.0, 2, 3, 4, 5, 6, 7, 8, 9, 10, 20, 30, 40, 50, 60, 70, 80, 90, 99 μm and any size or number therein. In some aspects, the particle size is of from about 1 μm to about 20 μm. In other aspects, the particle size of from about 10 μm to about 100 μm. Size selection can be achieved through methods understood in the art, such as by passing through mesh of a pre-determined pore or hole size. The desired particle size can be achieved by dry grind, microfluidics, or wet grinding. The grinding method may include techniques such as use of a jaw crusher, ultra-centrifugal mill, cyclone mill, cross beater mill, rotor beater mill, cutting mill, knife mill, mortar grinder, disc mill, mixer mill, cryomill, planetary ball mill, drum mill, and/or fine grinding rod mill. In some aspects, the particle size may be achieved with use of a ball mill. The ground drug particles and polymer mix may be combined with a solvent (or a mixture of solvents) and form a slurry coating solution. The methods may also include application of the slurry coating solution to a medical device surface. Such techniques for application may include dip coating, metering coating, spray coating, electrostatic spray coating, roller coating, spin coating, ink-jet printing, and 3D printing. In certain aspects, the method includes metering coating.

[0039] In aspects, the coating layer may include a surfactant. In some aspects, the surfactant is provided at a mass with respect to the first solution of about 1.5 mg to about 160 mg, including about 2, 5, 10, 15, 20, 25, 50, 75, 100, 125, and 150 mg. In some aspects the surfactant is a polyosrbate, such as polysorbate 20, polysorbayte 80, or similar polysorbate with varying aliphatic tail lengths. In some aspects, the surfactant is sodium stearate, sodium docusate, an alkyl ether phosphate, benzalkoaonium chloride, perfluorooctanesulfonate, combinations thereof, or similar. The surfactant can be an anionic surfactant, a cationic surfactant, a non-ionic surfactant, or an

amphoteric surfactant. Exemplary surfactants may be chosen from PEG fatty esters, PEG omega-3 fatty esters and alcohols, glycerol fatty esters, sorbitan fatty esters, PEG glyceryl fatty esters, PEG sorbitan fatty esters, sugar fatty esters, PEG sugar esters, Tween 20, Tween 40, Tween 60, p-isononylphenoxypolyglycidol, PEG laurate, PEG oleate, PEG stearate, PEG glyceryl laurate, PEG glyceryl oleate, PEG glyceryl stearate, polyglyceryl laurate, polyglyceryl oleate, polyglyceryl myristate, polyglyceryl palmitate, polyglyceryl-6 laurate, polyglyceryl-6 oleate, polyglyceryl-6 myristate, polyglyceryl-6 palmitate, polyglyceryl-10 laurate, polyglyceryl-10 oleate, polyglyceryl-10 myristate, polyglyceryl-10 palmitate , PEG sorbitan monolaurate, PEG sorbitan monolaurate, PEG sorbitan monooleate, PEG sorbitan stearate, PEG oleyl ether, PEG laurayl ether, Tween 20, Tween 40, Tween 60, Tween 80, octoxynol, monoxynol, tyloxapol, sucrose monopalmitate, sucrose monolaurate, decanoyl-N-methylglucamide, n-decyl - β -D-glucopyranoside, n-decyl - β -D-maltopyranoside, n-dodecyl - β -D-glucopyranoside, n-dodecyl - β -D-maltoside, heptanoyl-N-methylglucamide, n-heptyl- β -D-glucopyranoside, n-heptyl - β -D-thioglucoside, n-hexyl - β -D-glucopyranoside, nonanoyl-N-methylglucamide, n-nonyl - β -D-glucopyranoside, octanoyl-N-methylglucamide, n-octyl- β -D-glucopyranoside, octyl - β -D-thioglucopyranoside and their derivatives. In some aspects, the excipients may include one of sodium docusate sorbitol, urea, BHT, BHA, PEG-sorbitan monolaureate, petrolatum, methyl stearate or a combination thereof.

[0040] In aspects, the coating layer includes a hydrophobic polymer with the therapeutic dispersed throughout. In some aspects, the biodegradable polymer chosen from a fatty acid, a fatty acid ester, polylactic acid (PLLA,PDLA,PDLLA), polycaprolactone (PCL), sodium docusate, PLGA, PLGA-b-mPEG, polyglutamic acid, polyacrilic acid, hyaluronic acid, alginate, PVA, PVP, Pluronic (PEO-PPO-PEO),cellulose, CMC, HPC, starch, chitosan, human serum albumin (HSA), phospholipids, fatty acid, fatty acid esters, triglycerides, beeswax, cyclodextrin, Tween 20, Tween 80, TPGS, SLS, butylated hydroxytoluene, vitamin E, vitamin E succinate, tannic acid, polyethylene glycol, N-isopropylacrylamide, and sorbitol esters.. In further aspects, the polymer is a bioabsorbable polymer of a hydrophobic or hydrophilic nature. By way of example and not limitation, examples of bioabsorbable hydrophobic materials may include semi-synthetic glycerides (e.g. Suppocire AIML, AML, BML, BS2, BS2X, NBL, NAIS 10, CS2X), lecithin, hydrogenated coconut oil, coconut oil, cocoa butter, glycerinated gelatin, hydrogenated vegetable oils, hard fats, mineral oil, cetyl alcohol, petrolatum, petroleum jelly, decanol, soft paraffin,

tridecanol, dodecanol, long chain saturated fatty acids, long chain unsaturated fatty acids, fatty acid esters, fatty acid ethers, witepsol, solid lipids, methyl stearate, triglycerides, glyceryl monostearate, glyceryl palmitostearate, stearic acid, palmitic acid, decanoic acid, behenic acid, beeswax, carnauba wax, paraffin, fatty acid triglycerides, fatty acid alcohols, PEG-fatty acid esters (with hydrophilic-lipophilic balance (HLB) below 13), PEG-surfactants with an HLB below 13, or combinations thereof.

[0041] In some aspects, the coating layer includes one or more excipients. Suitable excipients that can be used in some aspects of the present disclosure include, without limitation, organic and inorganic pharmaceutical excipients, natural products and derivatives thereof (such as sugars, vitamins, amino acids, peptides, proteins, and fatty acids), surfactants (anionic, cationic, non-ionic, and ionic), and mixtures thereof. The following list of excipients useful in the present disclosure is provided for exemplary purposes only and is not intended to be comprehensive. Many other excipients may be useful for purposes of the present disclosure, such as polyglutamic acid, polyacrilic acid, hyaluronic acid, alginate, PVA, PVP, Pluronic (PEO-PPO-PEO),cellulose, CMC, HPC, starch, chitosan, human serum albumin (HSA), phospholipids, fatty acid, fatty acid esters, triglycerides, beeswax, cyclodextrin, polysorbates, polyethylene glycol, polyvinylpyrrolidone (PVP) and aliphatic polyesters.

[0042] In some aspects, the excipients may feature a drug affinity part. The excipients of the present disclosure may feature a hydrophilic part. As is understood in the art, the terms “hydrophilic” and “hydrophobic” are relative terms. To function as an excipient in some aspects of the present disclosure, the excipient is a compound that includes polar or charged hydrophilic moieties as well as non-polar hydrophobic (lipophilic) moieties. The hydrophilic part can accelerate diffusion and increase permeation of the therapeutic agent into tissue. The hydrophilic part of the excipient may facilitate rapid movement of therapeutic agent off the expandable medical device during deployment at the target site by preventing hydrophobic drug molecules from clumping to each other and to the device, increasing drug solubility in interstitial spaces, and/or accelerating drug passage through polar head groups to the lipid bilayer of cell membranes of target tissues.

[0043] Exemplary excipients for application in the present disclosure may include chemical compounds with one or more hydroxyl, amino, carbonyl, carboxyl, acid, amide or ester moieties.

Hydrophilic chemical compounds with one or more hydroxyl, amino, carbonyl, carboxyl, acid, amide or ester moieties having a molecular weight less than 5,000 to 10,000 are preferred in certain aspects. In other aspects, molecular weight of the excipient with one or more hydroxyl, amino, carbonyl, carboxyl, acid, amide, or ester moieties is preferably less than 1000 to 5,000, or more preferably less than 750 to 1,000, or most preferably less than 750. In these aspects, the molecular weight of the excipient is less than that of the therapeutic agent to be delivered.

[0044] In some aspects, the one or more excipients may be selected from amino alcohols, alcohols, amines, acids, amides and hydroxyl acids in both cyclo- and linear- aliphatic and aromatic groups. Examples include L-ascorbic acid and its salt, D-glucoascorbic acid and its salt, tromethamine, triethanolamine, diethanolamine, meglumine, glucamine, sodium docusate, urea, amine alcohols, glucoheptonic acid, glucomic acid, hydroxyl ketone, hydroxyl lactone, gluconolactone, glucoheptonolactone, glucooctanoic lactone, gulonic acid lactone, mannoic lactone, ribonic acid lactone, lactobionic acid, glucosamine, glutamic acid, benzyl alcohol, benzoic acid, hydroxybenzoic acid, propyl 4-hydroxybenzoate, lysine acetate salt, gentisic acid, lactobionic acid, lactitol, sorbitol, glucitol, sugar phosphates, glucopyranose phosphate, sugar sulphates, sugar alcohols, sinapic acid, vanillic acid, vanillin, methyl paraben, propyl paraben, xylitol, 2-ethoxyethanol, sugars, galactose, glucose, ribose, mannose, xylose, sucrose, lactose, maltose, arabinose, lyxose, fructose, cyclodextrin, (2-hydroxypropyl)-cyclodextrin, acetaminophen, ibuprofen, retinoic acid, lysine acetate, gentisic acid, catechin, catechin gallate, tiletamine, ketamine, propofol, lactic acids, acetic acid, salts of any organic acid and amine described above, polyglycidol, glycerol, multiglycerols, galactitol, di(ethylene glycol), tri(ethylene glycol), tetra(ethylene glycol), penta(ethylene glycol), di(propylene glycol), tri(propylene glycol), tetra(propylene glycol, and penta(propylene glycol), and combinations thereof. Some of the chemical compounds with one or more hydroxyl, amine, carbonyl, carboxyl, amide or ester moieties described herein are very stable under heating, survive an ethylene oxide sterilization process, and/or do not react with the therapeutic agent during sterilization.

[0045] In some aspects, the one or more excipients may be selected from amino acids and salts thereof. For example, the excipient may be one or more of alanine, arginine, asparagines, aspartic acid, cysteine, glutamic acid, glutamine, glycine, histidine, proline, isoleucine, leucine, lysine, methionine, phenylalanine, serine, threonine, tryptophan, tyrosine, valine, and derivatives thereof are. Certain amino acids, in their zwitterionic form and/or in a salt form with a monovalent or

multivalent ion, have polar groups, relatively high octanol-water partition coefficients, and are useful in some facets of the present disclosure. In the context of the present disclosure "low-solubility amino acid" refers to amino acid having a solubility in unbuffered water of less than about 4% (40 mg/ml). These include cystine, tyrosine, tryptophan, leucine, isoleucine, phenylalanine, asparagine, aspartic acid, glutamic acid, and methionine.

[0046] Amino acid dimers, sugar-conjugates, and other derivatives may also be considered for excipients. Through simple reactions well known in the art hydrophilic molecules may be joined to hydrophobic amino acids, or hydrophobic molecules to hydrophilic amino acids, to make additional excipients useful in aspects of the present disclosure. Catecholamines, such as dopamine, levodopa, carbidopa, and DOPA, are also useful as excipients.

[0047] In some aspects, the excipient may be of a material that is at a glass transition temperature at 37 °C or higher. As identified herein, providing a material on the medical device that transitions to a sticky or tacky state *in situ* within the vessel of the subject allows for adhering the coating to the vessel wall. Such materials may include hydrogenated coconut oil, coconut oil, mineral oil, cetyl alcohol, petrolatum, petroleum jelly, decanol, soft paraffin, tridecanol, dodecanol, long chain saturated fatty acids, long chain unsaturated fatty acids, fatty acid esters, fatty acid ethers, witepsol, solid lipids, methyl stearate, triglycerides, glyceryl monostearate, glyceryl palmitostearate, stearic acid, palmitic acid, decanoic acid, behenic acid, beeswax, carnauba wax, paraffin, fatty acid triglycerides, fatty acid alcohols or combinations thereof.

[0048] In some aspects, the excipients may be liquid additives. One or more liquid excipients may be can be used in the medical device coating to improve the integrity of the coating. Without being bound by theory, a liquid excipient can improve the compatibility of the therapeutic agent in the coating mixture. The liquid excipients used in aspects of the present disclosure is not a solvent. The solvents such as ethanol, methanol, dimethylsulfoxide, and acetone, will be evaporated after the coating is dried. In other words, the solvent will not stay in the coating after the coating is dried. In contrast, the liquid excipients in aspects of the present disclosure will stay in the coating after the coating is dried. The liquid excipient is liquid or semi-liquid at room temperature and one atmosphere pressure. The liquid excipient may form a gel at room temperature. In some aspects, the liquid excipient may be a non-ionic surfactant. Examples of liquid excipients include PEG-fatty acids and esters, PEG-oil transesterification products,

polyglyceryl fatty acids and esters, Propylene glycol fatty acid esters, PEG sorbitan fatty acid esters, and PEG alkyl ethers as mentioned above. Some examples of a liquid excipient are Tween 80, Tween 81, Tween 20, Tween 40, Tween 60, Solutol HS 15, Cremophor RH40, and Cremophor EL&ELP.

[0049] In some aspects, the excipient may be a surfactant; a chemical compound with one or more hydroxyl, amine, carbonyl, carboxyl, amides or ester moieties; or both. Exemplary surfactants may be chosen from PEG fatty esters, PEG omega-3 fatty esters and alcohols, glycerol fatty esters, sorbitan fatty esters, PEG glyceryl fatty esters, PEG sorbitan fatty esters, sugar fatty esters, PEG sugar esters, Tween 20, Tween 40, Tween 60, p-isononylphenoxypolyglycidol, PEG laurate, PEG oleate, PEG stearate, PEG glyceryl laurate, PEG glyceryl oleate, PEG glyceryl stearate, polyglyceryl laurate, polyglyceryl oleate, polyglyceryl myristate, polyglyceryl palmitate, polyglyceryl-6 laurate, polyglyceryl-6 oleate, polyglyceryl-6 myristate, polyglyceryl-6 palmitate, polyglyceryl-10 laurate, polyglyceryl-10 oleate, polyglyceryl-10 myristate, polyglyceryl-10 palmitate , PEG sorbitan monolaurate, PEG sorbitan monolaurate, PEG sorbitan monooleate, PEG sorbitan stearate, PEG oleyl ether, PEG laurayl ether, Tween 20, Tween 40, Tween 60, Tween 80, octoxynol, monoxynol, tyloxapol, sucrose monopalmitate, sucrose monolaurate, decanoyl-N-methylglucamide, n-decyl - β -D-glucopyranoside, n-decyl - β -D-maltopyranoside, n-dodecyl - β -D-glucopyranoside, n-dodecyl - β -D-maltoside, heptanoyl-N-methylglucamide, n-heptyl- β -D-glucopyranoside, n-heptyl - β -D-thioglucoside, n-hexyl - β -D-glucopyranoside, nonanoyl-N-methylglucamide, n-nonyl - β -D-glucopyranoside, octanoyl-N-methylglucamide, n-octyl- β -D-glucopyranoside, octyl - β -D-thioglucopyranoside and their derivatives. In some aspects, the excipients may include one of sodium docusate sorbitol, urea, BHT, BHA, PEG-sorbitan monolaureate, petrolatum, methyl stearate or a combination thereof.

[0050] In some aspects, one or more of a surfactant or a small water-soluble molecule (the chemical compounds with one or more hydroxyl, amine, carbonyl, carboxyl, amides or ester moieties) with the therapeutic agent are in certain cases superior to only utilizing the therapeutic agent and a single excipient. By incorporating the one or more additional excipients, the drug coating may have increased stability during transit and rapid drug release when pressed against tissues of the lumen wall at the target site of therapeutic intervention when compared to some formulations comprising the therapeutic agent and only one excipient. Furthermore, the

miscibility and compatibility of the therapeutic agent with the excipient or the drug coating with the medical device, generally, is improved by the presence of the one or more additional excipients. For example, a surfactant may allow for improved coating uniformity and integrity.

[0051] In some aspects, the coating layer(s) may include multiple excipients, and one excipient is more hydrophilic than one or more of the other excipients. In another embodiment, the coating layer multiple excipients, and one excipient has a different structure from that of one or more of the other excipients. In yet another aspect, the coating layer includes multiple excipients. Some aspects of the present disclosure may include a mixture of at least two additional excipients, for example, a combination of one or more surfactants and one or more chemical compound with one or more hydroxyl, amine, carbonyl, carboxyl, amides or ester moieties. For example, therapeutic agents may bind to extremely water-soluble small molecules more poorly than surfactants, which can lead to suboptimal coating uniformity and integrity. Some surfactants may adhere so strongly to the therapeutic agents and the surface of the medical device that the therapeutic agent is not able to rapidly release from the surface of the medical device at the target site. On the other hand, some water-soluble small molecules (with one or more hydroxyl, amine, carbonyl, carboxyl, amides or ester moieties) adhere so poorly to the medical device that they release therapeutic agents before it reaches the target site, for example, into serum during the transit of a coated balloon catheter to the site targeted for intervention. By incorporating a mixture of multiple excipients, the coating layer may have improved properties over a formulation with only one excipient or no excipient.

[0052] In some aspects, the one or more additional excipients may include an antioxidant. An antioxidant is a molecule capable of slowing or preventing the oxidation of other molecules. Oxidation reactions can produce free radicals and/or peroxides, which start chain reactions and may cause degradation of therapeutic agents. Antioxidants terminate these chain reactions by removing free radicals and inhibiting oxidation of the active agent by being oxidized themselves. Antioxidants are used as the one or more additional excipients in certain aspects to prevent or slow the oxidation of the therapeutic agents in the coatings for medical devices. Antioxidants are a type of free radical scavengers. The antioxidant may be used alone or in combination with other additional excipients in certain aspects and may prevent degradation of the active therapeutic agent during sterilization or storage prior to use. Some representative examples of antioxidants that may be used in the drug coatings of the present disclosure include, without limitation,

oligomeric or polymeric proanthocyanidins, polyphenols, polyphosphates, polyazomethine, high sulfate agar oligomers, chitooligosaccharides obtained by partial chitosan hydrolysis, polyfunctional oligomeric thioethers with sterically hindered phenols, hindered amines such as, without limitation, p-phenylene diamine, trimethyl dihydroquinolones, and alkylated diphenyl amines, substituted phenolic compounds with one or more bulky functional groups (hindered phenols) such as tertiary butyl, arylamines, phosphites, hydroxylamines, and benzofuranones. Also, aromatic amines such as p-phenylenediamine, diphenylamine, and N,N' disubstituted p-phenylene diamines may be utilized as free radical scavengers. Other examples include, without limitation, butylated hydroxytoluene ("BHT"), butylated hydroxyanisole ("BHA"), L-ascorbate (Vitamin C), Vitamin E, herbal rosemary, sage extracts, glutathione, resveratrol, ethoxyquin, rosmanol, isorosmanol, rosmaridiphenol, propyl gallate, gallic acid, caffeic acid, p-coumeric acid, p-hydroxy benzoic acid, astaxanthin, ferulic acid, dehydrozingerone, chlorogenic acid, ellagic acid, propyl paraben, sinapic acid, daidzin, glycitin, genistin, daidzein, glycitein, genistein, isoflavones, and tertbutylhydroquinone. Examples of some phosphites include di(stearyl)pentaerythritol diphosphite, tris(2,4-di-tert.butyl phenyl)phosphite, dilauryl thiodipropionate and bis(2,4-di-tert.butyl phenyl)pentaerythritol diphosphite. Some examples, without limitation, of hindered phenols include octadecyl-3,5,di-tert.butyl-4-hydroxy cinnamate, tetrakis-methylene-3-(3',5'-di-tert.butyl-4-hydroxyphenyl)propionate methane 2,5-di-tert-butylhydroquinone, ionol, pyrogallol, retinol, and octadecyl-3-(3,5-di-tert.butyl-4-hydroxyphenyl)propionate. An antioxidant may include glutathione, lipoic acid, melatonin, tocopherols, tocotrienols, thiols, Beta- carotene, retinoic acid, cryptoxanthin, 2,6-di-tert-butylphenol, propyl gallate, catechin, catechin gallate, and quercetin. Preferable antioxidants are butylated hydroxytoluene (BHT) and butylated hydroxyanisole (BHA).

Methods

[0053] In aspects, the present disclosure concerns methods of using the scoping device as disclosed herein. In some aspects, the methods can include inserting the scoping device into a space within a subject. In some aspects, the space is a subject's airways. In some aspects, the presence of a camera on the distal end allows a user to view and/or nhavigate the subject's space as the scoping section is moved further therein. In some aspects, the methods include identifying a target tissue within the space of the subject.

[0054] In aspects, the methods may also include expanding and/or inflating the balloon *in situ* of a subject, such as ay a site of interest or site in need of treatment. Once inflated, the coating layer may be deposited on the site of interest or need. For example, providing a pharmaceutical or therapeutic agent in the coating layer can allow for such to be deposited on the surface of the target tissue, thereby applying directly treatment thereto.

[0055] In aspects, the cables connected to the exterior of the inflatable balloon allow a user to cause the balloon to move or rotate *in situ*. For example, as set forth in FIG. 5, pulling the cable on one side of the balloon can increase the surface area contact between the inflated balloon and the target tissue. It will also be appreciated that in some aspects, the pressure within the balloon or the degree of inflation therein may allow a user to increase the surface contact area. By way of example, once a balloon is in a preferred position, allowing the balloon to partially deflate may cause the balloon to drape over the site for delivery. In some aspects, providing multiple cables to the exterior surface of the balloon allows a user to move or rotate the inflated balloon in two or more directions, thereby increasing the surface area upon which the coating layer is deposited.

[0056] The foregoing description of particular embodiment(s) is merely exemplary in nature and is in no way intended to limit the scope of the invention, its application, or uses, which may, of course, vary. The invention is described with relation to the non-limiting definitions and terminology included herein. These definitions and terminology are not designed to function as a limitation on the scope or practice of the invention but are presented for illustrative and descriptive purposes only. While the processes or compositions are described as an order of individual steps or using specific materials, it is appreciated that steps or materials may be interchangeable such that the description of the invention may include multiple parts or steps arranged in many ways as is readily appreciated by one of ordinary skill in the art.

[0057] The terminology used herein is for the purpose of describing particular embodiments only and is not intended to be limiting. As used herein, the singular forms “a”, “an”, and “the” are intended to include the plural forms, including “at least one,” unless the content clearly indicates otherwise. “Or” means “and/or”. As used herein, the term “and/or” includes any and all combinations of one or more of the associated listed items. It will be further understood that the terms “comprises” and/or “comprising”, or “includes” and/or “including” when used in this specification, specify the presence of stated features, regions, integers, steps, operations, elements,

components, and/or groups, but do not preclude the presence or addition of one or more other features, regions, integers, steps, operations, elements, components, and/or groups thereof. The term "or a combination thereof" means a combination including at least one of the foregoing elements.

[0058] Unless otherwise defined, all terms (including technical and scientific terms) used herein have the same meaning as commonly understood by one of ordinary skill in the art to which this disclosure belongs. It will be further understood that terms such as those defined in commonly used dictionaries, should be interpreted as having a meaning that is consistent with their meaning in the context of the relevant art and the present disclosure, and will not be interpreted in an idealized or overly formal sense unless expressly so defined herein.

[0059] Patents, applications, and publications mentioned in the specification are indicative of the levels of those skilled in the art to which the invention pertains. These patents and publications are incorporated herein by reference to the same extent as if each individual application or publication was specifically and individually incorporated herein by reference.

[0060] The foregoing description is illustrative of particular aspects of the invention, but is not meant to be a limitation upon the practice thereof. The following claims, including all equivalents thereof, are intended to define the scope of the invention.

CLAIMS

1. A scoping device comprising a proximal body and a distal scoping section with a distal end, wherein the distal end comprises an inflatable balloon connected to an inflation means through a catheter.

2. The scoping device of claim 1, wherein the distal end further comprises a port.

3. The scoping device of claim 2, wherein the port allows the inflatable balloon to expand outwardly from the distal end during inflation.

4. The scoping device of claim 1 or 3, further comprising a cable connected to an outer portion of the inflatable balloon.

5. The scoping device of any of claims 1 to 4, further comprising at least a second cable connected to a different point on an outer portion of the inflatable balloon.

6. The scoping device of claim 4 or 5, wherein the cable or cables are threaded along the interior of the scoping section.

7. The scoping device of claim 6, wherein the cable or cables are threaded through the catheter.

8. The scoping device of claim 6, wherein the cable or cables are threaded through the interior of the scoping section exterior to the catheter.

9. The scoping device of claim 8, wherein the scoping section further comprises one or more additional cable housings through which the cable or cables are threaded.

10. The scoping device of any of claims 6 to 9, wherein the proximal body comprises an exit port and further wherein the cable or cables exit the scoping device through the exit port.

11. The scoping device of any of claims 1 to 10, wherein the inflatable balloon comprises a shape chosen from a mushroom cap, a horseshoe, or of three or more foils.

12. The scoping device of any of claims 1 to 11, wherein the inflatable balloon comprises a coating layer on at least a portion of an exterior surface thereof.

13. The scoping device of claim 12, wherein the coating layer comprises one or more therapeutic agents.

14. The scoping device of claim 13, wherein the one or more therapeutic agents are chosen from abraxane, adagrasib, afatinib, everolimus, alectinib, pemetrexed, brigatinib, bevacizumab, amivantamab, capmatinib, cemiplimab, ceritinib, crizotinib, ramucirumab, dabrafenib, dacomitinib, docetaxel, doxorubicin, trastuzumab, entrectinib, erlotinib, mobocertinib, pralsetinib, gefitinib, gemcitabine, tremelimumab, ipilmumab, permbrolizumab, lorlatinib, sotorasib, trametinib, methotrexate, nectiumumab, nivolumab, osimertinib, paclitaxel, ramucirumab, selpercatinib, tepotinib, vinorelbine, or a combination thereof.

15. The scoping device of any of claims 12 to 14, wherein the coating alyer further comprises microparticles comprised of a bioabsorbable polymer and a pharmaceutical agent.

16. The scoping device of claim 15, wherein the biopolymer is chosen from poly-glycolic acid (PGA), poly-L-lactic acid (PLLA), polycaprolactone (PCL), poly-DL-lactic acid (PDLLA), poly(trimethylene carbonate) (PTMC), poly (ester amine) (PEA), poly(para-dioxanone) (PPDO), poly-2-hydroxy butyrate (PHB), poly-lactic-co-glycolic acid (PLGA), or a combination thereof.

17. The scoping device of claim 15 or 16, wherein the pharmaceutrical agent is chosen from abraxane, adagrasib, afatinib, everolimus, alectinib, pemetrexed, brigatinib, bevacizumab, amivantamab, capmatinib, cemiplimab, ceritinib, crizotinib, ramucirumab, dabrafenib, dacomitinib, docetaxel, doxorubicin, trastuzumab, entrectinib, erlotinib, mobocertinib, pralsetinib, gefitinib, gemcitabine, tremelimumab, ipilmumab, permbrolizumab, lorlatinib,

sotorasib, trametinib, methotrexate, nectiumumab, nivolumab, osimertinib, paclitaxel, ramucirumab, selpercatinib, tepotinib, vinorelbine, or a combination thereof.

18. The scoping device of any of claims 15 to 17, wherein the micropartciles are of a cross-sectional width of 0.1 μm to about 100 μm.

19. The scoping device of any of claims 15 to 18, wherein the microparticles further comprise n excipient.

20. The scoping device of claim 19, wherein the excipient is chosen from sodium docusate sorbitol, urea, BHT, BHA, PEG-sorbitan monolaureate, petrolatum, methyl stearate or a combination thereof.

21. The scoping device of any of claims 12-20, wherein the coating layer further comprises a surfactant.

22. The scoping device of claim 21, wherein the surfactant is chosen from PEG fatty esters, PEG omega-3 fatty esters and alcohols, glycerol fatty esters, sorbitan fatty esters, PEG glyceryl fatty esters, PEG sorbitan fatty esters, sugar fatty esters, PEG sugar esters, Tween 20, Tween 40, Tween 60, p-isononylphenoxypolyglycidol, PEG laurate, PEG oleate, PEG stearate, PEG glyceryl laurate, PEG glyceryl oleate, PEG glyceryl stearate, polyglyceryl laurate, polyglyceryl oleate, polyglyceryl myristate, polyglyceryl palmitate, polyglyceryl-6 laurate, polyglyceryl-6 oleate, polyglyceryl-6 myristate, polyglyceryl-6 palmitate, polyglyceryl-10 laurate, polyglyceryl-10 oleate, polyglyceryl-10 myristate, polyglyceryl-10 palmitate , PEG sorbitan monolaurate, PEG sorbitan monolaurate, PEG sorbitan monooleate, PEG sorbitan stearate, PEG oleyl ether, PEG laurayl ether, Tween 20, Tween 40, Tween 60, Tween 80, octoxynol, monoxynol, tyloxapol, sucrose monopalmitate, sucrose monolaurate, decanoyl-N-methylglucamide, n-decyl - β -D-glucopyranoside, n-decyl - β -D-maltopyranoside, n-dodecyl - β -D-glucopyranoside, n-dodecyl - β -D-maltoside, heptanoyl-N-methylglucamide, n-heptyl- β -D-glucopyranoside, n-heptyl - β -D-thioglucoside, n-hexyl - β -D-glucopyranoside, nonanoyl-N-methylglucamide, n-nonyl - β -D-glucopyranoside, octanoyl-N-methylglucamide, n-octyl- β -D-glucopyranoside, octyl - β -D-

thioglucopyranoside and their derivatives. In some aspects, the excipients may include one of sodium docusate sorbitol, urea, BHT, BHA, PEG-sorbitan monolaureate, petrolatum, methyl stearate or a combination thereof.

23. The scoping device of any of claims 1 to 22, wherein the distal end further comprises a camera operably connected to the proximal body.

24. The scoping device of any of claims 1 to 23, wherein the proximal body is operably connected to the distal scoping section in a manner that allows for one or more points along the scoping section to bend or curve.

25. A method for site specific delivery of one or more pharmaceutical agents in a space within a subject, comprising:

placing the scoping section of the scoping device of claim 1 into the space of the subject;

navigating the distal end of the scoping section to a desired location within the subject's space;

inflating the inflatable balloon at the desired location;

moving or rotating the balloon at the desired location; and,

withdrawing the scoping section.

26. The method of claim 25, wherein the inflated inflatable balloon is moved or rotated by a pulling force on a cable connected to an exterior portion of the inflated inflatable balloon.

27. The method of claim 25 or 26, wherein the exterior surface of the inflated inflatable balloon includes a coating layer comprised of one or more therapeutic agents.

28. The method of claim 27, wherein moving or rotating the inflated inflatable balloon at the desired location allows the ocating layer to at least in part transfer to the subject's tissue.

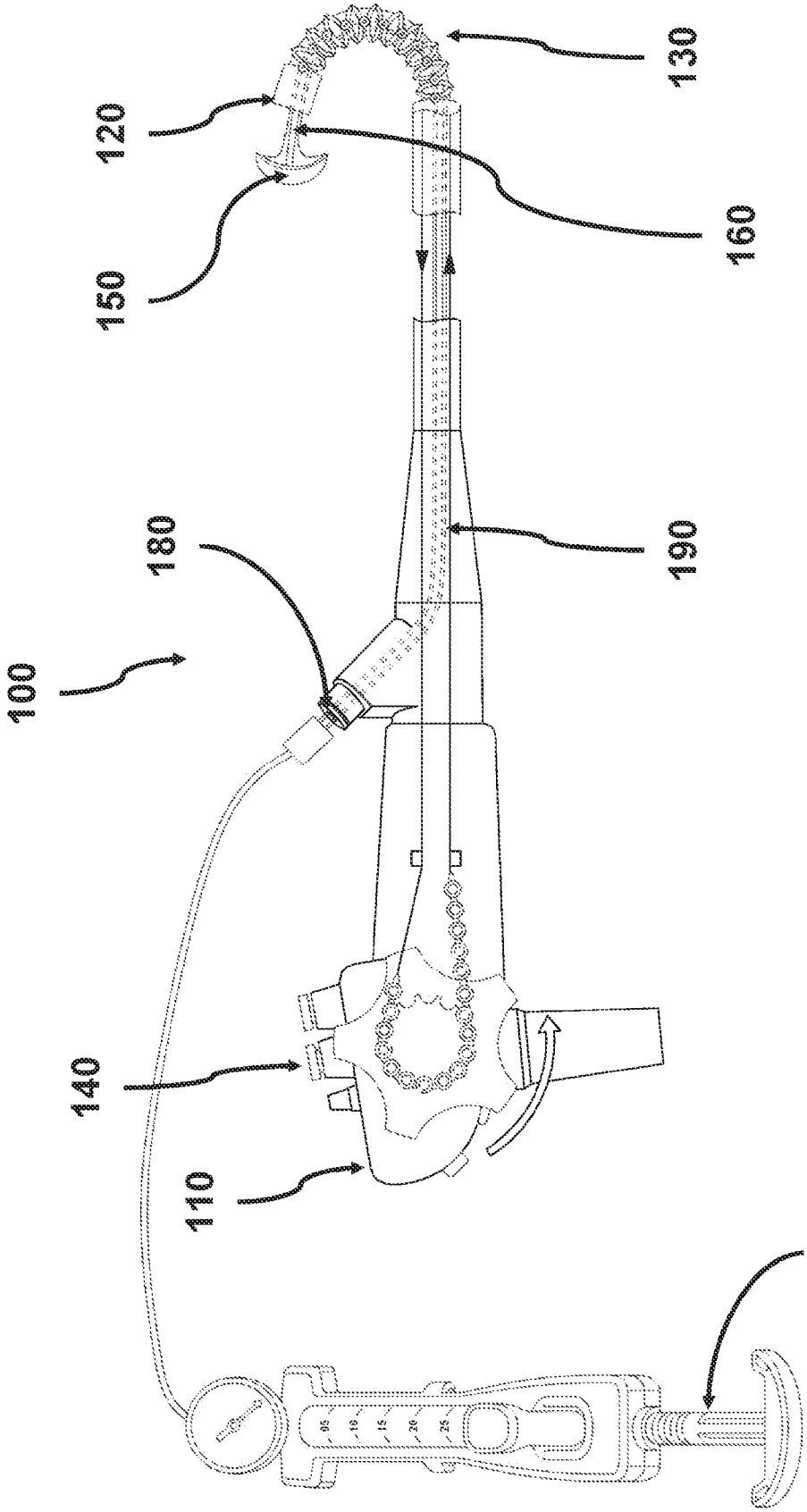

FIG. 1

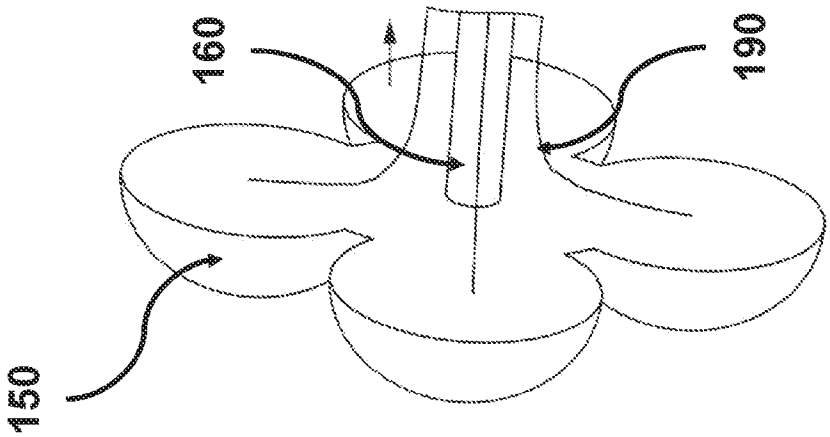

FIG. 4

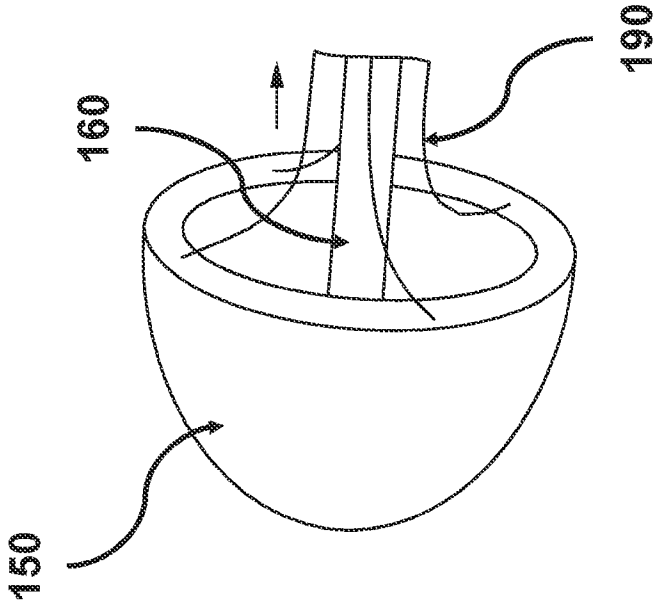

FIG. 3

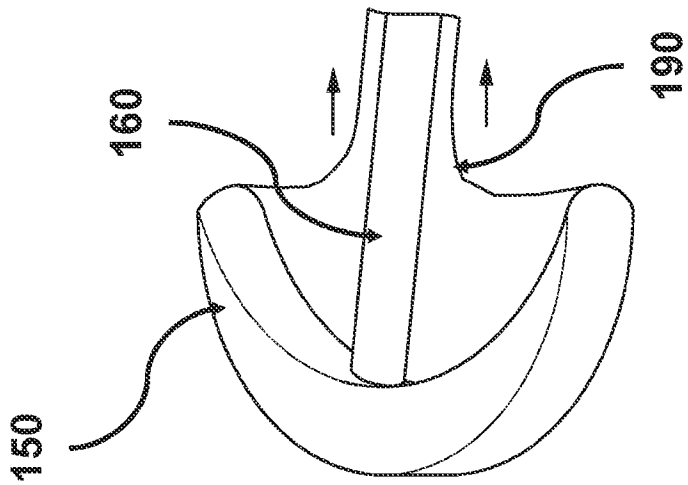

FIG. 2

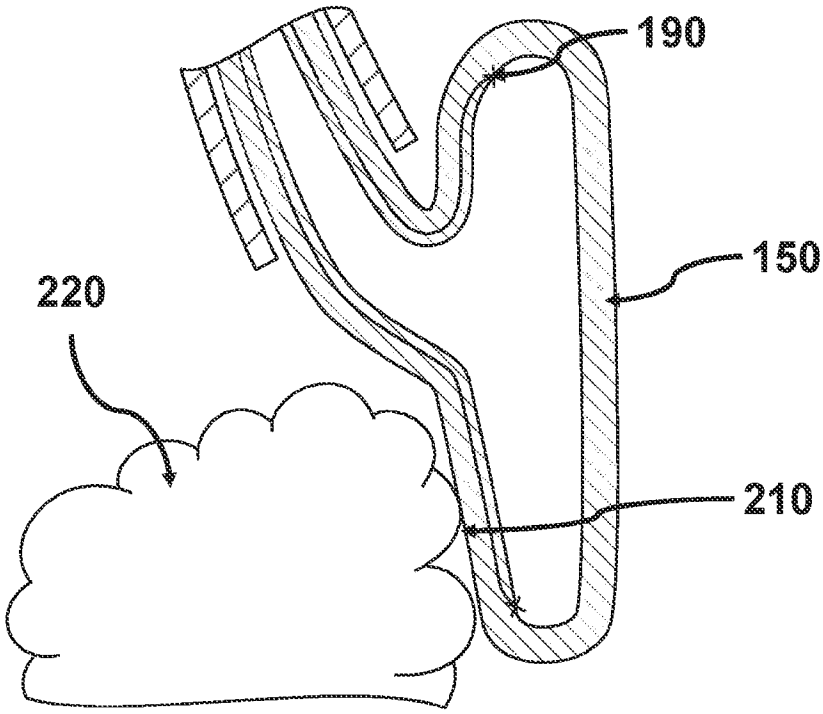

FIG. 5

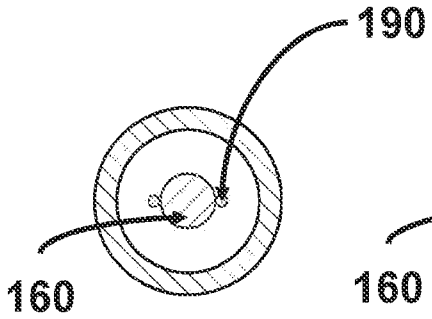

FIG. 6

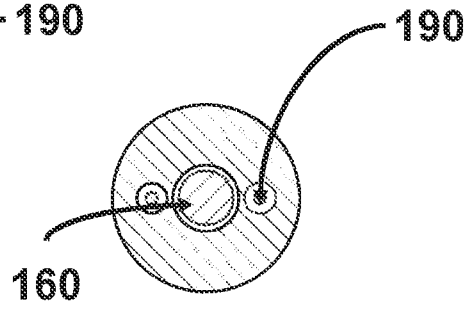

FIG. 7

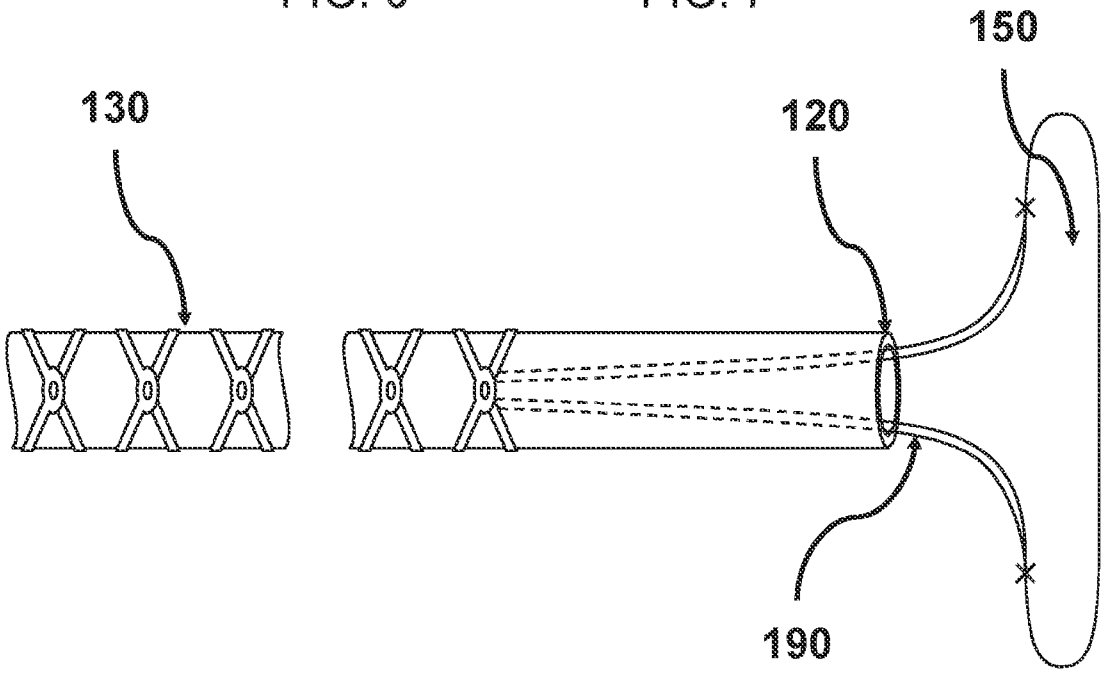

FIG. 8

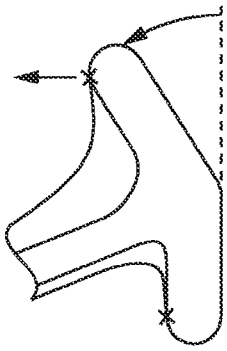

FIG. 9

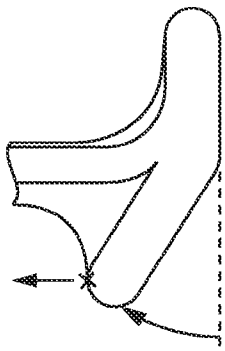

FIG. 10

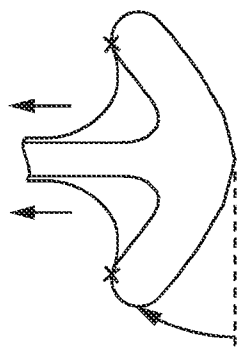

FIG. 11

INTERNATIONAL SEARCH REPORT

International application No
PCT/US2023/084799

A. CLASSIFICATION OF SUBJECT MATTER

INV. A61B1/00 A61B1/018 A61M25/01
ADD. A61M25/10

According to International Patent Classification (IPC) or to both national classification and IPC

B. FIELDS SEARCHED

Minimum documentation searched (classification system followed by classification symbols)
A61B A61M

Documentation searched other than minimum documentation to the extent that such documents are included in the fields searched

Electronic data base consulted during the international search (name of data base and, where practicable, search terms used)
EPO-Internal, WPI Data

C. DOCUMENTS CONSIDERED TO BE RELEVANT

Category*	Citation of document, with indication, where appropriate, of the relevant passages	Relevant to claim No.
X	US 2021/162185 A1 (SMITH AMANDA [US] ET AL) 3 June 2021 (2021-06-03) paragraphs [0078] - [0095], [0105] - [0120], [0150] - [0174], [0211] - [0231]; figures 1-5	1-4, 10-24
X	US 2021/001099 A1 (TILSON ALEXANDER QUILLIN [US] ET AL) 7 January 2021 (2021-01-07) paragraphs [0081] - [0091], [0230] - [0277], [0571], [0579] - [0582]; figures 1-46,150	1-12,23, 24
A	US 2023/149672 A1 (WANG LIXIAO [US] ET AL) 18 May 2023 (2023-05-18) paragraphs [0008] - [0010], [0092] - [0111], [0132]; figures 1,11,12	1-24

-/--

[x] Further documents are listed in the continuation of Box C.

[x] See patent family annex.

* Special categories of cited documents :

"A" document defining the general state of the art which is not considered to be of particular relevance

"E" earlier application or patent but published on or after the international filing date

"L" document which may throw doubts on priority claim(s) or which is cited to establish the publication date of another citation or other special reason (as specified)

"O" document referring to an oral disclosure, use, exhibition or other means

"P" document published prior to the international filing date but later than the priority date claimed

"T" later document published after the international filing date or priority date and not in conflict with the application but cited to understand the principle or theory underlying the invention

"X" document of particular relevance;; the claimed invention cannot be considered novel or cannot be considered to involve an inventive step when the document is taken alone

"Y" document of particular relevance;; the claimed invention cannot be considered to involve an inventive step when the document is combined with one or more other such documents, such combination being obvious to a person skilled in the art

"&" document member of the same patent family

Date of the actual completion of the international search	Date of mailing of the international search report
21 June 2024	11/07/2024

Name and mailing address of the ISA/	Authorized officer
European Patent Office, P.B. 5818 Patentlaan 2 NL - 2280 HV Rijswijk Tel. (+31-70) 340-2040, Fax: (+31-70) 340-3016	Rick, Kai

1

Form PCT/ISA/210 (second sheet) (April 2005)

INTERNATIONAL SEARCH REPORT

International application No
PCT/US2023/084799

C(Continuation). DOCUMENTS CONSIDERED TO BE RELEVANT

Category*	Citation of document, with indication, where appropriate, of the relevant passages	Relevant to claim No.
A	US 2020/069920 A1 (GOSHAYESHGAR MOJAN [US]) 5 March 2020 (2020-03-05) paragraphs [0038] - [0047]; figures 1,2	1-24

1

INTERNATIONAL SEARCH REPORT

International application No.
PCT/US2023/084799

Box No. II Observations where certain claims were found unsearchable (Continuation of item 2 of first sheet)

This international search report has not been established in respect of certain claims under Article 17(2)(a) for the following reasons:

1. [X] Claims Nos.: 25-28
because they relate to subject matter not required to be searched by this Authority, namely:
see FURTHER INFORMATION sheet PCT/ISA/210

2. [ ] Claims Nos.:
because they relate to parts of the international application that do not comply with the prescribed requirements to such an extent that no meaningful international search can be carried out, specifically:

3. [ ] Claims Nos.:
because they are dependent claims and are not drafted in accordance with the second and third sentences of Rule 6.4(a).

Box No. III Observations where unity of invention is lacking (Continuation of item 3 of first sheet)

This International Searching Authority found multiple inventions in this international application, as follows:

1. [ ] As all required additional search fees were timely paid by the applicant, this international search report covers all searchable claims.

2. [ ] As all searchable claims could be searched without effort justifying an additional fees, this Authority did not invite payment of additional fees.

3. [ ] As only some of the required additional search fees were timely paid by the applicant, this international search report covers only those claims for which fees were paid, specifically claims Nos.:

4. [ ] No required additional search fees were timely paid by the applicant. Consequently, this international search report is restricted to the invention first mentioned in the claims;; it is covered by claims Nos.:

Remark on Protest

[ ] The additional search fees were accompanied by the applicant's protest and, where applicable, the payment of a protest fee.

[ ] The additional search fees were accompanied by the applicant's protest but the applicable protest fee was not paid within the time limit specified in the invitation.

[ ] No protest accompanied the payment of additional search fees.

FURTHER INFORMATION CONTINUED FROM PCT/ISA/ 210

Continuation of Box II.1

Claims Nos.: 25-28

For the assessment of the present claims 25-28 on the question whether they are industrially applicable, no unified criteria exist in the PCT Contracting States. The IPEA therefore is not required to carry out search and examination on these claims (Cf. Rule 67.1(iv) PCT). The patentability may be dependent upon the formulation of the claims. The EPO, for example, does not recognize as industrially applicable the subject-matter of claims to methods of treatment of the human or animal body by surgery or therapy and diagnostic methods practised on the human or animal body. The above claims pertain to a method for site specific delivery of pharmaceutical agents in a space within a subject, comprising placing and navigating a scoping section of a scoping device in a body cavity, in particular the lungs of a patient. Thereby said method is rendered surgical, so that it might not be regarded as an invention susceptible of industrial application.

INTERNATIONAL SEARCH REPORT

Information on patent family members

International application No
PCT/US2023/084799

Patent document cited in search report	Publication date	Patent family member(s)	Publication date
US 2021162185 A1	03-06-2021	AU 2020397886 A1	16-06-2022
		CA 3163509 A1	10-06-2021
		CN 114938625 A	23-08-2022
		EP 4069100 A1	12-10-2022
		JP 2023504628 A	06-02-2023
		KR 20220112272 A	10-08-2022
		US 2021162185 A1	03-06-2021
		WO 2021113125 A1	10-06-2021
US 2021001099 A1	07-01-2021	EP 2300094 A1	30-03-2011
		EP 2644225 A1	02-10-2013
		EP 3875137 A1	08-09-2021
		US 2009299327 A1	03-12-2009
		US 2009299374 A1	03-12-2009
		US 2009299401 A1	03-12-2009
		US 2009301643 A1	10-12-2009
		US 2009306589 A1	10-12-2009
		US 2010076437 A1	25-03-2010
		US 2010152654 A1	17-06-2010
		US 2010241152 A1	23-09-2010
		US 2010241153 A1	23-09-2010
		US 2010241178 A1	23-09-2010
		US 2011198019 A1	18-08-2011
		US 2014324092 A1	30-10-2014
		US 2017050004 A1	23-02-2017
		US 2019269892 A1	05-09-2019
		US 2021001099 A1	07-01-2021
		WO 2009149108 A1	10-12-2009
US 2023149672 A1	18-05-2023	CN 113727750 A	30-11-2021
		EP 3927410 A1	29-12-2021
		EP 4223352 A2	09-08-2023
		JP 2022521000 A	04-04-2022
		JP 2023052847 A	12-04-2023
		US 2021361918 A1	25-11-2021
		US 2023149672 A1	18-05-2023
		WO 2020172560 A1	27-08-2020
US 2020069920 A1	05-03-2020	EP 3429674 A2	23-01-2019
		US 2017266419 A1	21-09-2017
		US 2020069920 A1	05-03-2020
		WO 2017160781 A2	21-09-2017