May 22, 1923. 1,455,860

F. H. BROWN

REGULATING APPARATUS

Filed April 16, 1920 2 Sheets-Sheet 1

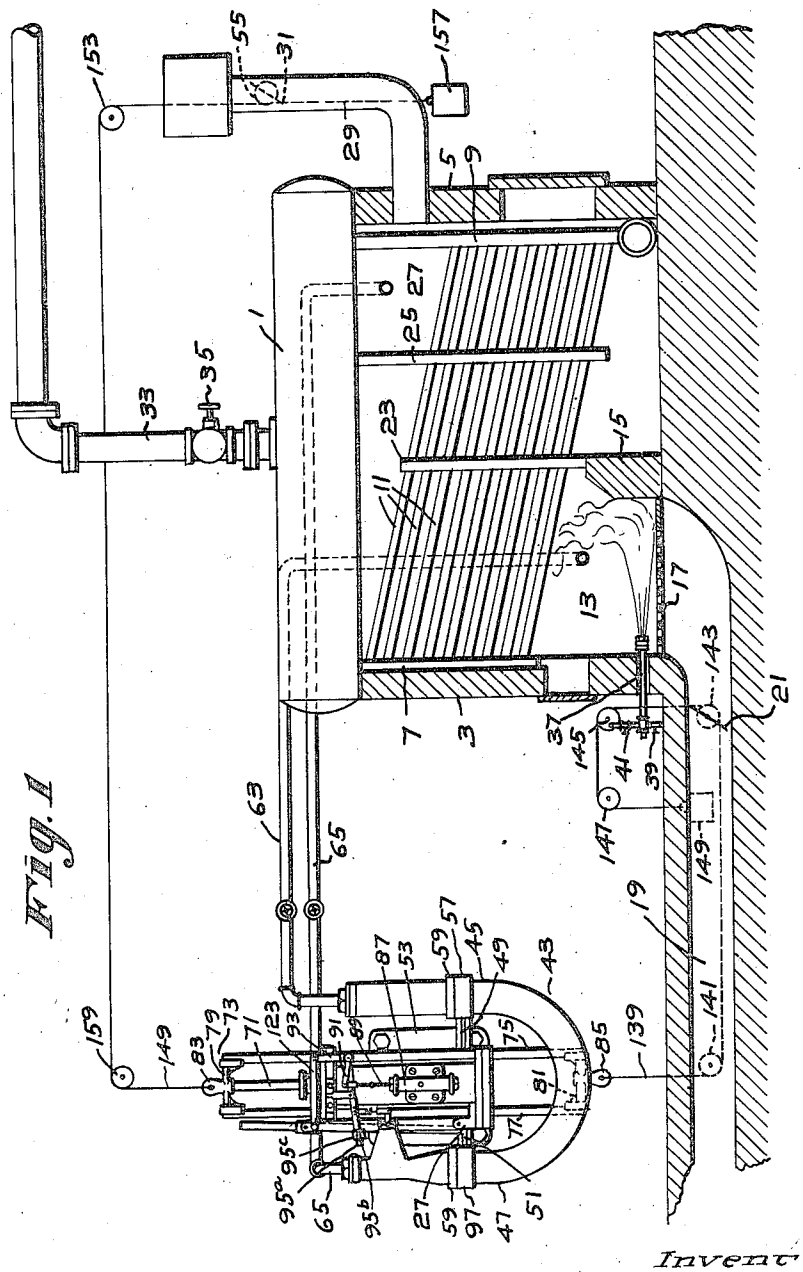

Fig. 1

Inventor:
Francis H. Brown
by Robt. D. Harris
Attorney

May 22, 1923. 1,455,860

F. H. BROWN

REGULATING APPARATUS

Filed April 16, 1920 2 Sheets-Sheet 2

Fig. 2

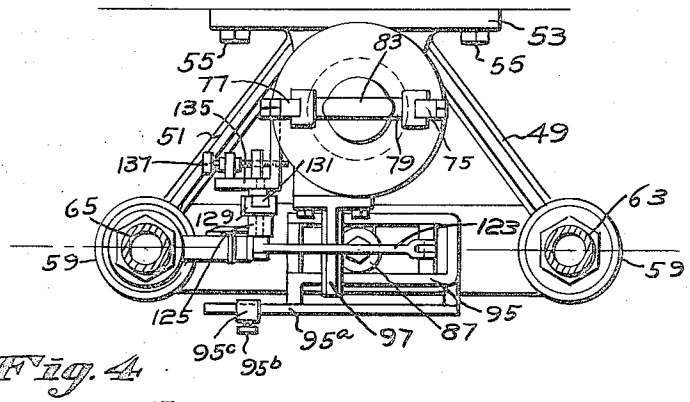

Fig. 4

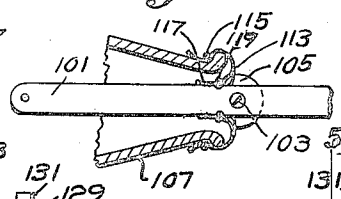

Fig. 5

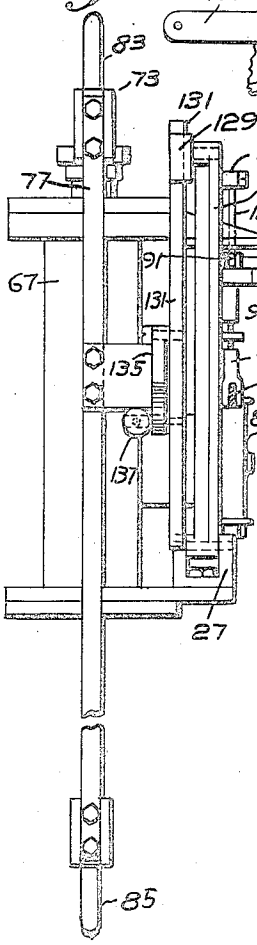

Fig. 3

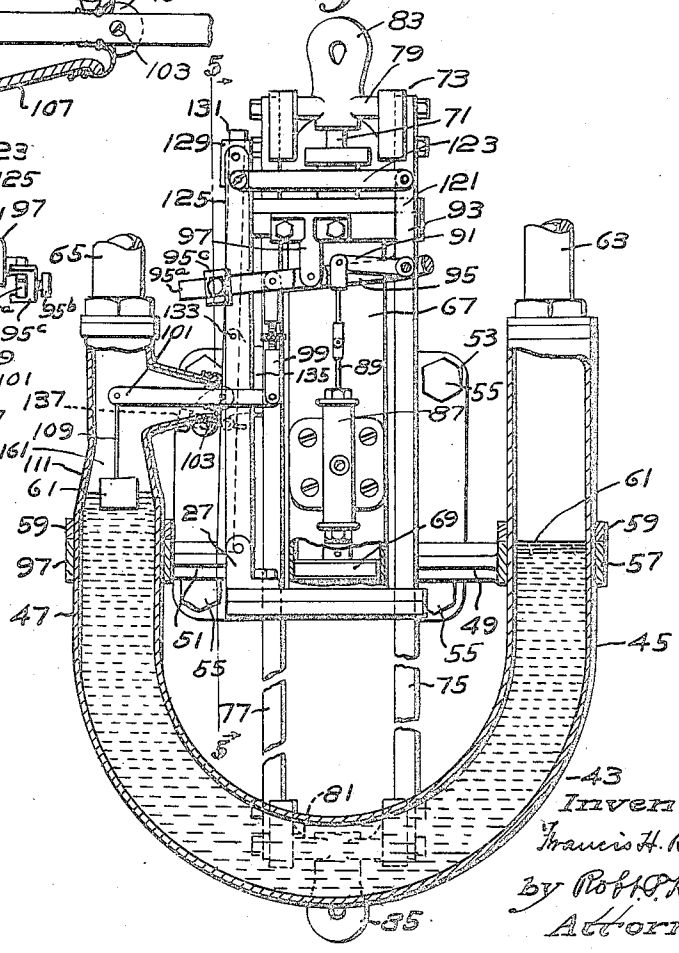

Inventor:
Francis H. Brown
by Robt. P. Harris
Attorney

Patented May 22, 1923. 1,455,860

UNITED STATES PATENT OFFICE.

FRANCIS H. BROWN, OF GLENOLDEN, PENNSYLVANIA, ASSIGNOR TO PETROLEUM HEAT AND POWER COMPANY, OF BOSTON, MASSACHUSETTS, A CORPORATION OF DELAWARE.

REGULATING APPARATUS.

Application filed April 16, 1920. Serial No. 374,395.

To all whom it may concern:

Be it known that I, FRANCIS H. BROWN, a citizen of the United States, residing at Glenolden, in the county of Delaware and State of Pennsylvania, have invented an Improvement in Regulating Apparatus, of which the following description, in connection with the accompanying drawings, is a specification, like characters on the drawings representing like parts.

The invention to be hereinafter described relates to regulating apparatus which may be responsive to variations in pressure however produced, such, for example, as by changes in static or kinetic pressures of a fluid, or temperature or electrical changes, or changes in the composition of fluids whether gaseous or liquid. The apparatus may be sensitive to slight changes, and control the supply or motive fluid to a motor which may operate with sufficient power to operate any instrumentality desired.

In the present instance of the invention, the apparatus is employed in connection with a furnace, and is responsive to variations in the pressure in the furnace, and serves to regulate combustion conditions, such, for example, as the supply of air admitted to the furnace for promoting the combustion of fuel therein.

Any suitable fuel may be employed in the furnace, solid, liquid or gaseous. In the present instance of the invention, fuel oil is employed. This fuel oil may be delivered into the combustion chamber of the furnace by a burner of the usual construction. The oil may be atomized by compressed air, steam or other suitable fluid, and the atomization may occur either internally of the burner or beyond the tip of the burner as desired.

Variation in the load or demand on the furnace will necessitate variation in the supply of oil and atomizing fluid delivered into the combustion chamber. If the supply of oil and atomizing fluid increases, the pressure in the furnace will increase, and on the other hand, if the supply of oil and atomizing fluid decreases, the pressure in the furnace will decrease. Also, the supply of air should be increased or decreased with increase or decrease of the supply of fuel, in order to supply the proper amount of oxygen for efficient combustion of the fuel.

One of the purposes of the present invention, therefore, is to provide simple and efficient apparatus which shall be automatically responsive to variations in the pressure in the furnace to regulate the supply of air thereto.

In a steam generator, the gases of combustion may pass from the combustion chamber, cross and recross water tubes as directed by baffles to the uptake. The draft is stronger in the furnace adjacent the uptake than in the combustion chamber, owing to the frictional effect of the water tubes and baffle plates on the gases of combustion in the course of transit from the combustion chamber to the uptake. Therefore, the pressure in the furnace adjacent the uptake will be greater than in the combustion chamber, it being understood that these pressures are negative pressures, since they are less than atmospheric pressure.

Another purpose of the invention is to provide regulating apparatus which shall be responsive to the differential pressure in the furnace in the combustion chamber and adjacent the uptake.

With the aforesaid and other purposes in view, the character of the invention will be best understood by reference to the following description of one good form thereof shown in the accompanying drawings, wherein:

Fig. 1 is a vertical longitudinal section through a steam generator equipped with regulating apparatus embodying the invention, the latter being shown in side elevation;

Fig. 2 on an enlarged scale is a plan of the regulating apparatus shown in Fig. 1;

Fig. 3 is a vertical section taken on line 3—3 of Fig. 2;

Fig. 4 is a detail to be referred to; and

Fig. 5 is a vertical section taken on line 5—5 of Fig. 3.

Referring to the drawings, the regulating apparatus embodying the invention may be applied to a furnace of any suitable construction and for any purpose. In the present instance it is applied to a furnace of a steam generator of the well known Babcock & Wilcox type. This generator may comprise a drum 1 supported on a front wall 3 and a rear wall 5, and may communicate with a front header 7 and a rear header 9 connected by a bank of inclined water tubes 11. Beneath the water tubes adjacent the

front of the generator is the combustion chamber 13 having the bridge wall 15 and a checker-work grate 17. Air under forced or natural draft may pass through a passage 19 up through the openings in the checker-work 17 into the combustion chamber 13, and the supply of air may be regulated by a damper 21. The gases of combustion may flow from the combustion chamber across the water tubes 11, and be caused to recross the same by baffle plates 23 and 25. The gases pass thence through a chamber 27 to the uptake 29 which may be provided with a damper 31. The steam generated may be delivered from the drum 1 through a steam main 33 provided with a valve 35.

As stated, any suitable fuel may be employed, in the present instance, fuel oil is used and supplied by a burner 37 of well understood construction, and therefore, unnecessary to show and describe in detail herein. The oil may be delivered to the burner through a pipe 39, and steam or other atomizing agent may be delivered to the burner through a pipe 41.

The regulating apparatus shown herein as one good form of the invention, comprises a manometer 43 (Figs. 2 and 3) in the form of a U-tube having legs 45 and 47. Any suitable support may be provided for the U-shaped tube, in the present instance, in the form of arms 49 and 51 projecting from a plate 53 adapted to be secured by bolts 55 to a wall or other suitable means. At the outer ends of the arms 49 and 51 are rings 57 encircling the legs of the U-tube. Collars 59 fast on said legs are adapted to rest upon the rings 57 and prevent downward movement of said legs through said rings.

The U-tube may be partially filled with water or other appropriate liquid, and where water is employed, films of oil 61 may be placed on the surface of the water columns standing in the legs 45 and 47 to prevent evaporation of the water.

The manometer may be subjected to the pressure or pressures in the furnace. To accomplish this, in the present instance, the leg 45 of the manometer is connected by a pipe 63 with the combustion chamber 13, and the other leg 47 is connected by a pipe 65 with the chamber 27 in the furnace adjacent the uptake. The construction is such that when the furnace is in operation, the differential negative pressure or suction effect in the combustion chamber and in the chamber adjacent the uptake will cause the water column in the leg 45 to lower, and the water column in the leg 47 to rise. The levels of these columns will vary on variations in the differential pressure in the combustion chamber and in the chamber adjacent the uptake.

The present invention contemplates the utilization of the variation in the levels of the water columns in the manometer to operate means for controlling combustion conditions. The force of the differential pressure is slight, and therefore, it is desirable to employ another source of fluid pressure to furnish power for operating the regulating means, and to utilize the manometer to control the supply of the fluid pressure thereto.

In the present instance of the invention, a fluid pressure operated motor is employed, comprising a cylinder 67 conveniently mounted on the plate 53 referred to, between the arms 49 and 51 and offset from the manometer tube. This cylinder contains a piston 69 having a rod 71 connected to a frame 73 comprising side members 75 and 77 which may be guided through extensions on the heads of the cylinder. The ends of the side members 75 and 77 may be connected by cross members 79 and 81, and the former may be connected to the piston rod 71. The cross members 79 and 81 may be provided with eyes 83 and 85 which may be connected to any instrumentality for regulating combustion conditions as desired.

Compressed air or other motive fluid may be conducted from any suitable source to the cylinder 67. To control the admission of compressed air to said cylinder, a pilot valve 87 of usual construction may be provided, and this pilot valve may be controlled by suitable means operated by the manometer. This means, in the present instance, comprises a stem 89 connected to the pilot valve, and also connected to an arm 91 of a bell-crank lever 93 pivotally mounted on a lever 95 fulcrumed on a bracket 97 conveniently mounted on the cylinder 67. The lever 95 may be connected by an extensible link 99 with one end of a lever 101 fulcrumed intermediate its ends on a pin 103 (Fig. 4) carried by a bracket 105 on a casing 107 projecting laterally from the manometer tube. The opposite end of the lever 101 may be connected by a link 109 with a float 111 supported by the water column in the manometer leg 47.

Suitable means may be provided to prevent leakage from the manometer tube through the casing 107 adjacent the lever 101. To accomplish this, in the present instance, a movable closure conveniently in the form of a web 113 (Fig. 4) of rubber or other suitable material may be provided having its marginal portion embracing the mouth of the casing 107, and secured thereto by a ring 115. This web may have a neck 117 embracing the lever 101 and secured thereto by a ring 119. The construction is such that the lever 101 may readily rock without substantial interference from the web 113, and the latter will serve to prevent leakage at the mouth of the neck around said lever.

The long arm 121 of the bell-crank 93 re-

ferred to, may be connected by a link 123 with the upper end of a standard 125 having its lower end pivotally mounted on a bracket 127 conveniently secured to an extension of the lower head of the cylinder 67. Pivotally connected to the upper end of the standard 125 is a shoe 129, and an inclined bar 131 is adapted to slide in said shoe. This bar is fulcrumed on a pivot 133 on a bracket 135 secured to the side member 77 of the frame 73 referred to, which is reciprocated by the piston 69. The inclined bar 131 may be set at different angles with respect to the side member 77 by an adjusting screw 137. The weight of the bell-crank and parts connected thereto, tends to rock the lever 95 in a clockwise direction. Suitable means may be provided to counterbalance the load on the lever tending to rock the lever in such direction. In the present instance, this means is in the form of an arm 95[a] carried by the lever 95 and supporting a counterbalance weight 95[b] secured by a hand screw 95[c], the construction being such that the weight may be adjusted along the arm 95[a] to proper position to produce the counterbalancing effect required, and thereby reduce the work of the float 111 in operating the pilot valve.

In operation, the differential pressure in the combustion chamber and in the chamber 27 of the furnace will be transmitted through the pipes 63 and 65 to the legs of the manometer, and since the pressure or suction effect in the chamber 27 is greater than in the combustion chamber, the water column in the manometer leg 45 will be lowered, and the water column in the manometer leg 47 will be raised. This will cause the float 111 to move upward and rock the lever 101, and since the latter is connected by the link 99 to the lever 95, the latter will be rocked and move the bell-crank 93 bodily downward, thereby shifting the pilot valve and admitting compressed air into the cylinder 67. This will cause the piston 69 and the frame 73 to move, and the movement of said frame may be employed to impart movement to the means for regulating combustion conditions. The movement of the frame 73 will cause the inclined bar 131 to slide in the shoe 129, and thereby rock the standard 125. The movement of the latter in turn will be transmitted by the link 123 to the arm 121 of the bell-crank, thereby rocking the same in a direction opposite to its previous movement so as to shift the pilot valve and cut off the supply of compressed air to the cylinder. The direction of movement of the piston in the cylinder will depend upon the direction of movement of the float 111 in response to movements of the water columns in the legs of the manometer.

In the present instance of the invention, the reciprocatory movements of the motor actuated frame 73 are employed to control the dampers 21 and 31 in the intake and uptake respectively. To accomplish this, the lower eye 85 of the frame 73 may be connected to a cord 139 (Fig. 1) or other flexible member which may be conducted around a pulley 141 and one or more turns around a pulley 143 connected to the intake damper 31. The cord may pass upward over a pulley 145, horizontally over a pulley 147, and the end of the cord may be connected to a weight 149.

The upper eye 83 of the frame 73 may be connected to a cord 149 or other flexible member which may be passed over a guide pulley 151 and a guide pulley 153, and be wound one or more turns about a pulley 155 connected to the uptake damper 31. The cord may pass thence downward and be connected to a weight 157.

The construction is such that when the piston and frame move upward, the cords 139 and 149 will be shifted, and the dampers in the intake and uptake will be shifted so as to increase the supply of air through the furnace. On the other hand, when the frame moves downward it will shift the cords and the dampers in the opposite direction so as to diminish the supply of air admitted to the furnace.

When the amount of fuel and atomizing fluid delivered thereby into the furnace is increased, it will increase the pressure in the furnace and the differential pressure in the combustion chamber and in the chamber 27 adjacent the uptake, and this increase in the pressure will cause the water in the leg 47 of the manometer to move upward. This will raise the float 111 which will operate through the system of levers described to shift the pilot valve and operate the motor and the frame actuated thereby so as to shift the dampers and increase the amount of air delivered to the furnace in proper proportion to the increase in the fuel delivered to the furnace. If, on the other hand, the amount of oil and atomizing fluid delivered to the furnace is reduced, the manometer will be responsive to the diminished pressure in the furnace and operate the motor so as to shift the dampers to reduce the amount of air admitted to the furnace. Thus, the supply of air to the furnace is automatically regulated in response to the pressure in the furnace and in response to variations in the amount of fuel supplied to the furnace.

In some instances it may be desirable to cause the water column in the leg 47 of the manometer to accelerate the upward movement of the float so as more promptly to operate the dampers in response to increase of pressure in the furnace. To accomplish this, the portion 161 of the leg 47 of the manometer in which the float is mounted, may be tapered or gradually reduced upward.

On upward movement of the water column in this tapered portion, the upper surface of the water will be caused to move more rapidly than the movement of the surface of the water column in the other leg 45 of the manometer. This may have the effect of producing a substantial movement of the float in response to slight variations in the pressure in the furnace, and therefore, secure more prompt operation of the dampers in response to increase in the pressure of the furnace.

While the manometer regulating apparatus has been shown and described herein more particularly with reference to the control of the dampers for the furnace, it will be understood that other instrumentalities for regulating combustion conditions may be operated thereby.

It will be understood that the invention is not limited to the specific embodiment shown, and that various deviations may be made therefrom without departing from the spirit and scope of the appended claims.

What is claimed is:—

1. The combination of a furnace having a combustion chamber, means for controlling the supply of air to the combustion chamber, means for controlling the passage of the gases of combustion from the combustion chambers, a regulator responsive to differential pressures, means for subjecting the regulator to the difference in pressure between two points within the furnace, and power-operated means controlled by the regulator and adapted to regulate the air controlling means and the controlling means for the gases of combustion.

2. The combination of a furnace having a combustion chamber, means for controlling the supply of air to the combustion chamber, means for controlling the passage of the gases of combustion from the combustion chamber, a manometer, means to subject the manometer to the difference in pressure between two points within the furnace, and power-operated means controlled by the manometer and adapted to regulate the air controlling means and the means for controlling the passage of the gases of combustion.

3. The combination of a furnace having a combustion chamber, means for controlling the supply of air to the combustion chamber, means for controlling the passage of the gases of combustion from the combustion chamber, a manometer, means for subjecting the manometer to variations in the pressure in the furnace, and power means controlled by the manometer and operable to regulate the air controlling means and the means for controlling the passage of the gases of combustion.

4. The combination of a furnace having a combustion chamber, means for controlling the supply of air to the combustion chamber, means for controlling the passage of the gases of combustion from the combustion chamber, a manometer comprising a U-tube having a liquid column therein responsive to pressure changes, means connecting the ends of the U-tube with different points within a furnace to subject the liquid to variations in the pressure in the furnace, a float supported by the liquid, and a motor controlled by the movement of said float and adapted to regulate the air controlling means and the controlling means for the gases of combustion.

5. The combination of a furnace, a manometer comprising a U-tube having a liquid column therein responsive to pressure changes and having a lever receiving housing extending laterally from one of the legs of the U-tube, means connecting the ends of the U-tube with different points within the furnace to subject the liquid to variations in the pressure in the furnace, a float supported by the liquid, a lever pivotally mounted in said housing and having an end operatively connected to the float to be actuated by the latter, and a motor controlled by the movement of said lever and adapted to regulate the air controlling means and the controlling means for the gases of combustion.

6. The combination of a furnace, a manometer comprising a U-tube having a liquid column therein responsive to pressure changes and having a lever receiving housing extending laterally from one leg of the U-tube, means connecting the ends of the U-tube with different points within the furnace to subject the liquid to variations in the pressure in the furnace, a float supported by the liquid, a lever extending into said housing and having an end operatively connected to the float to be actuated by the latter, a motor controlled by the movement of said lever and adapted to regulate the air controlled means and the controlling means for the gases of combustion, and a flexible web embracing the lever to prevent leakage of pressure between the lever and said housing.

In testimony whereof, I have signed my name to this specification.

FRANCIS H. BROWN.