(12) UK Patent Application (19) GB (11) 2 212 715 (13) A

(43) Date of A publication 02.08.1989

(21) Application No 8827622.5

(22) Date of filing 25.11.1988

(30) Priority data
(31) 8715724 (32) 27.11.1987 (33) DE

(51) INT CL⁴
A47L 1/06

(52) UK CL (Edition J)
A4F FAR F52

(56) Documents cited
GB 1175831 A GB 0543961 A

(58) Field of search
UK CL (Edition J) A4F FAR FFBD FFBH
INT CL⁴ A47L, B60S

(71) Applicant
Koralle Sanitarprodukte GmbH & Co

(Incorporated in the Federal Republic of Germany)

Industriegelande Hollwiesen, 4973 Vlotho,
Federal Republic of Germany

(72) Inventors
Karl-Heinz Bublitz
Reinhard Oepping

(74) Agent and/or Address for Service
D Young & Co
10 Staple Inn, London, WC1V 7RD, United Kingdom

(54) Device for cleaning overlapping areas on sliding doors

(57) A device (10) for cleaning overlapping areas of sliding doors e.g. of bath or shower cubicles comprises a flexible cleaning blade (12) e.g. of rubber mounted on a handle part provided with a grip (11), the cleaning blade having an elongate profile with at least two symmetrically disposed wiper lips (14). The blade may be rotatably mounted on spindle (15). The cleaning blade can be introduced without difficulty between the overlapping areas of glass sliding doors and then moved up or down to cause the wiper lips to remove accumulated dirt.

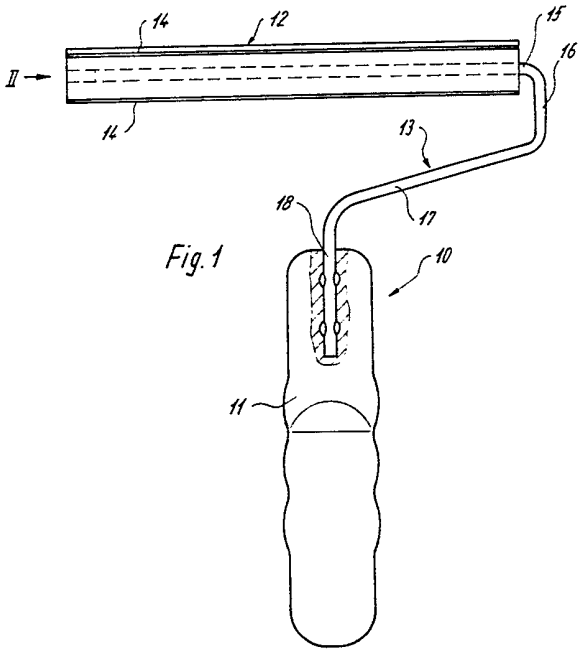

Fig. 1

GB 2 212 715 A

2212715

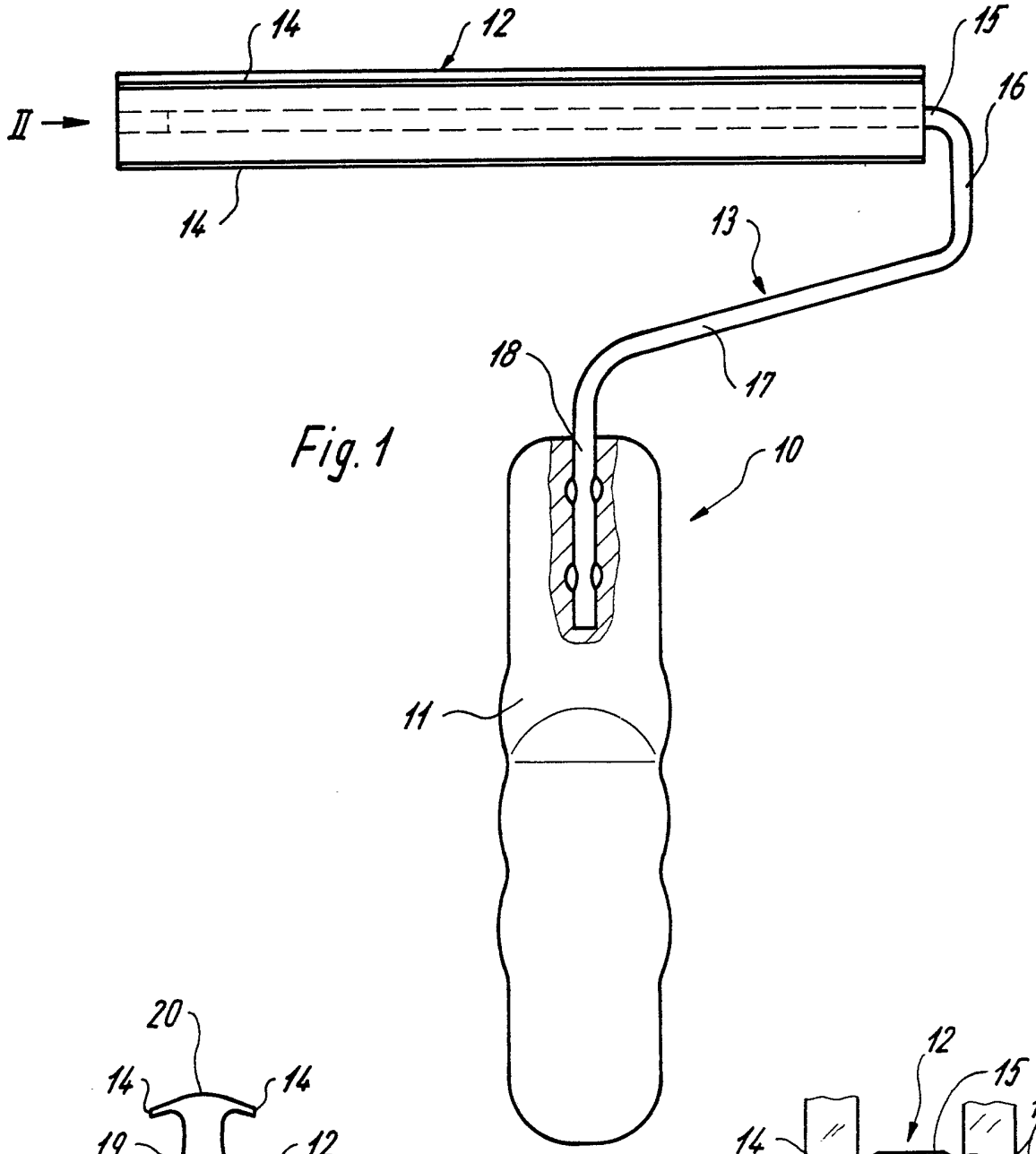

Fig. 1

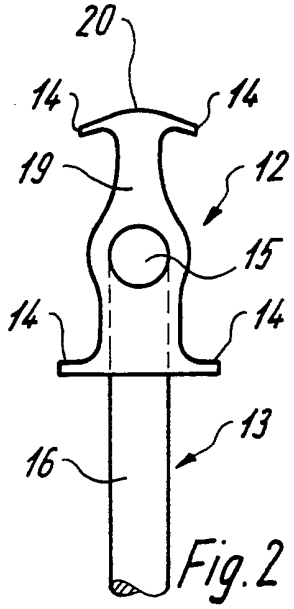

Fig. 2

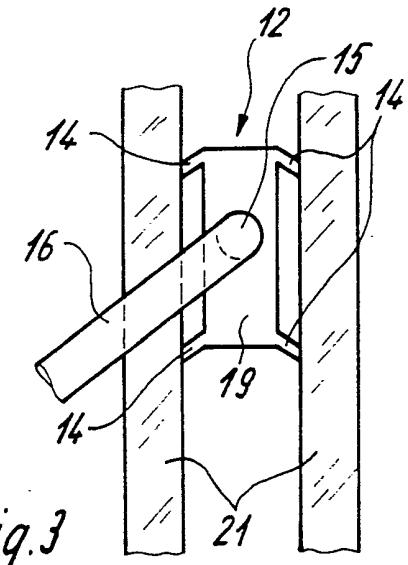

Fig. 3

2212715

A CLEANING DEVICE FOR CLEANING OVERLAPPING AREAS ON SLIDING DOORS

The invention relates to a cleaning device for cleaning overlapping areas on sliding doors, particularly though not exclusively sliding doors of bath or shower cubicles.

In the case of sliding doors, such as sliding doors of bath or shower cubicles, cleaning of overlapping areas is particularly difficult in that these overlapping areas are extremely difficult of access. In many cases, therefore, a thorough cleaning of these areas is either entirely dispensed with or an attempt is made, using tools which are really unsuitable, provisionally to clean these areas to which access is difficult.

According to the invention there is provided a cleaning device for cleaning overlapping areas of sliding doors comprising a cleaning blade of rubber or other flexible material mounted on a handle part provided with a grip, the cleaning blade having an elongate profile with at least two symmetrically disposed wiper lips.

Such a cleaning device can facilitate thorough cleaning of the overlapping area of sliding doors since the cleaning blade can without difficulty be introduced into the overlapping areas and then moved back and forth along them with the successful result that the wiper lips remove any dirt which is present in the part which is otherwise difficult of access.

Preferably, the cleaning blade is rotatably mounted on a spindle on the handle part.

This can provide the advantage that handling the entire cleaning device is simplified because, during the upwards and downwards movement of the entire cleaning instrument, the handle part can be rotated in relation to the actual cleaning blade.

The invention is diagrammatically illustrated by way of example in the accompanying drawings, in which:

Figure 1 is a partly sectional view of a cleaning device according to a first embodiment of the invention;

Figure 2 is a fragmentary view taken in the direction of arrow II in Figure 1; and

Figure 3 shows a second embodiment of a cleaning device according to the invention.

Referring to Figures 1 and 2, a cleaning device 10 for cleaning overlapping areas of sliding doors, particularly glass sliding doors of bath or shower cubicles comprises a grip 11, a cleaning blade 12 and a carrier 13 which is rigidly connected to the grip 11, together with which it forms a handle and by means of which the cleaning blade 12 can be introduced into the overlapping areas of sliding doors which are to be cleaned.

The cleaning blade 12 itself is produced from a flexible material, preferably from rubber, and has an elongate profile which is provided with at least two symmetrically disposed wiper lips 14, as can be seen particularly in Figure 2.

The cleaning blade 12 is mounted on a spindle 15 of the carrier 13, in fact it is ideally mounted in both rotatable and also interchangeable manner, i.e. the cleaning blade 12 is separably connected to the spindle 15 so simplifying the exchange of a worn cleaning blade 12.

The carrier 13 extends integrally with the spindle 15 and has in the region of its connection to the spindle 15 a first web portion 16 which extends away from the spindle 15 in the direction of the grip 11, merges into a second web portion 17 which in turn extends crosswise to the longitudinal axis of the grip 11 and merges into an end part 18 of the carrier 13 which is form-lockingly anchored in the grip 11.

The grip 11 is preferably made from synthetic plastics material, so making it possible to cast the end portion 18 of the carrier 13 form-lockingly in the grip 11.

As Figure 1 shows in particular, the longitudinal axis of the grip 11 extends at or virtually at a right-angle to the longitudinal axis of the cleaning blade 12, in fact aligned substantially with the middle of the elongate cleaning blade 12.

The first web portion 16 which extends from the spindle 15 in the direction of the grip 11 provides a relatively large clearance between the cleaning blade 12 and the second web portion 17 of the carrier 13 so that the cleaning blade 12 can be pushed comparatively far in between two overlapping sliding doors.

The carrier 13 and the spindle 15 are preferably made together in one piece, from metal.

Figure 2 shows that the cleaning blade 12 has in cross-section a comparatively narrow middle web 19 which includes a bore for receiving the spindle 15. Integrally moulded on the outer edges of the middle web 19 are the wiper lips 14, one pair of the wiper lips 14 being moulded on the end of a convex zone 20, which has an overall width slightly less than the width of a second pair of wiper lips 14 integrally mounted at opposite edge of the cleaning blade 12.

Figure 3 shows an embodiment of cleaning device in which the cleaning blade 12 is of substantially rectangular cross-section and has on its longitudinal edges wiper lips 14 which are chamfered in the same direction and which, all in all, are also of the same width. Here, too, the middle web 19 is provided with a bore for receiving the spindle 15 for fitment of the cleaning blade 12 on the spindle 15.

The embodiment shown in Figures 2 and 3 are representative of manifold embodiments of cleaning blade 12. It is evident that geometrical cross-sectional shape and width proportions of the pairs of wiper lips may be configured according to any specific application.

In Figure 3, reference numeral 21 denotes overlapping sliding doors overlapping areas of which can be cleaned especially without problem by means of the cleaning device shown.

CLAIMS

1. A cleaning device for cleaning overlapping areas of sliding doors comprising a cleaning blade of rubber or other flexible material mounted on a handle part provided with a grip, the cleaning blade having an elongate profile with at least two symetrically disposed wiper lips.

2. A cleaning device according to claim 1, in which the cleaning blade is rotatably mounted on a spindle of the handle part.

3. A cleaning device according to claim 2, in which the spindle of the handle part extends substantially at a right-angle to the longitudinal axis of the grip.

4. A cleaning device according to any one of claims 1 to 3, in which the grip is aligned substantially with a middle position on the elongate cleaning blade.

5. A cleaning device according to claim 2 or claim 3 or claim 4 when appendant to claim 2, in which the spindle is connected to the grip by a carrier part formed in one piece with one of the ends of the spindle, the carrier part being shaped into a plurality of bends and then terminating in the grip.

6. A cleaning device according to claim 5, in which the grip is produced from synthetic plastics material and the end portion of the carrier part which terminates in the grip is form-lockingly anchored in the grip.

7. A cleaning device according to claim 6, in which the carrier part has in the region at which it joins the spindle, a first web portion which extends away from the spindle in the direction of the grip and which merges into a second web portion which extends crosswise to the longitudinal axis of the grip and merges into the end portion of the carrier part which is anchored in the grip.

8. A cleaning device according to claim 2 or any one of claims 3 to 7 when appendant to claim 2, in which the cleaning blade is separably connected to the spindle.

9. A cleaning device according to claim 2 or any one of claims 3 to 8 when appendant to claim 2, in which the carrier part and the spindle are produced in one piece, from metal.

10. A cleaning device according to claim 2 or any one of claims 3 to 9 when appendant to claim 2, in which the cleaning blade viewed in cross-section comprises a middle web incorporating a bore for receiving the spindle and having the wiper lips integrally moulded on its outer edges.

11. A cleaning device according to claim 10, in which the pair of wiper lips are integrally moulded at the opposite ends of an arcuate edge of the blade and extend likewise in arcuate fashion with the total width of the wiper lips being slightly narrower than the width of a second pair of wiper lips integrally moulded on the other edge of the middle web.

12. A cleaning device according to claim 10, in which at the outer edges of a cross-sectionally substantially rectangular middle web there are integrally moulded pairs of wiper lips which are of the same total width and which are in each case chamfered over in the same direction.

13. A cleaning device for cleaning overlapping areas of sliding doors substantially as hereinbefore described and illustrated with reference to the accompanying drawings.

Published 1989 at The Patent Office, State House, 66 71 High Holborn, London WC1R 4TP Further copies may be obtained from The Patent Office Sales Branch, St Mary Cray, Orpington, Kent BR5 3RD. Printed by Multiplex techniques ltd. St Mary Cray, Kent, Con. 1/87