Jan. 7, 1936. H. B. WHITE 2,026,721

WASHBOARD

Filed Dec. 8, 1934

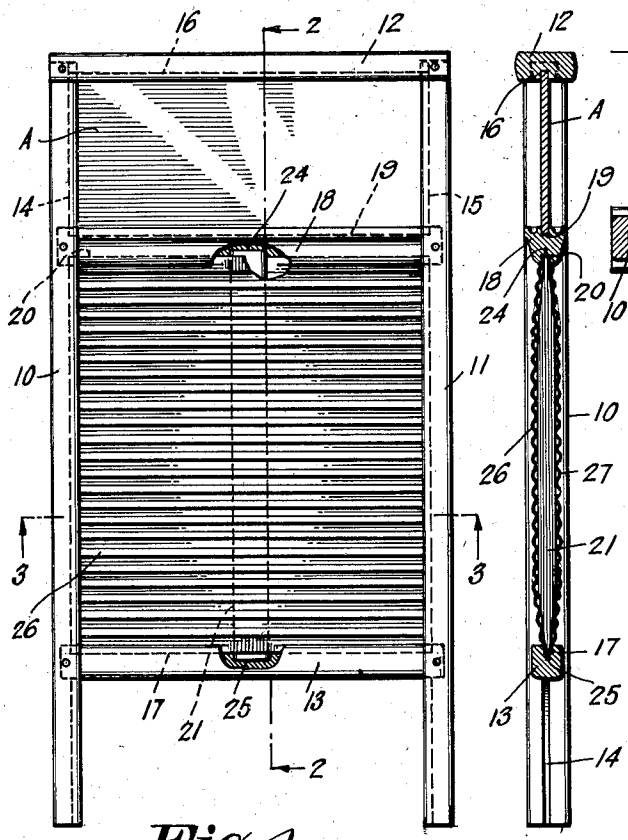

Fig. 1.

Fig. 2.

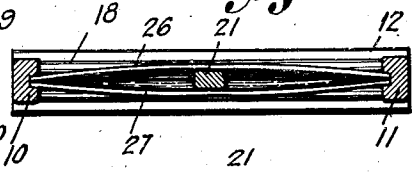

Fig. 3.

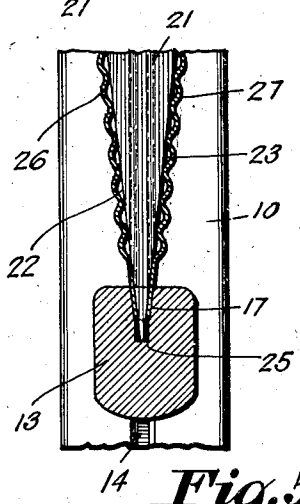

Fig. 5.

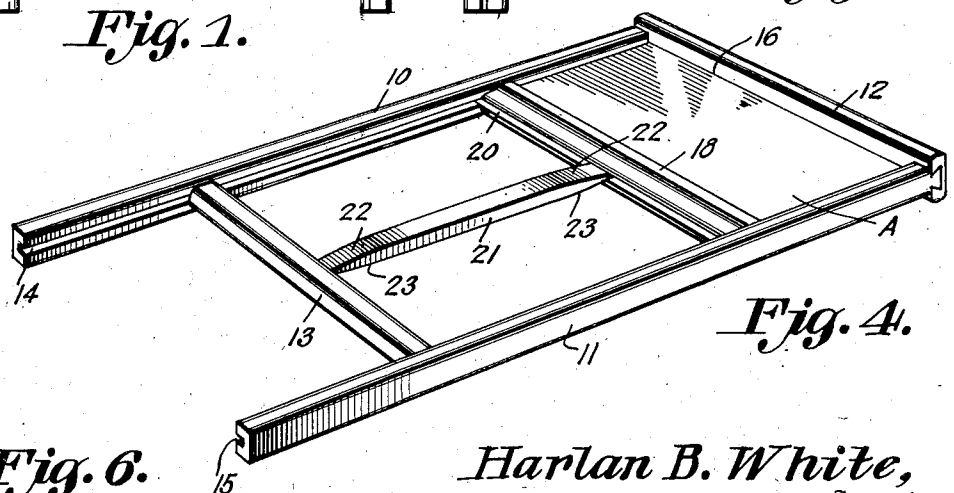

Fig. 4.

Fig. 6.

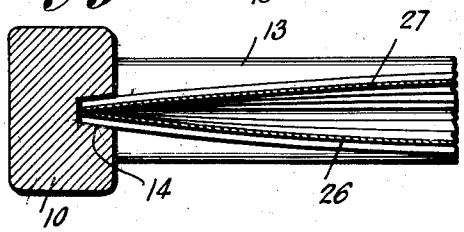

Harlan B. White,
Inventor

By

Attorney

Patented Jan. 7, 1936 2,026,721

UNITED STATES PATENT OFFICE

2,026,721

WASHBOARD

Harlan B. White, Bogalusa, La.

Application December 8, 1934, Serial No. 756,665

1 Claim. (Cl. 68—29)

This invention relates to washboards for laundry purposes, of the reversible or double-faced type and the principal object is to provide a washboard of this type wherein the metal rubbing plates, at opposite sides of the board, will be bowed outwardly both longitudinally and transversely and shall be so arranged as to produce a bracing or strengthening effect when pressure is brought to bear on either of said faces, during the washing process.

In the drawing:

Figure 1 is a front elevation of a washboard made in accordance with the present invention.

Figure 2 is a vertical longitudinal section of the same, on the line 2—2 of Figure 1.

Figure 3 is a horizontal section on the line 3—3 of Figure 1, and

Figure 4 is a perspective view of the frame portion of the board with both rubbing faces removed.

Figure 5 is an enlarged fragmentary detail view, partly in section and partly in elevation, more clearly illustrating certain parts shown in Figure 2.

Figure 6 is a similar view more clearly illustrating the parts shown in Figure 3.

In the drawing, the rectangular frame of the board is composed of the side bars 10 and 11, the top cross bar 12 and the bottom cross bar 13, all of which are centrally rabbeted, from end to end, on their inner sides as shown at 14, 15, 16, and 17, respectively. The usual intermediate cross bar, indicated at 18, is provided with a central longitudinal rabbet on both its upper and lower sides, the former being indicated at 19 and the latter at 20. The ends of the intermediate and bottom cross bars are mortised into the side bars and are securely fastened therein by nailing or in any other suitable manner, and the upper ends of the side bars are dove-tailed into the ends of the top cross bar and fastened therein in a like manner.

The intermediate cross bar 18 constitutes the soap-rest and positioned above it is the brand board A, the edges of which rest within the rabbets of the said cross bar 18, the top cross bar 12 and the side bars 10 and 11, in the usual manner.

Extending longitudinally of the frame, midway between the side bars, is a relatively narrow longitudinal bar 21, the front and rear faces of which converge, for a short distance, at both ends, to provide beveled portions as shown at 22 and 23 in Figure 4 and the outer ends of these converging or beveled portions are fitted in recesses 24 and 25 formed in the confronting rabbeted portions of the intermediate and lower cross members, respectively, and in the paths of their rabbets shown in Figures 2 and 5. Particular attention is called to the fact that these from the ends of the longitudinal bar 21.

The rubbing plates of the board, of which there are two, numbered 26 and 27, are formed of sheets of corrugated metal, of a width greater than the space between the bottom walls of the rabbets in the side bars 10 and 11, and of a length greater than the space between the corresponding parts of the rabbets 17 and 20 in the bottom cross bar 13 and intermediate cross bar 18, respectively.

These rubbing plates are positioned at opposite sides of the longitudinal bar 21 and have their side edges positioned in the rabbets 14 and 15 of the side bars, and impinging against the bottom walls of said rabbets, while their upper and lower edges are correspondingly positioned in the rabbets 20 and 17 of the intermediate and bottom cross members, respectively, and at their centers are firmly clamped between the beveled ends of the bar 21 and the adjacent walls of the recesses 24 and 25, thus providing a rigid structure.

Attention is here called to the fact that the rubbing plates are supported in the center by the bar 21 and that, since the end portions of this bar converge, to provide beveled portions 22 and 23, the rubbing plates are convex both longitudinally and transversely.

As a result of this arrangement, when pressure is brought to bear on a rubbing plate, the same will not give as it will be fully supported by the other rubbing plate and the bar 21, against which it rests, also by its edge portions which rest in the rabbets.

What is claimed is:

A washboard including an open rectangular frame comprising side and cross bars each having a longitudinal rabbet opening inwardly of the frame, each of said cross bars having an inwardly opening recess intermediate its ends and in the path of its rabbet, a longitudinal bar mounted intermediate the side bars and connecting the cross bars, said longitudinal bar having beveled end portions passing through the rabbets of the cross bars and extending into said recesses, and a rubbing plate supported by the longitudinal bar, said rubbing plate having side marginal portions seated in the rabbets of the side members and end marginal portions seated in the rabbets of the cross bars, each of said end marginal portions being centrally clamped between a beveled end portion of the longitudinal bar and a wall of a cross bar rabbet.

HARLAN B. WHITE.