Dec. 29, 1953 S. S. BROWN 2,664,473

SELECTOR SWITCH

Filed Jan. 21, 1952 2 Sheets-Sheet 1

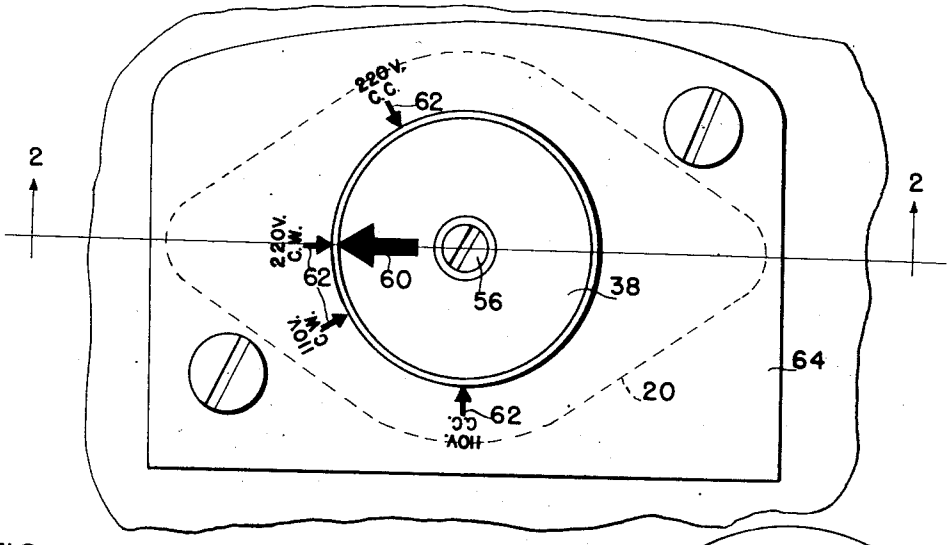

FIG-1

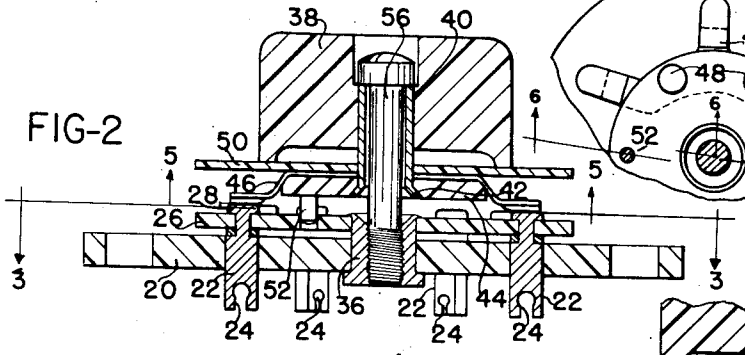

FIG-2

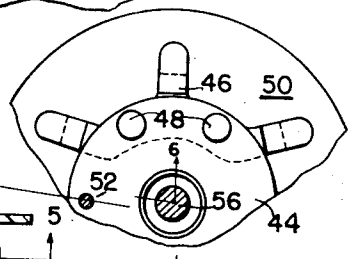

FIG-5

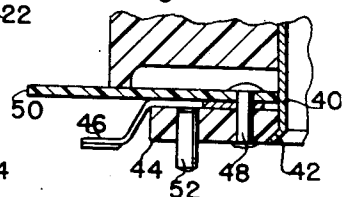

FIG-6

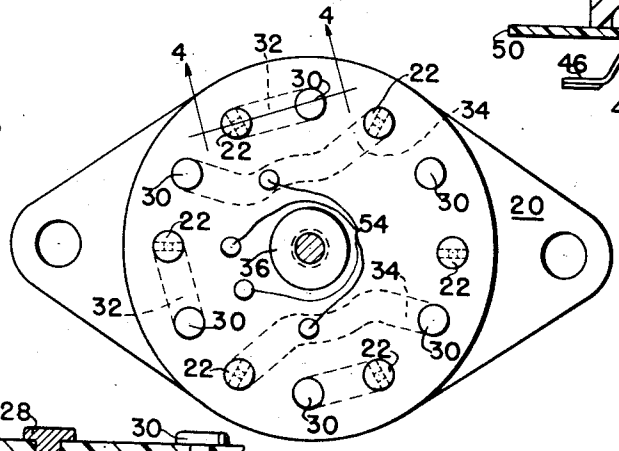

FIG-3

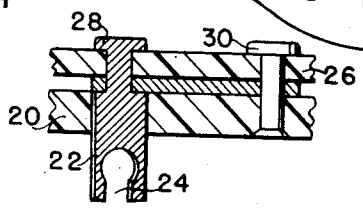

FIG-4

INVENTOR
STEFFEN S. BROWN
BY Toulmin & Toulmin
ATTORNEYS

Dec. 29, 1953 S. S. BROWN 2,664,473

SELECTOR SWITCH

Filed Jan. 21, 1952 2 Sheets-Sheet 2

FIG-7

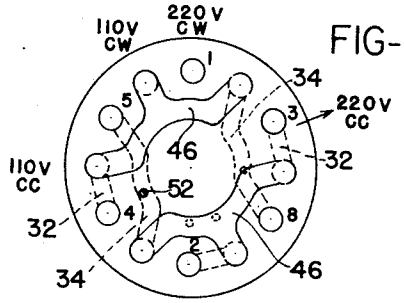

FIG-11

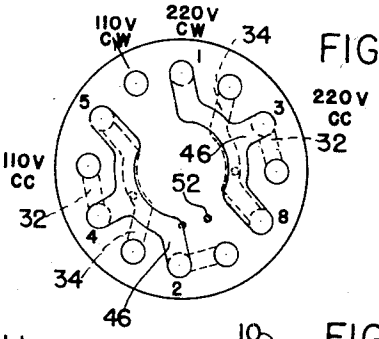

FIG-8

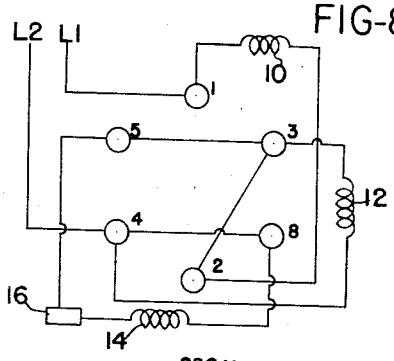

FIG-12

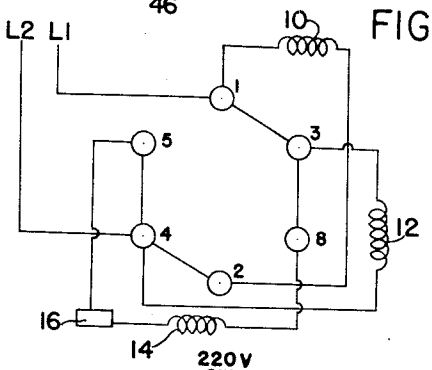

FIG-13

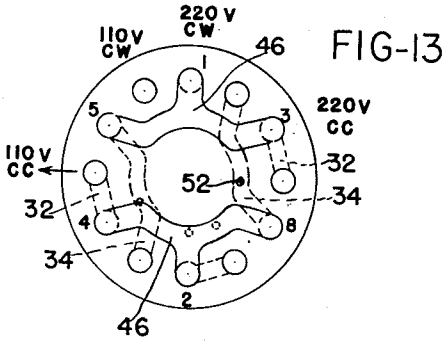

FIG-9

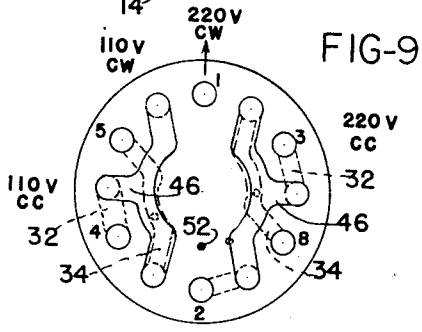

FIG-14

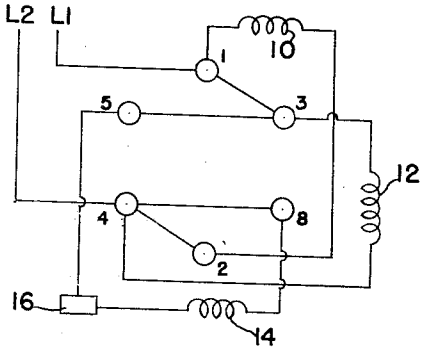

FIG-10

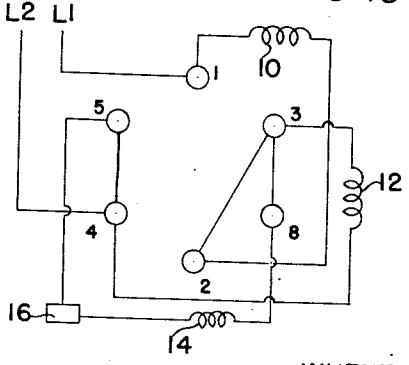

INVENTOR
STEFFEN S. BROWN
BY Toulmin & Toulmin
ATTORNEYS

Patented Dec. 29, 1953

2,664,473

UNITED STATES PATENT OFFICE

2,664,473

SELECTOR SWITCH

Steffen S. Brown, Dayton, Ohio, assignor to The Brown-Brockmeyer Company, Dayton, Ohio, a corporation of Ohio

Application January 21, 1952, Serial No. 267,480

7 Claims. (Cl. 200—11)

1

This invention relates to switches, and particularly to a selector switch for incorporation in the construction of an electric motor to provide for voltage and direction rotation changes of the motor.

The switch of this invention is somewhat similar in function to that of the switch disclosed in my co-pending application, Serial No. 188,454, filed October 4, 1950, now Patent Number 2,619,621, granted November 25, 1952, but represents an improvement and an advance thereover.

The particular type of motor with which the switch of this invention is concerned is a double voltage single phase alternating current motor having a split phase starting winding. In connection with motors of this type, the running windings can be connected in series for operation of the motor at a higher voltage, or in parallel for operation at a lower voltage. The motors will run in either direction of rotation, depending on the manner in which the split phase winding is connected in circuit. Heretofore, it has been customary to effect changes in operating voltage and changes in the direction of rotation of such motors by opening the terminal box mounted on the motor and manually changing the circuit connections therein. Certain obvious disadvantages obtain with an arrangement of this type, because the voltage and direction of rotation for which the motor is connected cannot readily be observed, considerable time is consumed in making the circuit changes, and it is quite easy to make a mistake in making the connections and which mistake could well result in harm to the motor.

The particular object of the present invention is to provide an improved switch construction especially adapted for being incorporated directly into the construction of such a motor, which can be adjusted to effect the circuit changes referred to above, and which indicates the circuit conditions obtaining for each position of the switch.

Another object of the present invention is the provision of a switch of the nature described, which is locked in each of its operating positions.

A still further object is the provision of a switch of the nature described, so arranged that one set of connections must be interrupted before the switch can be adjusted to effect different circuit connections.

It is also an object of this invention to provide an improved switch construction of the nature referred to, having means for maintaining the contact points clean at all times.

2

A still further object is the provision of a switch construction of the nature referred to which can quite readily be manufactured without the use of special machines or special manufacturing techniques.

A still further object is the provision of a switch of the nature referred to especially adapted for being incorporated in a motor construction with a minimum of labor and effort at the time of manufacturing the motor.

These and other objects and advantages will become more apparent upon reference to the following description taken in connection with the accompanying drawings in which:

Figure 1 is a view looking in at the side of the terminal box mounted on the motor, showing the appearance of the switch of this invention from outside the motor;

Figure 2 is a section indicated by line 2—2 on Figure 1, and showing the construction of the switch proper;

Figure 3 is a sectional view taken on line 3—3 of Figure 2, showing the arrangement of the stationary contact elements of the switch;

Figure 4 is a sectional view indicated by line 4—4 on Figure 3, showing the manner of mounting a terminal post in the switch and its connection through a jumper with a contact member of the switch;

Figure 5 is a fragmentary sectional view indicated on line 5—5 of Figure 2, showing the mounting of the contacts on the movable part of the switch;

Figure 6 is a fragmentary sectional view indicated by line 6—6 on Figure 5, showing a detail in connection with the construction of the movable portion of the switch;

Figure 7 is a diagrammatic view similar to Figure 3, except that it is in a position turned 90° counter-clockwise from Figure 3, and showing the relation of the movable contacts to the fixed contacts in the switch when the switch is adjusted for operation at a voltage of 220 volts, and for rotation in a counter-clockwise direction.

Figure 8 is the wiring diagram for the motor showing the circuit connections that obtain when the switch is adjusted to its Figure 7 position;

Figure 9 is a view like Figure 7, but shows the movable portion of the switch adjusted to the position for operation of the motor at 220 volts in a clockwise direction;

Figure 10 is the circuit diagram corresponding to the switch position illustrated in Figure 9;

Figure 11 is a view like Figures 7 and 9, but

showing the switch adjusted for operation at 110 volts in a clockwise direction;

Figure 12 is the circuit diagram corresponding to the position of the switch in Figure 11;

Figure 13 is a view like Figures 7, 9 and 11, and shows the switch adjusted for operation at 110 volts in a counter-clockwise direction; and,

Figure 14 is the circuit diagram corresponding to the position which the switch occupies in Figure 13.

Referring to the drawings somewhat more in detail, reference may be made to any of Figures 8, 10, 12 and 14 for an understanding of the manner in which the windings of the motor are connected with the terminals of the switch. In these views the running windings of the motor are indicated at 10 and 12, and it will be seen that the opposite ends of winding 10 are connected with terminals 1 and 2, respectively, whereas, the opposite ends of winding 12 are connected with terminals 3 and 4, respectively. The split phase starting winding is represented at 14, and it has one terminal connected with the contact numbered 8, and its other end connected through a centrifugal switch 16 with the contact numbered 5.

The power lines L1 and L2 lead to the contacts numbered 1 and 4, respectively.

Turning now to Figures 1 through 6, the switch, according to the present invention, comprises an insulating back plate or mounting plate 20, and mounted therein are a plurality of peripherally spaced terminal posts 22, which correspond with the contact elements previously referred to, and which bear the numbers 1, 2, 3, 4, 5 and 8. These terminal posts 22 extend out the back of plate 20 and are preferably notched or slotted, as at 24, for connecting thereto the power lines leading into the motor, as well as the wires leading to the windings of the motor.

Spaced from back plate 20 on the front side thereof is another insulating plate 26, and the terminal posts 22 extend through this plate and are riveted over as at 28, whereby to form contact elements.

As will be seen in Figures 3 and 4, a plurality of additional contact elements, as at 30, are provided about the switch, and these contact elements 30 are electrically connected in certain cases with certain ones of the posts 22 by jumpers 32 and 34. Jumpers 32 are relatively short jumpers and serve to connect adjacent ones of elements 30 and 22, whereas jumpers 34 are relatively long and connect certain ones of the posts 22 with the contact elements 30 three spaces displaced therefrom.

The plates 26 and 20 are also held together with the described jumpers therebetwen by the threaded central sleeve 36 which is shouldered beneath plate 20 and which is flared out immediately above plate 26.

The movable portion of the switch comprises the adjusting knob 38 mounted on sleeve 40, which has its lower end flared out, as at 42, so to clamp thereon the insulating disc 44. Riveted to insulating disc 44 at two diagrammatically opposite points thereon, are two three-pronged contact members 46. This arrangement will best be seen in Figure 5, wherein the rivets connecting the three-pronged contact element with disc 44 are indicated at 48.

Disposed beneath adjusting knob 38 and on top of the three-pronged contact members 46 is a relatively thin disc 50, which serves as a shield or guard for effecting at least a partial enclosure of

the fixed and movable contacts of the switch to prevent them from being touched by wires or by anyone working on the motor.

Disc 44 also carries a pin 52 projecting in the axial direction toward plate 20 and of such a length that it will engage one of the apertures 54 in the said plate when the contact members 46 engage the fixed contacts of the switch.

In order to maintain the movable part of the switch in position for contact members 46 to be in good electrical contact with the fixed contact elements, a screw 56 is provided, extending through sleeve 40 and threadedly engaging sleeve 36. This screw, together with indexing or locking pin 52, prevents accidental adjustment of the switch, and at any time it is desired to move the switch to a good position, screw 56 must be loosened, the movable portion pulled outwardly to disengage pin 52 from the aperture 54 in which it is disposed, and then adjusting knob 38 turned to the new position and pushed back into place, at which time pin 52 will engage another of the apertures 54. Screw 56 is then again pulled up tight and the new circuit conditions desired for the motor will obtain.

In order to facilitate the adjustment of the switch to its several positions, adjusting knob 38 preferably has an index mark thereon, as at 60, which will register with the several index marks 62 on the stationary cover 64 of the terminal box in which the switch is mounted.

It is to be noted that the three-pronged contact members 46 are not only so arranged that the several legs thereof are inherently resilient whereby a good contact thereof with the fixed contact elements of the switch is assured at all times, but the said three-pronged contact members are diametrically opposite each other on disc 44 and the switch is thus balanced at all times and in all positions of adjustment.

Turning now to Figures 7 through 14, it will be seen in what manner the three-pronged contact members 46 cooperate with the stationary contact elements of the switch in effecting the several different circuit connections referred to. Inasmuch as all of the circuit connections are well-known, no detailed discussion thereof is here given, but it will be apparent that when the switch is in either of its 220 volt positions, the running windings of the motor are in series between lines L1 and L2, whereas, when the switch is adjusted into either of its 110 volt positions, the said running windings are connected in parallel.

Further, for either of the clockwise direction-of-rotation positions of the switch, the split phase winding 14 is connected in one direction in parallel with winding 12, whereas when the switch is adjusted in either of its counter-clockwise rotation positions, the said auxiliary winding is connected in parallel with winding 12 in the opposite direction.

It is to be observed that the switch of the present invention is characterized by being of comparatively simple construction, whereby it can readily be produced by standard manufacturing procedures, and also, the uniform circumferential arrangement of the fixed contact elements eliminates the need for specially shaped movable contact elements and the like, and likewise, simplifies the problem of making connections to the switch. The provision, by this invention, of the described jumpers 32 and 34 is important in permitting the simplified construction of the switch described by readily providing

connection between certain of the contact elements **30** and certain of the members **22**, which serve not only as contact elements, but also as terminal posts.

It will be understood that this invention is susceptible to modification in order to adapt it to different usages and conditions, and, accordingly, it is desired to comprehend such modifications within this invention as may fall within the scope of the appended claims.

I claim:

1. In a switch of the nature described for effecting voltage change and direction of rotation change in a single phase motor; an insulated stationary panel, a plurality of contact elements embedded in said panel in circumferentially spaced relation around the peripheral edge thereof, certain of said elements projecting out one side of said panel and serving as terminal posts for connection with the leads of the motor and with the power lines that supply energy to the motor, a rotary member on the other side of said panel, said rotary member having peripherally located contact members for contacting said contact elements, means rotatably supporting said member on said panel, and means for locating said rotary member on said panel and for locking it in position thereon in the several operative positions of the said member, said means comprising a pin inwardly of said contact members carried by one of said rotary member and panel and extending axially toward the other thereof and a series of apertures in the other of said rotary member and panel for receiving said pin, said pin being of such a length that the contact members are separated from the contact elements before the pin is disengaged from the aperture in which it is positioned, and means for releasably clamping said rotary member to said panel with said pin in one of said apertures and with said contact members on the rotary member in pressure engagement with the aligned ones of said contact elements on said panel.

2. In a switch of the nature described for effecting voltage change and direction of rotation change in a single phase motor; a stationary panel, a plurality of contact elements rigidly embedded in said panel in circumferentially spaced relation around the peripheral edge thereof, certain of said elements projecting out one side of said panel and serving as terminal posts for connection with the leads of the motor and with the power lines that supply energy to the motor, a rotary member on the other side of said panel, said rotary member having contact members around its periphery for contacting said contact elements, means rotatably supporting said member on said panel, and means for locating said rotary member on said panel and for locking it in position thereon in the several operative positions of the said member, said means comprising a pin positioned inwardly of said contact members on said rotary member and a series of apertures on said panel for receiving said pin, said pin being of such a length that the contact members are separated from the contact elements before the pin is disengaged from the aperture in which it is positioned, the said means rotatably supporting the rotary member on said panel comprising a screw and said screw being adapted for clamping the rotary member against the panel to prevent its accidental movement.

3. In a voltage change and reversing switch for a single phase electric motor; an insulated stationary panel, a plurality of contact elements rigidly embedded in said panel around the peripheral edge thereof and in circumferentially spaced relation, certain of said elements projecting beyond one side of the panel and comprising terminal posts having notches therein for receiving the leads of the motor and the power lines that supply energy to the motor, jumpers extending between and electrically interconnecting certain ones of the said contact elements rigidly secured to the other side of said panel, a rotary member on the said other side of said panel, contact members carried by the rotary member on the periphery thereof for engagement with said contact elements, a pin carried by the rotary member inwardly of said contact members, a series of apertures in the panel and positioned inwardly of said contact elements for receiving the pin in the operative positions of the rotary member, said pin being of such a length that the contact members are separated from the contact elements before the pin is withdrawn from the aperture in which it is located, a threaded bushing mounted in the panel, and a screw extending through said rotary member and providing a pivot axis therefor, said screw engaging said threaded bushing whereby the rotary member can be positively locked in any one of its operative positions and cannot accidentally be moved at any time.

4. In a switch of the nature referred to; a stationary panel of insulating material, a plurality of contact elements embedded in said panel and located only around the peripheral edge thereof, certain of said elements projecting beyond the panel at one side to provide terminal posts for receiving the leads of the motor and the power lines that supply energy to the motor, jumpers on the other side of the plate extending between and electrically interconnecting certain ones of said contact elements, an insulating plate secured to said contact elements and confining the said jumpers between it and the said panel, a rotary member on the said other side of the panel and contact members carried on the peripheral edge thereof for engagement with said contact elements, a pin carried by said rotary member radially inwardly of said contact members, a series of apertures in said plate for receiving the pin and said pin being of such a length that the contact members are separated from the contact elements before the pin is separated from the aperture in which it is located, a central bushing in said rotary member clamping the contact members thereto, a screw extending through said central bushing, and a threaded bushing in said panel receiving the end of said screw whereby the rotary member is positively held in position relative to said panel with respect to both axial movement and circumferential movement.

5. In a switch; a stationary panel of insulating material and contact elements mounted therein in circumferentially spaced relation, jumpers on one side of the panel electrically connecting certain pairs of said elements, an insulating plate covering the jumpers but exposing the contact elements, a rotary knob, a hollow sleeve in the knob projecting toward the panel, a first insulating disc on the sleeve projecting radially outwardly from the knob, a second and smaller insulating disc on the sleeve, contact members clamped between the discs including resilient fingers to engage said contact elements, means clamping the discs to the sleeve for rotation by

the knob, a central bushing mounted in the said plate and panel, a screw through said sleeve engaging said bushing for clamping the knob in position to hold the contact member thereon in pressure engagement with the said contact elements, and means providing for positive location of the knob in its several angular positions of adjustment relative to the panel.

6. In a switch, a stationary panel of insulating material and contact elements mounted therein in circumferentially spaced relation, jumpers on one side of the panel electrically connecting certain pairs of said elements, an insulating plate covering the jumpers but exposing the contact elements, a rotary knob, contact members carried by the knob and including resilient fingers for engagement with said contact elements, means for engaging of the elements by the fingers in only selected angular positions of the knob, and means for clamping the knob to the panel in the said positions.

7. In a switch; a stationary panel of insulating material and contact elements mounted therein in circumferentially spaced relation, jumpers on one side of the panel electrically connecting certain pairs of said elements, an insulating plate covering the jumpers but exposing the

contact elements, a rotary knob, contact members carried by the knob and including resilient fingers for engagement with said contact elements, means permitting engagement of the elements by the fingers in only selected angular positions of the knob, and means for clamping the knob to the panel in the said positions, said knob including a disc of insulating material between it and said contact members extending radially outwardly from the knob to beyond the ends of said fingers.

STEFFEN S. BROWN.

References Cited in the file of this patent

UNITED STATES PATENTS

Number	Name	Date
844,630	Temple	Feb. 19, 1907
1,306,770	Pieper et al.	June 17, 1919
1,559,683	Douglas	Nov. 3, 1925
2,256,181	Tyrner	Sept. 16, 1941
2,426,306	Houck et al.	Aug. 26, 1947

FOREIGN PATENTS

Number	Country	Date
457,566	Great Britain	Dec. 1, 1936