H. S. FOLGER & T. ROSS.

SELF INKING HAND STAMP.

APPLICATION FILED JAN. 8, 1915.

1,230,391. **Patented June 19, 1917.**

Fig. 1.

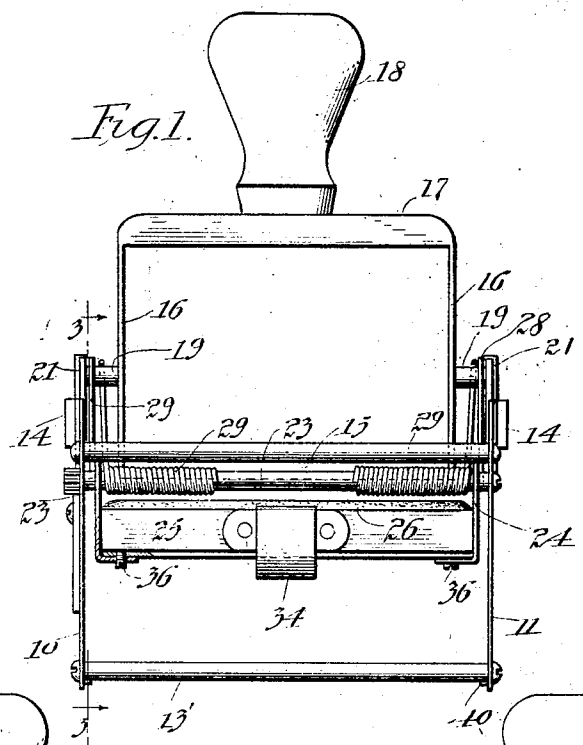

Fig. 2.

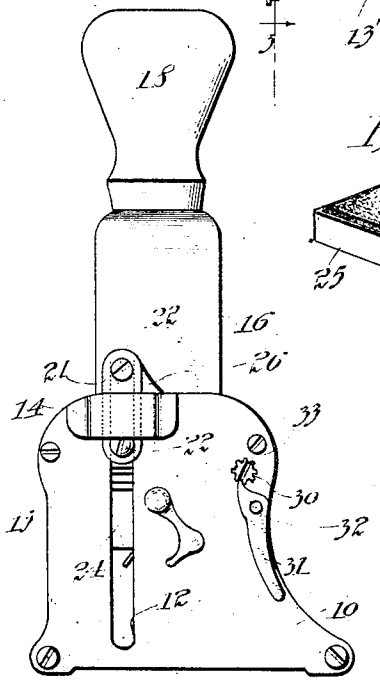

Fig. 4.

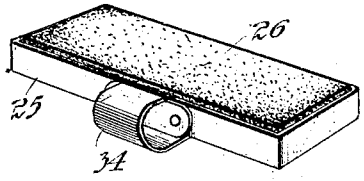

Fig. 3.

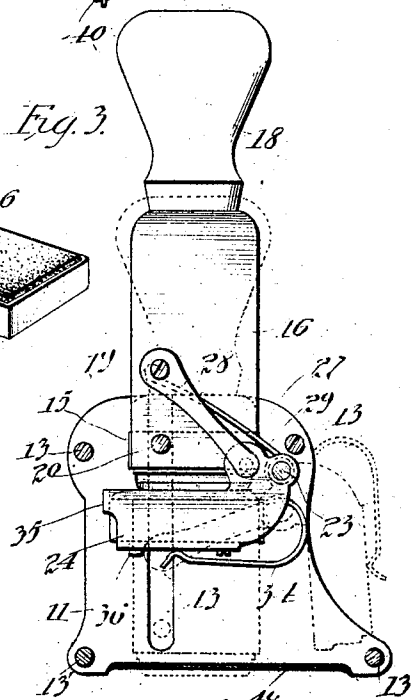

Witnesses:

Arthur H. Cashow

Robert H. Weir

Inventors:

Harry S. Folger

Tony Ross

by Casper L. Redfield Atty.

UNITED STATES PATENT OFFICE.

HARRY S. FOLGER AND TOREY ROSS, OF CHICAGO, ILLINOIS.

SELF-INKING HAND-STAMP.

1,230,391. Specification of Letters Patent. Patented June 19, 1917.

Application filed January 6, 1915. Serial No. 1,071.

To all whom it may concern:

Be it known that we, HARRY S. FOLGER and TOREY ROSS, citizens of the United States of America, and residents of Chicago, county of Cook, and State of Illinois, have invented certain new and useful Improvements in Self-Inking Hand-Stamps, of which the following is a specification.

Our invention relates to self inking hand stamps and has for its object improvements in such devices.

In the accompanying drawings

Figure 1 is a rear elevation;

Fig. 2 is a side elevation;

Fig. 3 is a section on line 3—3 of Fig. 1; and

Fig. 4 is a perspective of the pad box and pad.

The side plates 10 and 11 are similar flat plates connected together by tie bolts 13¹. The plates 10 and 11 are provided with guiding slots 12 which nearly cut the plates in two. Bridges 14 connect the upper parts of the plates around the upper ends of the slots so as to strengthen the plates and at the same time not interfere with the action of the slots as guides.

The lower edges of the plates 10 and 11 have their central portions bent inward to form flanges as shown at 40, thus leaving feet on which the stamp frame stands. The flanges 40 act as stiffness for the plates 10 and 11 across the space cut out by the slots 12.

The stamp body 15 is supported between the arms 16 secured to or integral with the bridge 17. The parts 16 and 17 may be considered as a bail supporting the stamp body 15 and the handle 18.

Secured to the arms 16 are studs 19 and 20 which support guide blocks or slides 21 arranged to reciprocate in the slots 12. Screws 22 serve as a convenient means for securing the blocks 21 to said studs.

On a shaft 23 supported in plates 10 and 11 is pivoted a pad supporting flange or pad carrier 24 in which is carried a pad box 25 having a pad 26 adapted to engage the type face of the stamp body 15 when said body is at its upper position in the frame 10—11. Links 28 between studs 19 and pins 27 on pad frame 24 serve to move said frame on its pivot in conjunction with the reciprocation of the stamp in the stamp frame 10—11. The arrangement is such that when the stamp rises in its frame the pad 26 will be drawn into contact with the stamp face, and will be moved from the stamp face and to the rear when the stamp descends to print. The lower position of the stamp is shown in dotted lines in Fig. 3.

On the shaft 23 are springs 29 having their inner ends secured to the shaft and their outer ends engaging pins 19 to elevate the stamp in the stamp frame. On one end of the shaft 23 is a toothed wheel or pinion 30 having its teeth engaged by a lever 31 pivoted at 32 on the plate 10. A screw driver slot 33 in the pinion 30 serves to adjust the position of shaft 23 so as to vary the tension of springs 29. The lever 31 holds whatever adjustment is made.

Secured to the side of the box 25 is a leaf spring 34, the free end of which extends under the box and is shaped as shown in Fig. 3. As so made the box 25 may be freely inserted in and withdrawn from its position in the swinging frame 24. When in position, the spring 34 clamps the horizontal member of the swinging frame 24 to the bottom of the box 25. The swinging frame 24 has, on its front, lips or stops 35 (Fig. 3) which limit the forward movement of the box 25 when it is inserted in position. Also, these stops 35 serve to prevent the box 25 from sliding forward under centrifugal force when the frame 24 is moved rapidly on its pivot 23. As a consequence of inserting the pad box from the rear to a stop in front, the spring 34 may be relatively light as there is no displacement strain to be resisted by the spring in normal operation.

In the frame 24 underneath the corners of the box 25 are small screws 36 having round points. The box 25 is presumed to rest squarely upon the base of the frame 24 with the face of the pad evenly in contact with the printing face of the stamp. Under such conditions the screws 36 perform no function. Should, however, the pad be uneven and not properly engage some corner of the stamp face, then the screw 36 under that corner may be adjusted to raise the pad to a level. The rounded end of the screw which is thus adjusted to project above the surface of the frame 24 avoids any catching of the box on the screw when the box is inserted in position after having been withdrawn.

What we claim is:—

A frame providing guides, a stamp having slides adapted to reciprocate in the

guides and a handle by which it is moved, a pad pivotally supported upon the frame, connections between the stamp and the pad to cause them to move simultaneously, a spring serving to elevate the stamp in its frame, a shaft serving as a support for the spring and a pivot for the pad, means by which the shaft may be turned to adjust the tension of the spring, and a locking device secured to the frame and serving to hold the shaft at a desired adjustment.

Signed at Chicago, Ill., this 6th day of January, 1915.

HARRY S. FOLGER.
TOREY ROSS.

Witnesses:
WALTER H. REDFIELD,
C. L. REDFIELD.