Aug. 7, 1951 P. L. BARENSFIELD ET AL 2,562,999

SHEET FEEDER FOR COLLATOR

Filed Feb. 25, 1949 4 Sheets-Sheet 1

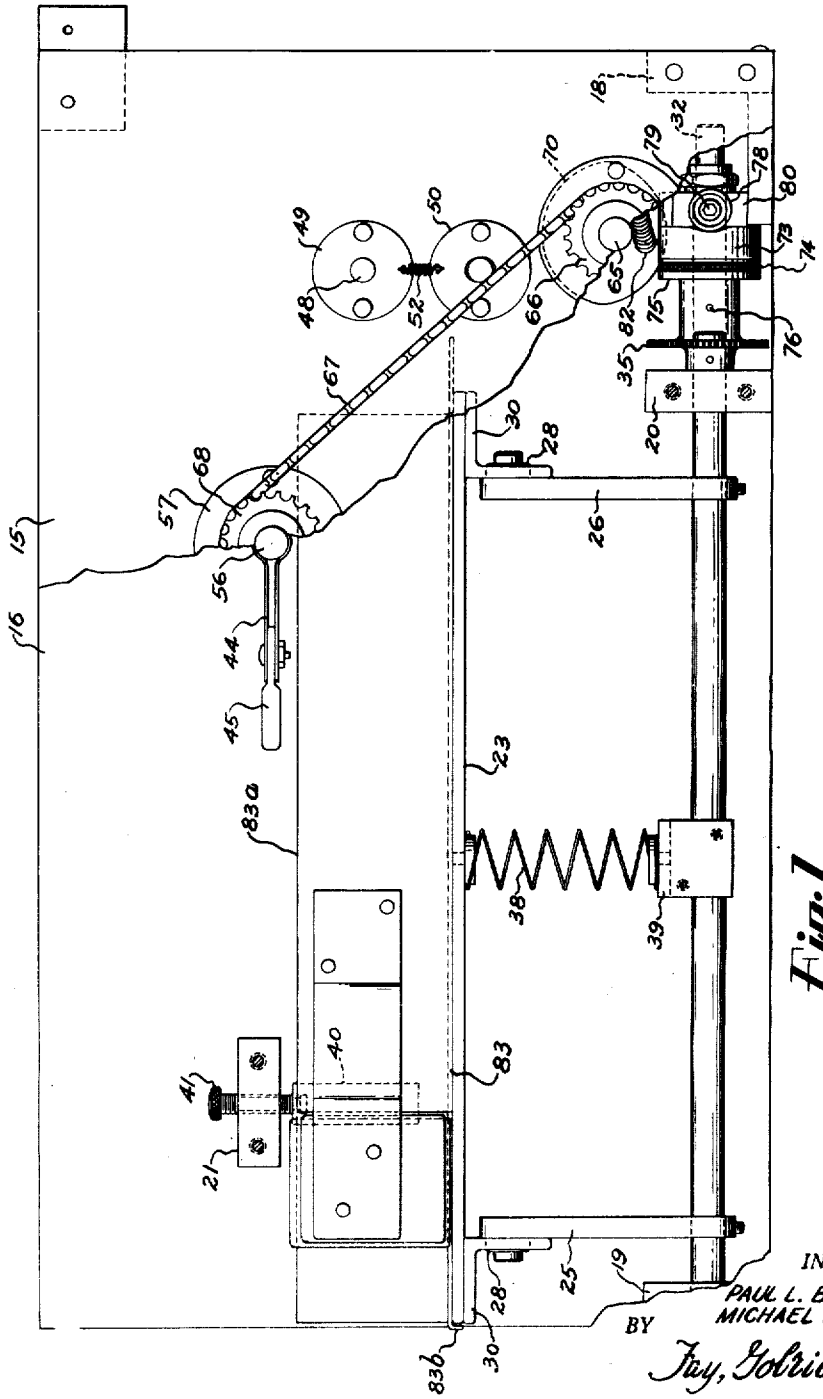

Fig. 1

INVENTORS,
PAUL L. BARENSFIELD
MICHAEL A. NADER

BY Jay, Golrick & Jay

ATTORNEYS

Aug. 7, 1951 P. L. BARENSFIELD ET AL 2,562,999

SHEET FEEDER FOR COLLATOR

Filed Feb. 25, 1949 4 Sheets-Sheet 2

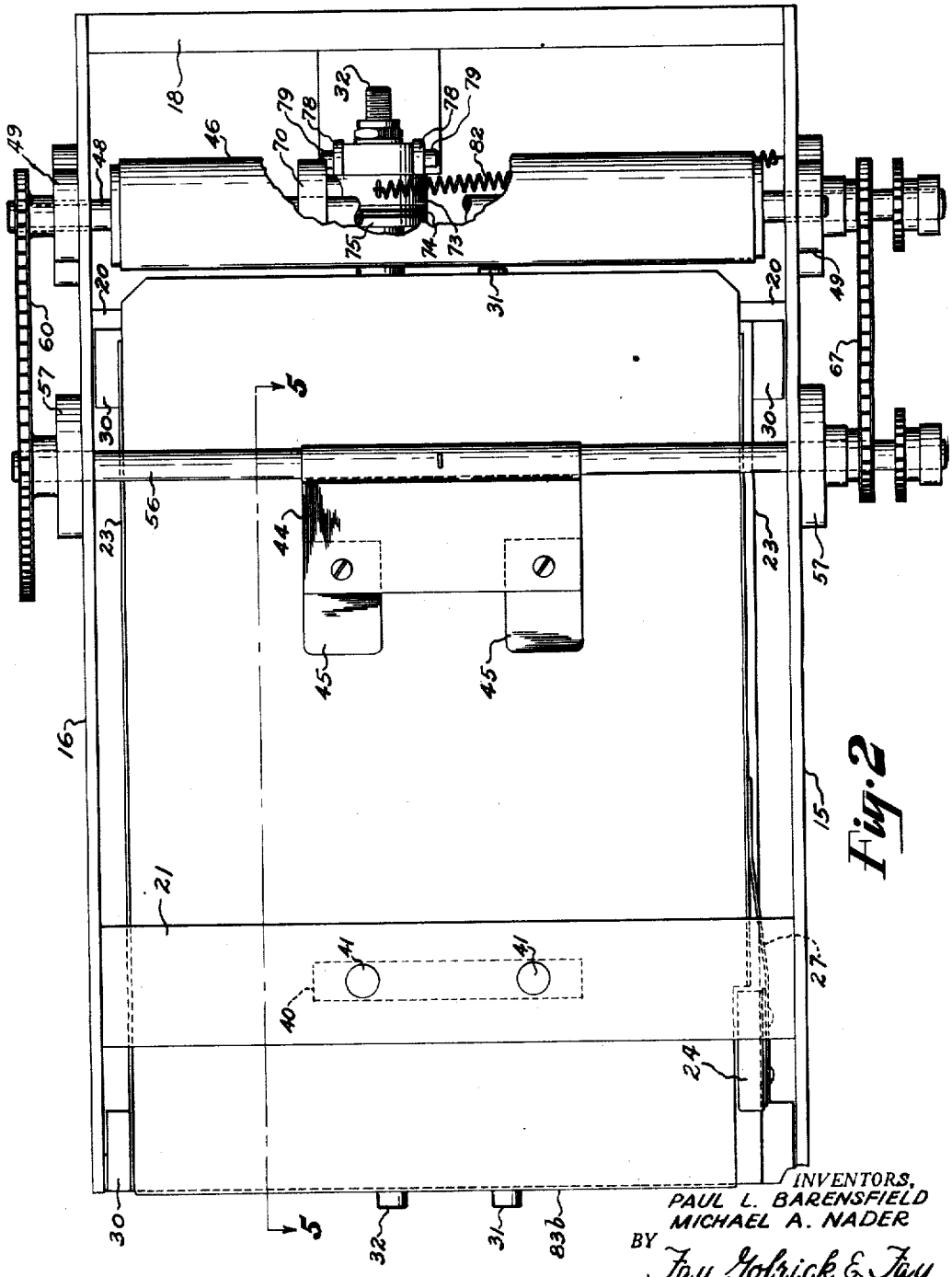

Fig. 2

INVENTORS,
PAUL L. BARENSFIELD
MICHAEL A. NADER
BY Fay, Gobrick & Fay
ATTORNEYS

Aug. 7, 1951 P. L. BARENSFIELD ET AL 2,562,999

SHEET FEEDER FOR COLLATOR

Filed Feb. 25, 1949 4 Sheets-Sheet 3

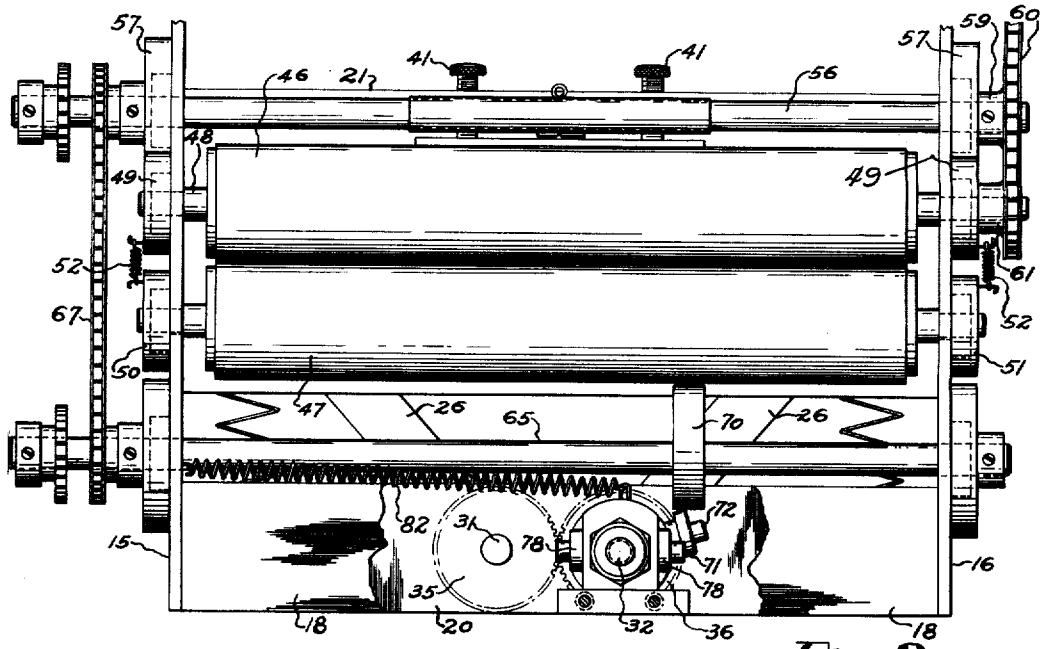

Fig. 3

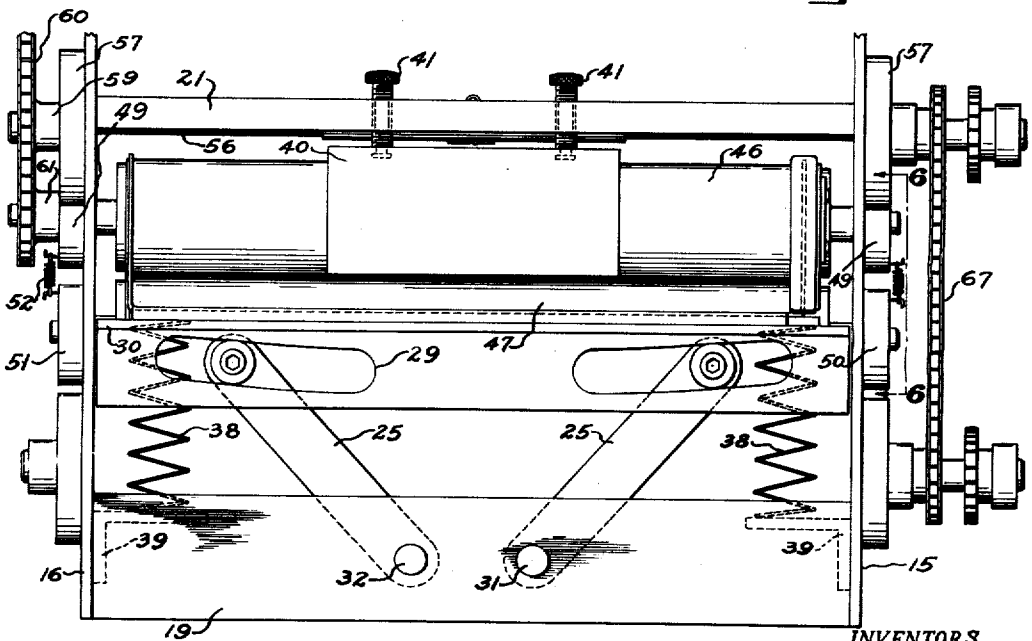

Fig. 4

INVENTORS,
PAUL L. BARENSFIELD
MICHAEL A. NADER
BY
Fay, Gobrick & Fay
ATTORNEYS

Aug. 7, 1951 P. L. BARENSFIELD ET AL 2,562,999

SHEET FEEDER FOR COLLATOR

Filed Feb. 25, 1949 4 Sheets-Sheet 4

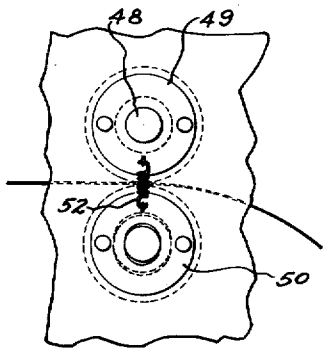

Fig. 6

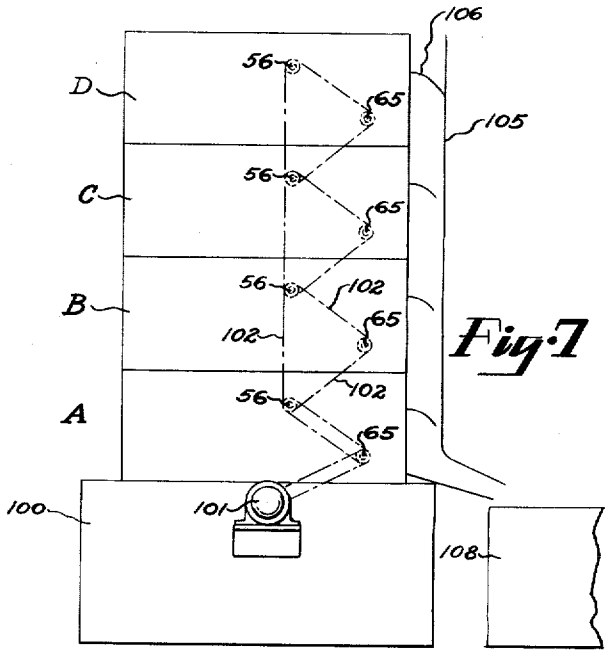

Fig. 7

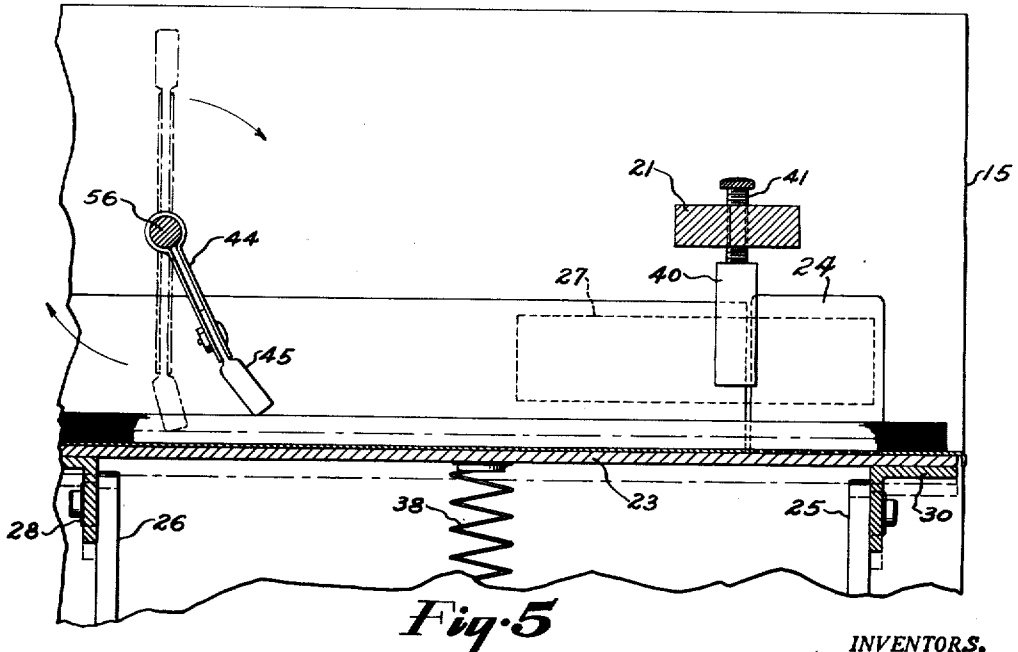

Fig. 5

INVENTORS,
PAUL L. BARENSFIELD
MICHAEL A. NADER
BY Fay, Gobrick & Fay
ATTORNEYS

Patented Aug. 7, 1951

2,562,999

UNITED STATES PATENT OFFICE

2,562,999

SHEET FEEDER FOR COLLATOR

Paul L. Barensfield, Parma, and Michael A. Nader, North Olmstead, Ohio

Application February 25, 1949, Serial No. 78,374

4 Claims. (Cl. 271—39)

1

The general object of the present invention is the provision of a collating mechanism wherein stacks of loose sheet paper can be fed to printing machines, folding machines, book assemblers, addressing machines, etc. with certainty and uniformity.

A further object of the invention is the provision of a sheet feeding mechanism wherein the top sheet of a stack to be fed can be moved directly from the top of the stack and be fed directly to another mechanism without necessitating the utilization of suction grippers and kindred sheet grippers.

A still further object of our invention is the provision of a sheet feeding mechanism of such mechanical arrangement that a plurality of the mechanisms can be associated to be driven from a common actuating means and effect the collation of a plurality of sheets of material, such as printed paper sheets to be assembled in proper order.

Other objects and advantages of the invention will be apparent from the following detailed description of preferred forms of embodiment of the invention, reference being made to the accompanying drawings wherein—

In the drawings, Fig. 1 shows a side elevation of a sheet feeding unit incorporating the features of our invention;

Fig. 2 is a plan view of the unit shown in Figure 1;

Fig. 3 is an end elevation of the feeding end of the unit;

Fig. 4 is an elevational view of the opposite end of the unit;

Fig. 5 is a cross-sectional view taken substantially along the line 5—5 of Figure 2;

Fig. 6 is a fragmentary view of the ends of the sheet feeding rolls and illustrating the floating bearing mounting of one of the rolls; and

Fig. 7 is an elevational view of an arrangement of four of the units disposed to operate upon four stacks of sheet material for collating purposes.

Our invention contemplates the use of the top of a stack of sheet material to be fed to another station or machine, sheet by sheet, for gauging purposes whereby the top sheet of the stack will always be disposed in substantially the same plane relative to a rotary upper sheet feeding means regardless of the decrease in the quantity or size of the stack. The action is such that the bottom plane of the stack changes constantly and in accord with the progressively decreasing height of the stack. The top of the stack is urged against an adjustably fixed stop or block during each cycle of operation of the mechanism with substantially constant upward thrust or pressure and we prefer to obtain this upward thrust against the stop by a resilient means in the form of springs acting on the stack tray or carrier.

2

The tray with the stack is depressed a uniform distance relative to the stop during the feeding action of a rotary feed mixer. A positively acting means effecting a uniform depression of the tray and stack acts on compensating cams on the tray whereby as the stack is lessened in height the top plane of the stack will always be disposed in the same plane relative to the rotary path of the sheet wiper feeding means at the time the sheet feeding action takes place. A snubbing action is exerted on the stack side by a yieldable means as the top sheet is moved from the stack.

Referring to the drawings, our invention is illustrated as being incorporated in a suitable frame structure comprising side plates or panels 15 and 16 connected primarily by an end member 18 at the feed end of the device, cross-member 19 at the rear end of the device and intermediate cross-member 20. All three of these cross-members are located near the bottom of the frame structure. The upper parts of the side members 15, 16 are connected by a bridge member 21 which comprises a support for an adjustable stop means, the function of which will be described later.

The platform for supporting the work or trays of sheets to be handled by the machine comprises a vertically movable platform member 23 which is supported or stabilized by pairs of rocking lever links 25 located at the rear end thereof and a like pair of links 26 at the forward end thereof and supported on rocker shafts. The upper ends of the links are provided with rollers 28 operating in cam slots 29 formed in the depending flanges of angle irons 30 secured to the under side of the platform, the particular camming characteristics of which will be discussed later in greater detail. The lower ends of the links 25 and 26 are secured to parallel rocker shaft members 31 and 32 having on the forward ends thereof gear members 35 and 36 respectively. The gear members have the same number of gear teeth. The shaft members 31 and 32 are actuated through rocking motions in a manner to be described, but when not being positively rocked are free to respond to the action of spring members 38 abutting the under sides of the support 23 at the sides thereof. The spring members 38

rest on brackets 39 secured to the side members 15, 16 and tend to maintain the platform 23 in a normally upward position. Thus, the loaded tray and the platform and the pairs of links 25 and 26 and the rocker shafts are all moved in one direction of operation by reason of the spring members 38, the latter being of predetermined strength.

The stop against which the top surface of the stacked sheet abuts by reason of the action of the springs 38 comprises a vertically adjustable block 40, suspended on adjusting screws 41 in threaded engagement with the frame or bridge member 21.

We provide means for positively rocking the shafts whereby the pairs of rocker links 25, 26 are swung through a predetermined arc to lower the platform 23 positively against the influence of the supporting spring members 38. This means, including an intermittently acting clutch, to be described, is coordinated with the rotative movement of a feed wiper arm 44 carrying on the free end thereof resilient wiper members 45. These upper members engage the top sheet of the stack in an arcuate wiping action to wipe the top sheet from the top of the stack forwardly to a pair of feed rolls 46 and 47. The upper feed roll 46, preferably is formed of rubber, and the companion lower roll 47 may also have a like formation. The upper roll 46 has the shaft 48 thereof supported in suitable bearings 49, secured to the outside faces of the frame members 15, 16 respectively. The lower feed roll 47 is supported by shiftable bearing members 50, 51 suitably retained on the side members 15, 16 and urged upwardly to bring the lower roll 47 into intimate contact with the roll 46 by spring members 52. The wiper feed arm 44 is mounted on a top shaft 56 which is supported by bearing members 57 situated on the outside of the frame members 15, 16. The shaft 56 has a sprocket member 59 mounted on an outer end thereof to drive a chain 60 which passes over a sprocket 61 mounted upon the shaft 48 of the top feed roll 46. Motor or manual power may be applied to either of the shafts 48 or 56 but we prefer to apply the driving force to another shaft 65, the function of which will now be described.

The rocking movement of the pairs of link arms 25 and 26 and the supporting shafts thereof is positively effected by a clutch and cam mechanism driven by the shaft 65. The shaft 65 preferably is the power shaft and has a sprocket 66 fixed thereon driving a chain 67 which extends over a driven sprocket 68 mounted on the wiper shaft 56. The shaft 65 has a cam 70 fixed thereon, the cam acting on a roller 71 carried by a rocker arm 72 projecting radially upwardly from a hub structure 73 which is freely mounted on the forward end of the rocker shaft 32. This free hub structure 73 comprises part of a friction clutch including fiber disks 74 and a friction clutch member 75, which may comprise part of one of the rocker shaft gears 36. The member 36—75 is fixed to shaft 32 by a pin 76 or by other suitable means. When the hub structure 73 is axially shifted the clutch is opened and closed and this closing and opening of the clutch arrangement is effected by a pair of roller members 78 mounted on fixed studs 79 which are supported by a bearing block 80. The rollers 79 act against the outer end face of the member 73, the latter having cam formations whereby a slight rocking movement of the member 73 by rocker arm 72 forces the member 73 from the right toward the left as viewed in Fig. 1 to thus cause the fiber disk members to be pinched against the flanged formation 75. The width of the face of the cam 70 is such as to permit this axial shifting of the rocker arm and its roller 71, and the roller 71 of the rocker arm 72 is maintained in contact with the face of the cam 70 by a spring member 82 suitably attached at a radial point to the clutch hub 73. The opposite end of the spring member 82 is connected to the side frame member 15.

As shown in Figs. 1 and 2, the platform 23 may support any desirable form of tray carrying the work. We have shown a sheet metal tray 83 having side walls 83*a* and open at both ends. The tray is provided with a downwardly extending flange 83*b* at the rear end thereof for maintaining the tray in position. The side walls of the tray may be adjustable relative to the width of the stack, as will be obvious. Mounted upon one of the tray side walls is a snubber pad 24 (see Fig. 2) carried by a flat spring member 27 secured to a side wall of the tray. The pad may be rubber or other suitable material which, when yieldingly urged against the side edge of the sheets in the stack, will exert some restraining influence upon the sheets in the stack so the top sheet is extracted therefrom by the wiping action of the member 45.

The operation of the mechanism described is as follows. A stack of sheets in the tray 83 are positioned on the platform 23, the platform 23 being forced down against the influence of the springs 38 a sufficient amount to get the stack of sheets beneath the stop block 40. By proper adjustment of the screw members 41 the location of the top plane of the stack relative to the shaft 56 and its rotating sheet feed wiper arm 44 and sheet feed wiper members 45 can then be determined for each class of sheet material to be handled. The shape of the cam 70, which effects the rocking of the pairs of link members 25 and 26 is such that the rollers of the link members will be positively rocked outwardly and downwardly to positively draw down the platform stucture 23. The distance of this downward recession is determined to have a definite relation to the arc of sweep of the wiper members 45 as the shaft 56 is rotated in direction as indicated by the arrows in Fig. 5. The top sheet is wiped from the top of the stack and this arc of contact is sufficient to cause the forward edge of the sheet to be advanced into engagement with the two feed rolls 46, 47 which thereafter completely eject the sheet.

As the wiper members 45 swing forwardly and upwardly out of the way, the depressed part of the cam 70 reaches the roller 71, thus permitting the member 73 to be swung counter-clockwise about the shaft 32 as viewed in Fig. 3, by the action of the spring 82. The cam depressions of the hub member are thus presented to the rollers 78 and the hub member 73 abuts on the bearing block 80, thus preventing further turning movement by reason of the spring 82. The springs 38 cause the platform and stack thereon to be moved vertically upwardly until the top sheet of the stack is brought against the stop block 40.

It should be noted that the shape of the slots 29 is somewhat irregular and these slots, the faces of which are cams, are non-coincident in curvature with any arcs struck from the axes or the centers of the shafts 31 and 32, see Fig. 4. Since the rocking movement of the link arms 25

is in the nature of a part of a crank motion, proper cam surfaces can be developed, regardless of the varying positions of the link arms occasioned by the variation in the height of the stack, the platform and the tray and the stack therein can always be retracted downwardly substantially the same distance so that the effect of wiping arc of the sheet wiper members **45** will always be substantially the same for any given work set up. Furthermore, it has been found that the wiping or feeding action of the members **45** can be taking place while there is still some downward motion of the platform taking place.

In Fig. 7 we have illustrated more or less diagrammatically the pyramiding of four of the sheet feeder units hereinbefore described and which can be coordinated whereby the rotation of the wiper arms **44** of each unit can be adjusted relative to the rotative points of the arms of the other feed units. Thus, collating of the sheet material may be effected quite readily. This modification, it will be understood, would have suitable means on the frames of the units so that units A, B, C, D, etc. can be operatively superposed as shown in Fig. 7 of the drawings and arranged on a pedestal or base **100**. A chain drive extends to the cam shaft **65** of the first unit A from a motor **101**. A chain drive **102** is then arranged between the feed wiper shaft **56** of the first unit, the cam shaft **65** of the second unit B and then to the upper shaft **56** of the second unit B, etc., in the form of a trianguular chain drive. A chute structure **104** at the feeding front of the units is provided with sheet guiding vanes **106** for directing the sheets downwardly in proper order to a tray **108**. The order of selection of the sheets can be obtained by adjusting the sprockets of the drives of the respective units.

Speed and dependability are the essence of the merit of the general class of mechanisms to which our improvements are directed. We obtain both of these characteristics regardless of paper texture, thickness and surface finish.

We claim:

1. A sheet handling apparatus comprising, a frame; a sheet supporting platform mounted on the frame and adapted to support a stack of sheets, an element for engaging the topmost sheet of the stack on the platform and for moving the sheet laterally, said element comprising a rotary arm having a resilient sheet engaging end for removing successive sheets by a rotary wiping action; a stop means in the frame engageable by the uppermost sheet of the sheets carried by said platform; mechanism intermittently effective in synchronic relation to said rotary element for resiliently urging said platform upwardly to cause the topmost sheet to engage with said stop means whereby said stop means positions the elevation of the platform during that part of the cycle that said element is out of engagement with a sheet and positively driven means for lowering said platform from said elevation and for maintaining the platform lowered during the part of the cycle that said element engages and slides the uppermost sheet, said last named means comprising positively operated parallel shafts with link arms thereon connected to the platform and a clutch and gear mechanism for rocking the shafts and arms.

2. A sheet handling apparatus comprising, a frame; a sheet supporting platform mounted on the frame; a rotary arm with a free resilient end for engaging the topmost sheet on the platform

and moving the sheet laterally, said rotary arm being operable cyclically for removing successive sheets in a continuous operation; a stop block supported on the frame and engageable by the uppermost sheet of a stack of sheets carried by said platform; and spring members for resiliently urging the platform and the stack upwardly for engaging the topmost sheet with said stop block whereby said stop block positions the elevation of the platform during that part of the cycle that said rotary arm is out of engagement with a sheet, a positively driven means for lowering said platform from said stop block comprising a rotary cam synchronized with the rotary arm, a pair of gear-connected shafts, means operated by the cam for rocking the shafts including an intermittently operated clutch mechanism drivingly connecting a rocker arm mechanism operated by the cam to one of the shafts, and rocker linkage means connecting the shafts to the platform.

3. A sheet handling apparatus comprising a frame; a sheet-supporting platform mounted on the frame; a rotary arm element for engaging the topmost sheet of a stack on the platform and for moving the sheet laterally, said element being operable for removing successive sheets during continued rotary motion thereof; feed rolls adapted to receive and guide sheets displaced from the stack by said element; a stop means engageable by the uppermost sheet of a stack of sheets carried by said platform; means for resiliently urging said platform upwardly for causing engagement of the topmost sheet with said stop means whereby said stop means limits the elevation of the stack; and an intermittently driven means for lowering said platform against the action of said resilient means from said elevation and maintaining the platform displacement substantially in synchronism with the vertical displacement of the sheet-engaging portion of said rotary arm element during a part of the rotation that said element engages and slides the uppermost sheet to the feed rolls, said driven means comprising positively operated parallel shafts with link arms thereon connected to the platform and a clutch and gear mechanism for rocking the shafts and arms.

4. A sheet handling apparatus comprising a frame; a sheet-supporting platform mounted on the frame; a rotary arm element for engaging the topmost sheet of a stack on the platform and for moving the sheet laterally, said element being operable for removing successive sheets during continued rotary motion thereof; feed rolls adapted to receive and guide sheets displaced from the stack by said element; a stop means engageable by the uppermost sheets of a stack of sheets carried by said platform; means for resiliently urging said platform upwardly for causing engagement of the topmost sheet with said stop means whereby said stop means limits the elevation of the stack; an intermittent driving means for lowering said platform against the action of said resilient means from said elevation and maintaining the platform displacement substantially in synchronism with the vertical displacement of the sheet-engaging portion of said rotary arm element during the part of the rotation that said element engages and slides the uppermost sheet to the feed rolls, said driving means comprising a rotary cam synchronized with the rotary arm, a pair of gear-connected shafts, means operated by the cam for rocking the shafts including an intermittently operated

clutch mechanism drivingly connecting a rocker arm mechanism operated by the cam to one of the shafts, and rocker linkage means connecting the shafts to the platform.

PAUL L. BARENSFIELD.
MICHAEL A. NADER.

REFERENCES CITED

The following references are of record in the file of this patent:

UNITED STATES PATENTS

Number	Name	Date
1,240,462	McCormack	Sept. 18, 1917
1,551,772	Phelps	Sept. 1, 1925
1,563,417	Wright	Dec. 1, 1925
1,850,108	Hunter	Mar. 22, 1932
1,865,750	Elwell	July 5, 1932
2,112,341	Klemm	Mar. 29, 1938
2,308,804	Dager	Jan. 19, 1943
2,373,746	Dager	Apr. 17, 1945