United States Patent [19]

Sauer et al.

[11] **3,734,087**

[45] **May 22, 1973**

[54] **EXTERNAL PRESSURE CIRCULATORY ASSIST**

[75] Inventors: **Harold S. Sauer,** Carlisle; **Nubar D. Hagopian,** Bedford; **John M. Colman,** Lexington, all of Mass.

[73] Assignee: **Medical Innovations, Inc.,** Waltham, Mass.

[22] Filed: **Nov. 11, 1971**

[21] Appl. No.: **197,824**

[52] **U.S. Cl.** **128/64**

[51] **Int. Cl.** **A61h 7/00**

[58] **Field of Search** 128/24, 30.2, 64

[56] **References Cited**

UNITED STATES PATENTS

3,303,841	2/1967	Dennis	128/24 R
3,654,919	4/1972	Birtwell	128/64
3,403,673	10/1968	MacLeod	128/64 UX
3,659,593	5/1972	Vail	128/64

Primary Examiner—Lawrence W. Trapp

Attorney—Robert A. Cesari, John F. McKenna and Martin J. O'Donnell et al.

[57] **ABSTRACT**

Improved external pressure circulatory assist device of the type which utilizes an electrocardiogram signal to facilitate synchronization of its pressure pulse with the heartbeat. The improvements include a more efficient and clinically suitable mechanical means to induce pressure variations in the legs of a patient, and an automatic control means to maintain the proper pressurization even during physiological changes in the limbs of the patient being treated, and control means to monitor and adjust the pressure wave to achieve the proper phasing of the pressure wave with the cardiac cycle during treatment of the patient.

43 Claims, 7 Drawing Figures

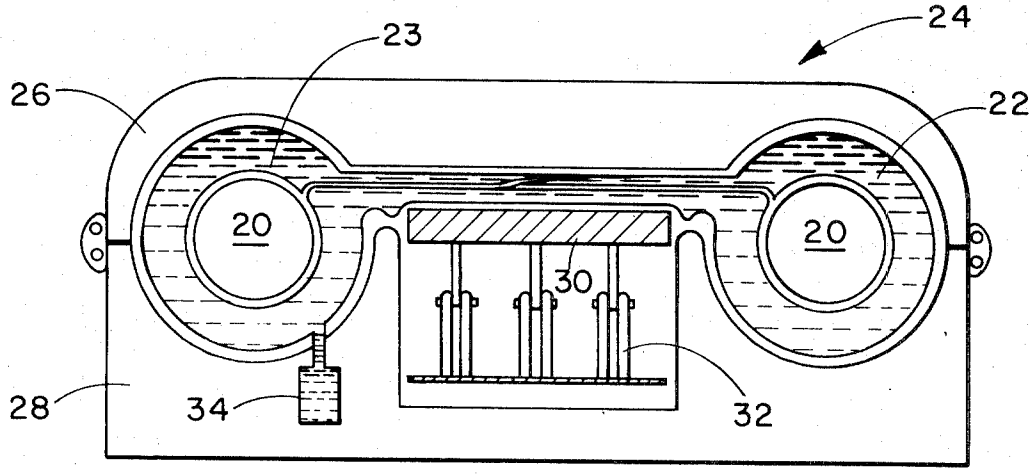

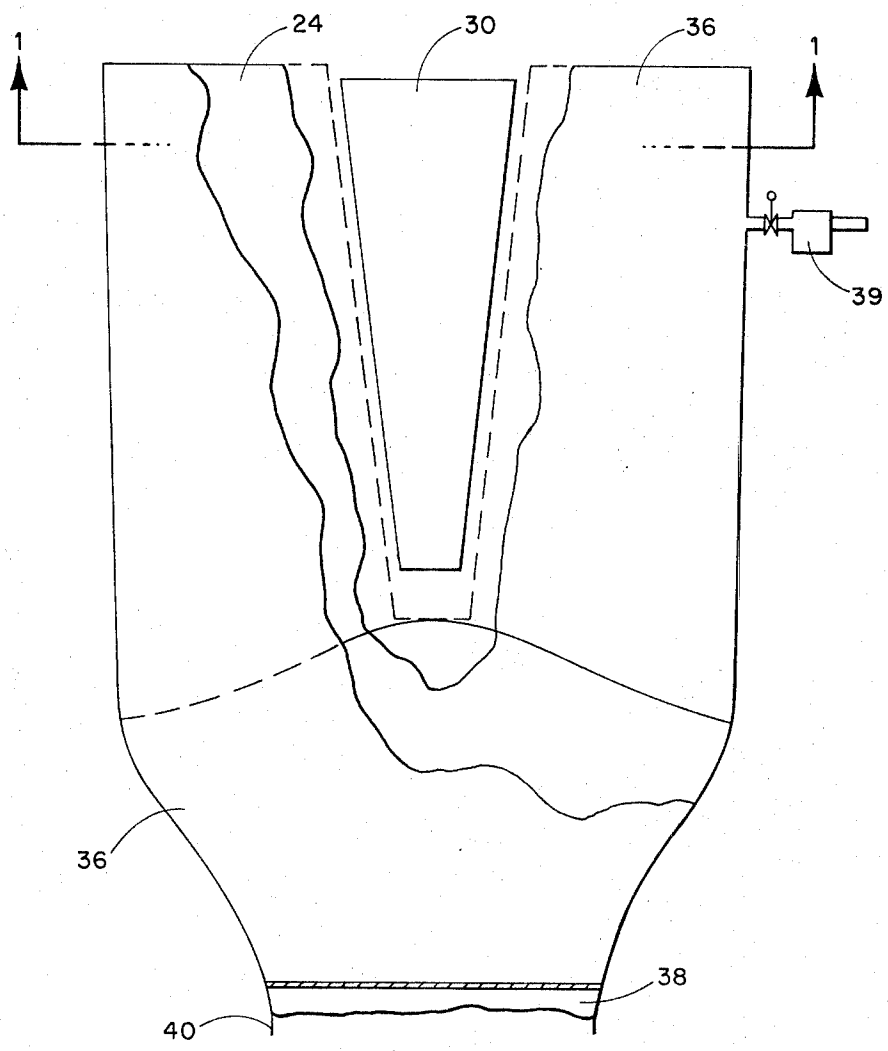

Fig. 2.

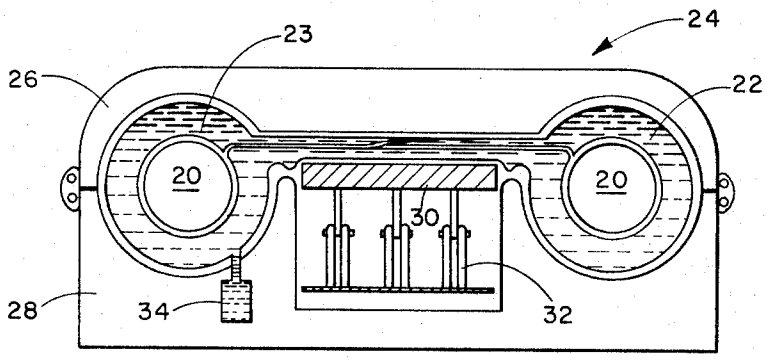

Fig. 1.

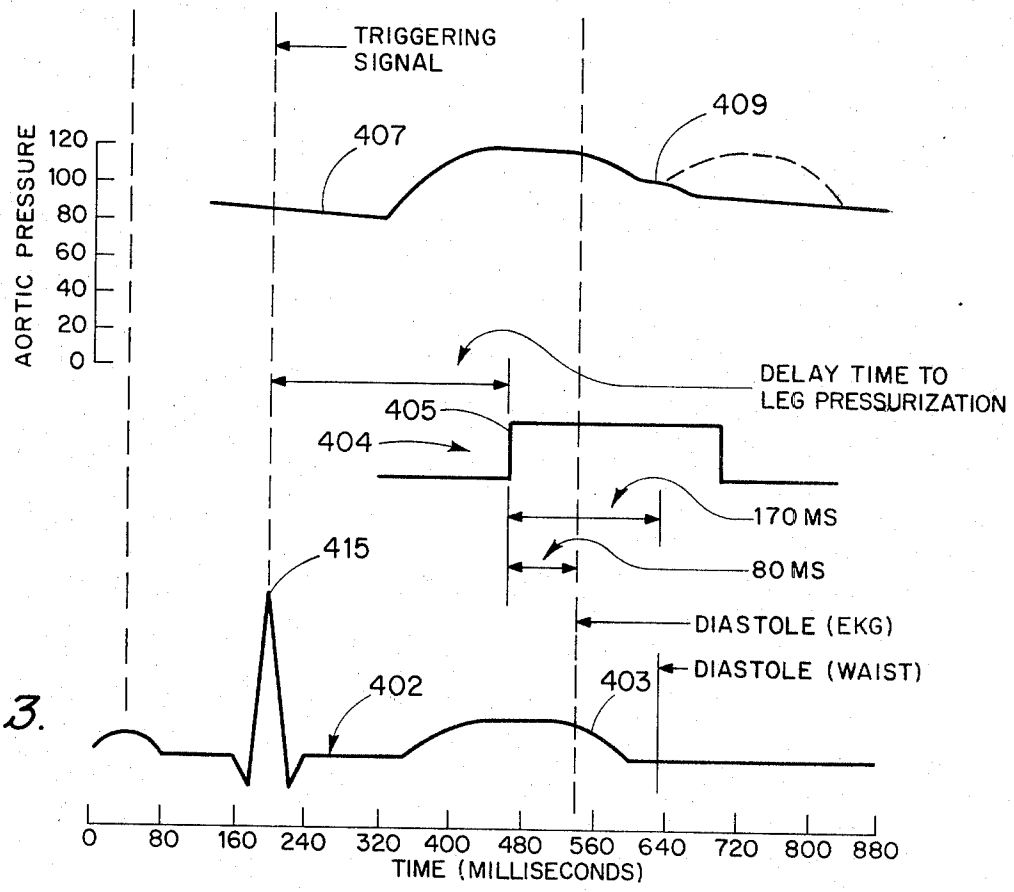
TRIGGERING SIGNAL
409
407
AORTIC PRESSURE
120
100
80
60
40
20
0
DELAY TIME TO LEG PRESSURIZATION
405
404
170 MS
80 MS
415
DIASTOLE (EKG)
DIASTOLE (WAIST)
402
403
0 80 160 240 320 400 480 560 640 720 800 880
TIME (MILLISECONDS)

Fig. 3.

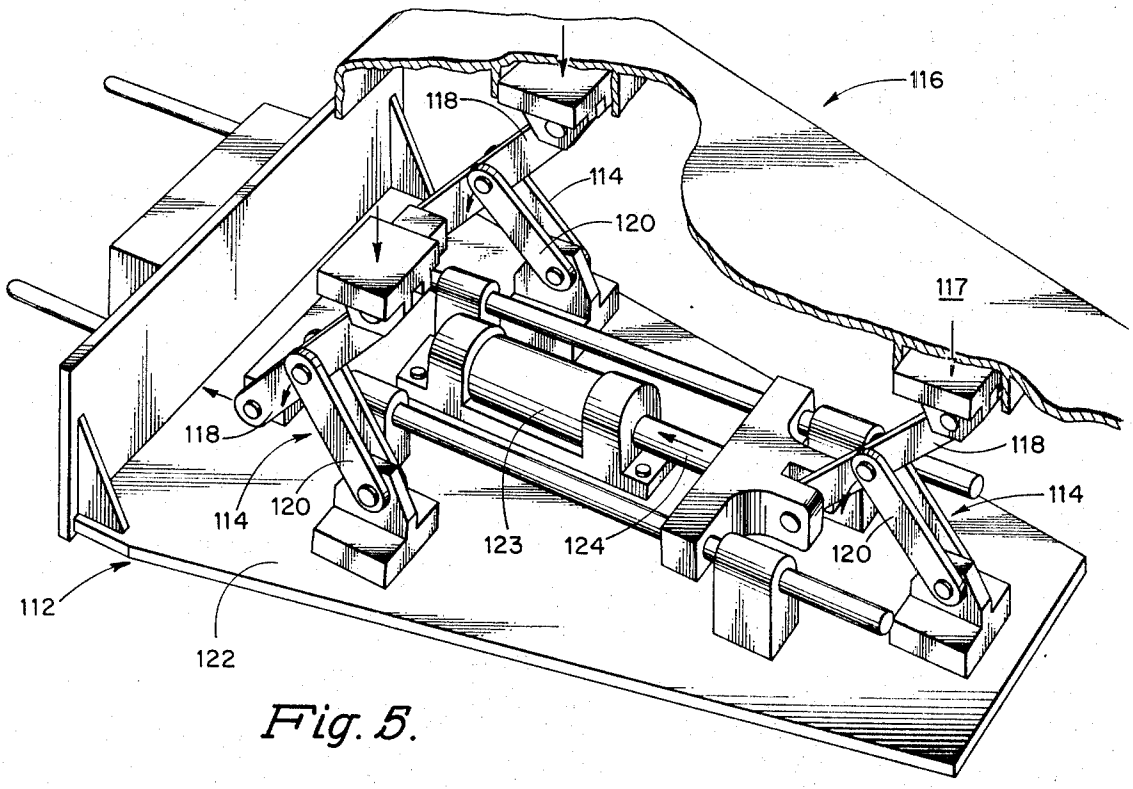
116
118
114
120
117
118
114
120
123
124
118
114
120
112
122

Fig. 5.

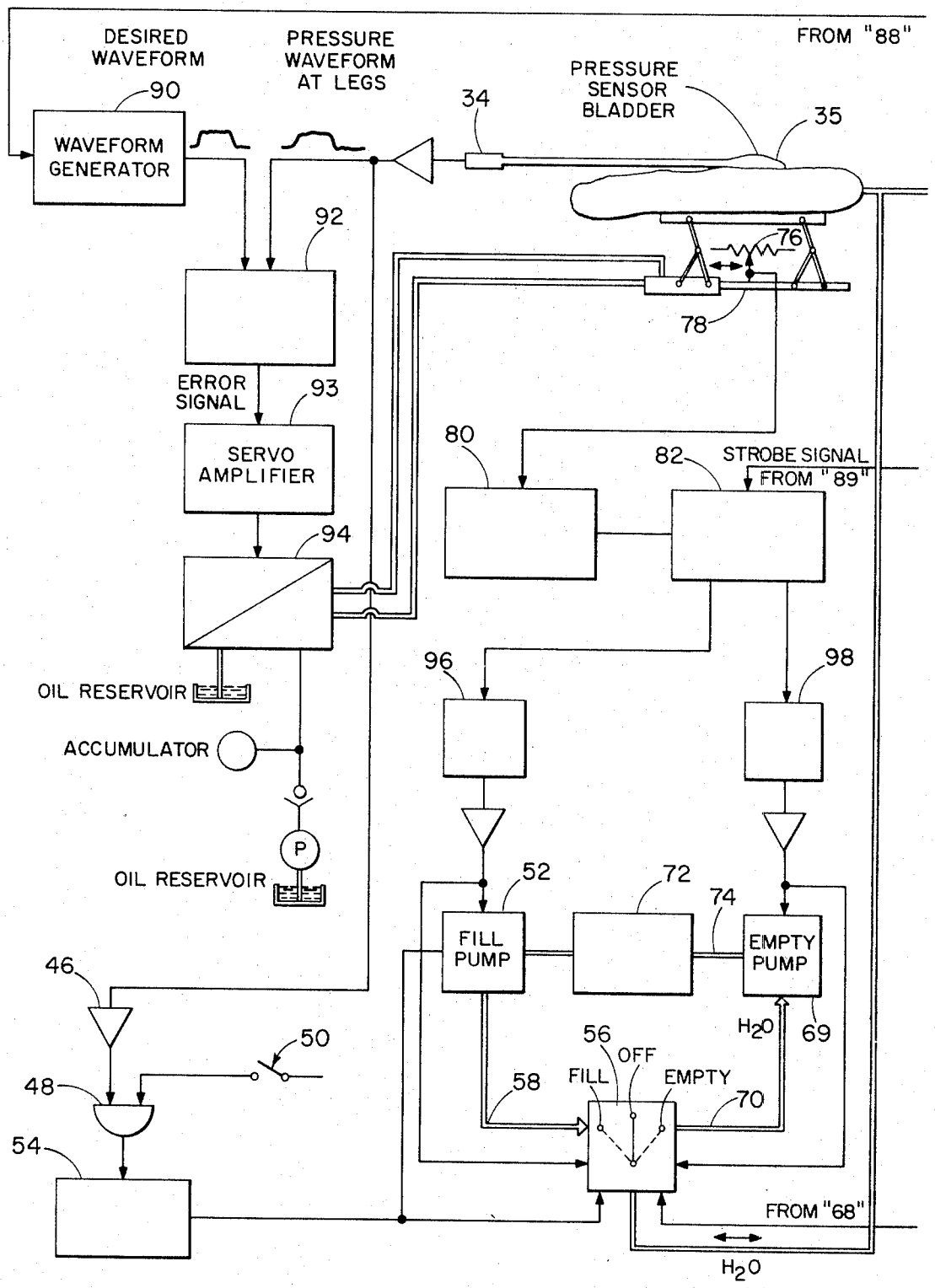
DESIRED WAVEFORM
PRESSURE WAVEFORM AT LEGS
FROM "88"
PRESSURE SENSOR BLADDER
90
WAVEFORM GENERATOR
34
35
92
76
78
ERROR SIGNAL
93
SERVO AMPLIFIER
80
82
STROBE SIGNAL FROM "89"
94
96
98
OIL RESERVOIR
ACCUMULATOR
P
OIL RESERVOIR
52
72
74
FILL PUMP
EMPTY PUMP
46
50
48
54
56
OFF
FILL
EMPTY
58
70
H2O
69
FROM "68"
H2O

Fig. 4a.

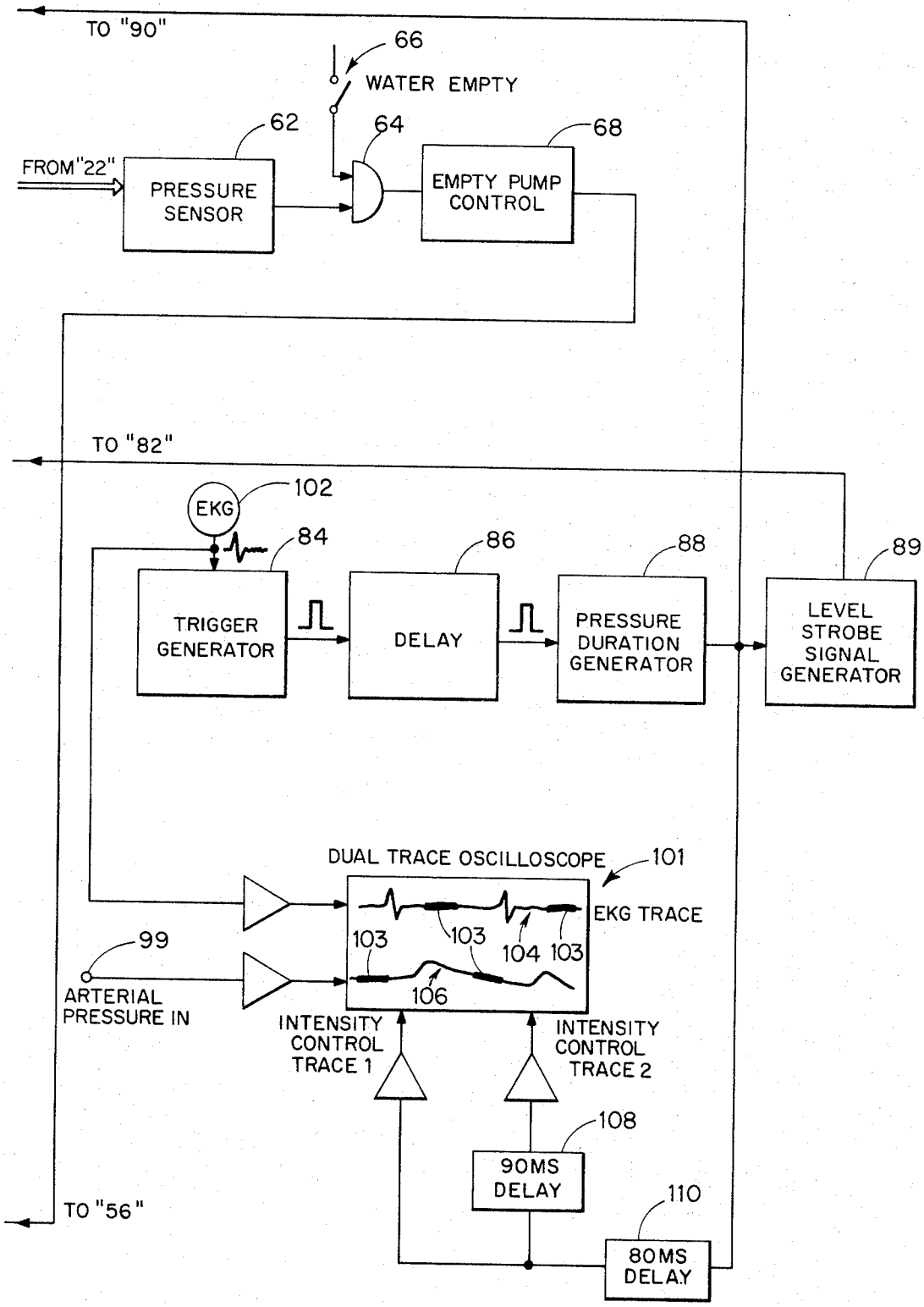
TO "90"
66
WATER EMPTY
62
64
68
FROM "22"
PRESSURE SENSOR
EMPTY PUMP CONTROL
TO "82"
EKG
102
84
86
88
89
TRIGGER GENERATOR
DELAY
PRESSURE DURATION GENERATOR
LEVEL STROBE SIGNAL GENERATOR
DUAL TRACE OSCILLOSCOPE
101
EKG TRACE
103
103
104
103
106
99
ARTERIAL PRESSURE IN
INTENSITY CONTROL TRACE 1
INTENSITY CONTROL TRACE 2
108
90MS DELAY
110
80MS DELAY
TO "56"

Fig. 4b.

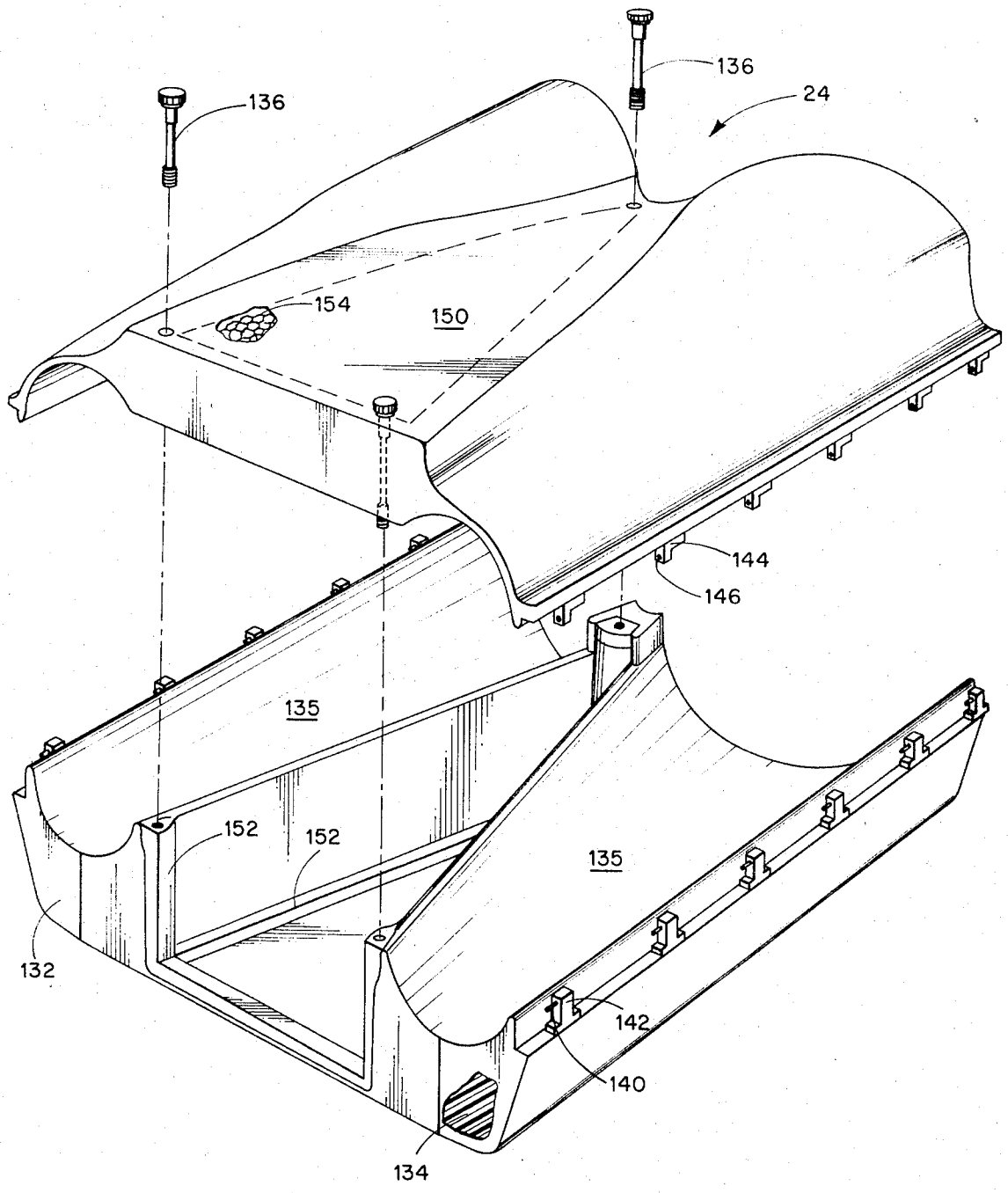

Fig. 6.

EXTERNAL PRESSURE CIRCULATORY ASSIST

BACKGROUND OF THE INVENTION

1. Field of the Invention

This invention relates to a novel apparatus for assisting blood flow through the circulatory system by synchronizing the pulsing of an external-assist means with the heartbeat. The invention also relates to a novel control processes achieved by use of the apparauts.

2. Background of the Invention

Methods for atraumatically assisting blood circulation of patients have been described in the art. In U.S. Pat. No. 3,303,841 to Dennis, a process is described whereby an external compressing of the lower part of the body expresses a volume of blood larger than the volume of blood pumped in a single stroke of the heart. The blood so expressed is forced back into the aorta and greater arterial vessels and thereby allows a reduction in ventricular workload while maintaining a satisfactory perfusion of blood during ventricular diastole. This general type of preocess has been elaborated upon in an article entitled "Synchronous Assisted Circulation" by Birtwell et al., appearing in *The Canadian Medical Association Journal* (Vol. 95, pages 652–664) on Sept. 24, 1966. In general, synchronous external pressure assist processes are distinguishable and advantageous over pre-existing counter-pulsation processes because the latter kind of precedure involves the cannulation of a major artery, use of an extra-corporeal blood handling device, the use of stringently sterile techniques and the necessity of administering anticoagulants to the patient. Moreover, the blood trauma or hemolysis produced by extra-corporeal pumping devices limits premissible duration of the assist procedure and compromises the condition of the patient. Finally, these trauma-requiring procedures are not only time consuming, they can present a very significant hazard to many patients, and they increase the risk factor in treating all patients.

Specific apparatus usable in a synchronous assist process is also disclosed in U.S. Pat. No. 3,403,673 to MacLeod. In general, that apparatus consists of a leg-encasing arrangement with means for cycling the pressure on the legs within the casing. The invention described in U.S. Pat. No. 3,403,673 has a number of problems associated with its use. For example, the constrictive-type seals thereof are believed to interfere with optimum blood circulation. Moreover, the inertia of the pressurizing system which includes elastic-type expansible linings is believed to interfere with obtaining optimum pressure-time profile on the legs. The apparatus suggested in such prior art has a number of drawbacks in that it is cumbersome to use; i.e., the patient is inserted into and removed from the device with excessive effort; and it is excessively difficult to achieve the proper pressure-pulsation profile and impossible to achieve what the inventors believe is the more advantageous mode of operation, i.e., at an ambient pressure at or below atmospheric pressure.

In U.S. Ser. No. 92,606, filed by William C. Birtwell on Nov. 25, 1970 and now U.S. Pat. No. 3,654,919 and commonly owned with the instant application, an improved external assist apparatus was described wherein the effective pressure on circulatory passages of the legs could be cycled to values at or below ambient pressure. This apparatus is a major advance in the art and has been extensively used as a vehicle for evaluating

the therapeutic potential of externally assisted circulation. Some results of this work are reported in a paper entitled "The Hemodynamic Evaluation of External Counterpulsation in Man" by T. J. Ryan et al., and presented at the American Heart Association Scientific Sessions held in Atlantic City, N.J., duing Nov. 1970.

At the present time the external counterpulsation method, e.g., as generally described in the Birtwell application, is the only controlled method of assist which requires no surgical intervention or sterile procedures, no use of anticoagulants or anesthesia, and produces no significant trauma. These factors are most important because they usually allow a much earlier use of the apparatus on a patient in, say, a state of circulatory shock than could be justified if another type of assist apparatus had to be used.

The selective application of positive and negative pressures to the portion of the vascular bed in the legs serves to control directly the volume of blood within that portion of the vascular bed and, hence, the pressures within the arterial system, particularly the pressures of the aorta. It is these controlled changes in aortic pressure that lead directly to a reduction in cardiac work, to increased perfusion of the systemic circulation, and to preferential perfusion of the myocardium.

During the past year, a considerable amount of research work has been carried out which confirms the important contributions which this approach can make in cardiac therapy. This success has stimulated further inventive effort which has resulted in improvements in the device which increase its physiological effectiveness, the versatility in the clinical environment, and its aesthetic appeal to the medical user.

SUMMARY OF THE INVENTION

Therefore, it is an object of the invention to provide an improved external pressure circulatory assist device which is readily and safely applied and authorized by hospital employees of ordinary skill and limited experience with such a device.

Another object of the invention is to allow such a person of ordinary skill to easily achieve a precise phasing of a system with the patient's heartbeat.

A further object of the invention is to provide apparatus which is sufficiently quiet to permit its convenient use within a hospital environment.

A further object is to provide apparatus which can operate with a minimum AC power supply requirement.

It is also an object to provide apparatus that is readily adaptable to patients having a relatively large range of leg sizes.

Still another object is to provide automatic control of the pressure waveform applied to a particular patient's legs in a circulatory assist process despite a large range of patient leg sizes, geometries, and firmness.

Another object is to provide apparatus which is light in weight and capable of being simply and rapidly applied to a patient.

Other objects of the invention will be obvious to those skilled in the art on reading the instant application.

The above objects have been achieved by constructing an external pressure circulatory assist system comprising one or more of the following advances in the art:

A. A Water-Fill System

The Water-Fill System is used to fill a leg-enclosing bladder with the correct volume of water for the particular patient. By correct volume is meant the particular volume that is suitable for the particular size and geometry of an individual patient's legs. It has been found also that because of patient movement into or out of the machine, a patient's legs can change their effective size during treatment. Thus the water-fill system if utilized not only to properly fill and automatically empty water from the leg encasing bladder; it is also used to add or remove water during treatment, thereby to maintain an efficient hydraulic pressure coupling between a mechanical pressure-inducing means to be described below and the patient's legs.

Water-Fill System and Pressure-Maintenance System

During the filling operation, a pressure sensor which is positioned between the shell which encloses the bladder and the bladder itself senses the pressure in the bladder. When the fill-pressure reaches a predetermined magnitude, usually about 20 millimeters mercury, the filling action is terminated by shutting off the fill pump. This filling operation is normally carried out with the platen in its upward position; i.e., in a bladder-compressing position.

Once the operation of the apparatus is initiated, a displacement sensor which is coordinated with the moving platen determines the position of the platen at the topmost position of each upward stroke. If this position is improper, water is pumped into or out of the bladder until the platen again reaches its proper range.

B. The Mechanical Pressurizing Means

In order to achieve adequate counterpulsation, it is necessary that the leg-enclosing bladder be capable of exerting a positive pressure on the legs during cardiac diastole and removing the pressure or producing a negative pressure on the leg (say, to minus 50 mm of mercury) during cardiac systole. The positive pressure applied is normally between about 150 to 250 millimeters of mercury.

It has been found most advantageous to achieve this pressure differential by applying a moving platen to a fairly large surface of the leg bladder containing the liquid. This platen is mounted beneath the leg bladder to provide a reciprocal vertical motion which controls the magnitude of the positive pressure. The pressure within the bladder increases as the platent rises against it and decreases to a minimum, usually about 20 millimeters of Hg, (or lower if negative pressures are used) as the platen falls to its lower level. If the negative pressure capability of the invention is to be used, the platen, bladder and the patient's body are enclosed from the waist down in a bag which is partially evacuated, say to a negative pressure of 70 millimeters of mercury below atmospheric pressure. The bag, although conveniently of flexible material, is held away from the legs by the rest of the apparatus so that a low pressure zone is maintained in which negative pressure can be realized. The bag or suction envelope is suitably sealed at the waist by means of a snug fit of its waistband with the body of the patient. The apparatus as described above has a normal operating cycle ranging within from about minus 50 millimeters of mercury to plus 250 millimeters of mercury. In operation, the pressure will be cycled with the lower pressure of the cycle corresponding with the systolic phase of the heart's action and the higher pressure corresponding with the diastolic phase.

The bladder which is advantageously a single-chambered blanket, is placed around the patient's legs and a rigid casing is used to enclose both the legs and the mechanical pressure-transmitting platent. The bladder is then filled with water until the entire region around the legs and above the platen contains water and so that the bladder is in contact with substantially the entire surface of the legs is fully expanded at the ankle and waist ends. From this point on, the vertical reciprocating action of the platen will provide the desired positive/negative-pressure cycling.

C. Pressurization Waveform Control

To achieve counterpulsation, the pressure on the patient's legs should fluctuate according to a desired waveform. The apparatus of the invention advantageously comprises a feature whereby the pressure at the legs is monitored, and made the source of a feedback signal which is directly compared to a signal which is representative of the desired waveform for the particular patient. The difference between the signal derived from the actual waveform and the signal representative of the desired waveform is called the "error signal." This error signal is amplified and used to control an electrically operated servo-valve which controls the flow of hydraulic fluid to a hydraulic cyclinder which drives the vertically-reciprocating platen. This flow is continuously adjusted in proportion to the error signal causing the pressure waveform at the transducer to be a suitable facsimile of the desired waveform.

The monitoring of the pressure at the legs is conveniently done by a water bladder, approximately 4 by 4 by ½ inches in dimensions, which bladder is placed between the bladder-enclosing shell and the bladder itself. Water in this sensor bladder is connected through a short tube to a pressure transducer which provides the required electrical signal of the actual pressure waveform. A particular advantage of this waveform control system is that it ensures the important characteristics of the desired waveform (e.g., duration, rise, and fall time) as applied to the patient's legs are not distorted. This is accomplished in spite of variations in hydraulic coupling between the platen and the legs resulting from such things as differences in leg geometry, size, and firmness from patient to patient, and any dynamic stretching of the bladder or distortions in the leg casing during operation.

Phasing the Pressure Cycle with the Cardiac Cycle

It can be shown that a deleterious, physiological effect may be suffered if the heart is taxed by an improper timing of the start of the external assist pressure wave with respect to the cycle of the heartbeat itself. Moreover, though this phenomenon may be readily understood by an operator, it is desirable to avoid chance of operator error and to simplify the operation of the device by providing a simple, accurate, automatic phasing means.

The inventors have provided a suitable visually monitored phasing control system whereby an arterial waveform is displayed on a multi-channel oscilloscope or other suitable display device the conjunction with an ECG waveform. The arterial pressure waveform is measured at any convenient place on the body. Normally, the wrist will provide the most convenient placement of the arterial wave pressure sensing device. The ECG signal will, as is normal, but obtained by place-

ment of sensors directly on the torso proximate the heart.

For this application, it is important to note that it takes about 80 milliseconds (ms) for a pressure wave, introduced in the femoral arteries with the apparatus of the invention, to reach the root of the aorta. The subsequent transmission from the root of the aorta to the wrist, where the arterial waveform is typically obtained, takes another 90 ms. It is important that the artificially induced positive pressure waves be produced in the legs sufficiently before diastole (80 ms) and that the pressure wave reaches the root of the aorta at the beginning of diastole.

The start of the augmented diastolic waveform, as seen at the wrist, which results from use of the applicants' apparatus, therefore will take place a total of 170 ms after the pressure if applied to the legs of the patient. Thus it is desirable to have the induced pressure wave initiated by a command signal timed to start 170 ms before the arterial wave, as seen at the wrist indicates the beginning of diastole and 80 ms before the ECG signal indicates the beginning of diastole. The beginning of diastole is indicated in the arterial wave by the so-called dicrotic notch in good approximation by the end of the so-called "T-wave" which is known to be positive indication of the relaxation of the left ventricle and the end of systole.

In the subject phasing system, the leg pressurization signal is used to intensify the ECG and arterial trace on the oscilloscope after this pressurization signal has been delayed for 80 and 170 ms respectively. The duration of intensification is the duration of each positive pressurization cycle of the leg. With this system, an operator can adjust the delay time until the intensified signal on the ECG or arterial wave form is located at the beginning of diastole. At that point leg pressurization can be triggered in correct synchronization with the cardiac cycle.

D. Leg Encasing Unit

A novel leg-encasing unit is employed which, by virtue of its light weight and geometry, provides an efficient casing within which to apply pressurization to the legs, yet is convenient and rapid to apply to a patient.

E. Platen Driving Mechanism

A novel mechanical linkage arrangement is provided for coupling the platen to the driving hydraulic cylinder whereby a suitable pressure-displacement characteristic is obtained at the platen for pressurizing the bladder while at the same time minimizing the input power requirements of the apparatus.

In this application and accompanying drawings there is shown and described a preferred embodiment of the invention and suggested various alternatives and modifications thereof, but it is to be understood that these are not intended to be exhaustive and that other changes and modifications can be made within the scope of the invention. These suggestions are selected and included for purposes of illustration in order that others skilled in the art will more fully understand the invention and the principles thereof and will be able to modify it and embody it in a variety of forms, each as may be best suited in the condition of a particular case.

In the drawings:

FIG. **1** is a schematic cross sectional view of that apparatus of the invention into which the legs of the patient fit.

FIG. **2** is a plan view of the leg-enclosing apparatus broken away to show the position of a reciprocating platen.

FIG. **3** is a chart indicating the relative timing of physiological events relative to the description of the invention.

FIG. **4***a* and **4***b*, taken together, form a schematic diagram of a unique control system for use in external pressure circulatory assist apparatus.

FIG. **5** is a perspective view of a platen assembly used to transmit pressure to a leg-surrounding bladder.

FIG. **6** is a perspective view of the rigid casing into which the patient's leg and bladders are placed and the means for quick connection of the casing.

With reference to FIGS. **1** and **2**, it is seen that legs **20** are placed within blanket-like bladder **22** which is filled with a non-compressible liquid, e.g., water **23.** Bladder **22** completely encloses legs **20** and is adapted for a snug fit within a rigid casing **24** formed of an upper shell **26** and a lower shell **28.** Just beneath bladder **22** and also within casing **24** is a platen **30** mounted for reciprocal vertical motion imparted by a mechanical linkage **32.** This linkage is driven by a hydraulic cylinder as better seen in FIG. **5.** A pressure-sensitive transducer **34** is placed in hydraulic communication with the bladder for use in monitoring the pressure therein; the particular function of this transducer will be described below.

FIG. **2** illustrates how an envelope **36** encloses the casing **24.** The envelope **26** and casing **24** are broken away to illustrate the relative position of platen **30.** It will be noted that the envelope extends beyond casing **24** and is adapted to form a snug fit with waist **38** of a patient **40.** A suction pump **39** will normally be used to maintain the normal environment within envelope **36** at a sub-atmospheric pressure.

There are certain cycle-phasing problems solved by the use of the more advantageous embodiment of the invention. If a patient is to be treated by pressure applied to his legs by pressure on bladder **22,** it will typically take about 80 milliseconds (ms) for such pressure to reach the heart and be synchronized with the heart's beating as monitored by an ECG signal device placed on the patient's chest. It will take another 90 ms for the pressure effect initiated at the legs to reach the radial artery as monitored by a sensing device placed thereon. FIG. **3** graphically (but still somewhat schematically) shows the time phenomena related to operation of the apparatus.

In one trace, there is shown an ECG curve **402** related in real time to a typical cardiac period of 840 ms. In this trace, the beginning of diastole is typically signified by the start of the drop of the curve at **403.** This drop at **403** should follow by about 80 ms, the rise **405** in leg pressure curve **404.** This is to allow the pressure-wave induced by the apparatus of the invention to arrive at the heart at the beginning of diastole after completion of a trip taking 80 seconds.

The curve **407** is of radial arterial pressure as measured at the wrist. The beginning of diastole in pressure curve **407** is signified by the so-called dicrotic notch **409** which takes place about 90 ms after the ECG reports the beginning of diastole. For convenience, the apparatus is normally triggered by sensing the prominent QRS peak **415** of the EKG.

Now referring to FIGS. **4***a* and **4***b*, an advantageous method of utilizing the above-described phenomena in

phasing and control of the apparatus is set forth schematically and can be described as follows:

A transducer-type pressure sensor **34** including a sensing bladder **35** is utilized to sense hydraulic pressure in bladder. If the pressure so sensed is less than 20 millimeters of mercury (mm of Hg), then a pressure-level amplifier **46** will provide an output to the "and-type" gate **48.** If during this low-pressure signal situation, the operator closes a water fill switch **50,** he will cause the "and gate" **48** to transmit a signal which will activate a fill pump **52** through pump control circuit **54** and simultaneously cause a multi-position, solenoid valve **56** to shift to its fill position, i.e., the position allowing water to flow from conduit **58** to conduit **60.** Thereupon water will flow into the bladder **22** until a pressure of 20 mm Hg is sensed by pressure sensor **34.** The signal from amplifier **46** will then drop consequently closing "and-gate" **48.** Thereupon, fill pump **52** is deactivated and solenoid valve **56** is shifted to its off position.

Water is emptied from bladder **22** by using an analagous system whereby pressure is sensed by sensor **62.** In a typical mode of operation, if the temperature sensed is above a minus 15 mm Hg value, a signal is sent to "and-gate" **64.** If "empty switch" **66** is closed, the gate **64** will allow a signal command to actuate pump control **68** and "empty pump" **69** and cause solenoid valve **56** to shift to its empty position, i.e., the position allowing water to flow from conduit **60** to conduit **70** and thence back to water reservoir **72** through **74.** The pump **69** will empty until a pressure of less than the illustrative minus 15 mm Hg is sensed. At that time the "and-gate" **64** will no longer sense the required signal from sensor **62,** and the pump **69** will be turned off and valve **56** will return to its off position.

It is noted that the above-described filling and emptying operations are generally used at the beginning and ending of use and not as continuous control means. Nevertheless it is emphasized that the ability to fill the bladder to a particular pre-determined pressure by automatic means rather than judgement means is highly advantageous.

During operation of the apparatus, the pressure within bladder **34** is maintained at its desired level by adding or removing water from the bladder system as follows:

A displacement sensing type transducer **76** is mounted on hydraulically-actuated rod **78.** Transducer **76** is adapted to provide an electrical signal output proportional to the linear advance of rod **78** at any given moment.

A normalized value of the position of cylinder **78** is provided by feeding the signal from transducer **76** into a displacement level sensor **80.** Thence the normalized signal is provided to a level comparator **82.**

A second imput to comparator **82** is derived as follows: An ECG signal from a patient being treated is fed into a trigger generator **84.** The trigger generator is so selected that it recognizes and responds to the so-called QRS complex rise of the ECG signal. (This rise is identified by numeral **415** in FIG. **4**). Thus when the QRS rise periodically occurs with each heart beat, an output is triggered which is fed to a manually controlled delay **86.** The purpose of delay **86** is to convert the original signal from first trigger generator **84** to a second time-delayed signal corresponding in real time with the beginning of cardiac diastole. This second signal enters a duration signal generator **88.** Generator **88** is so selected that the signal therefrom continues for the length of time that leg pressurization (as caused by pressure in bladder **34**) desired. This signal from generator **88** is fed to level comparator **82** through a level stroke signal generator **89.**

The signal from generator **88** is also fed to a waveform generator **90** which produces a wave whose amplitude and frequency is analogous to that desired for the leg pressurization sequence. A typical such wave will be trapezoidal-like in shape with a rise of 60 ms, a plateau of 250 ms, and a fall of 60 ms. This wave from generator **90** is fed to a wave form comparator **92** wherein it is continually compared to a signal derived from the actual bladder pressure wave as experienced by sensor **34.** The output of comparator **92** is a so-called "error signal," i.e., a signal which is indicative of the quality and strength of the difference between the desired wave signal from generator **90** and the actual wave signal from sensor **34.**

The error signal is used to control servo-valve **94** through a servo-amplifier **93** and thereby controls the supply of fluid to, and consequently the movement of, hydraulic cylinder **78.**

As has been described above, level comparator **82** receives two signals: one, a periodic signal from a duration signal generator **88,** via strobe signal generator **89** and the other from displacement level sensor **80.** Displacement level sensor **80** compares these two signals, one indicative of the actual position of hydraulic cylinder **78** at a given time. It is the periodic, or "strobe" signal from duration signal generator **88,** as modified by a level strobe signal generator **89,** which determine when this comparison is to be made. The comparison is most usefully made at the time platen **30** is in the upper-most portion of its stroke and pressing firmly against bladder **22.**

If level comparator **82** senses that the platen **30** is too high, output signal is provided to a "one shot" (monostable multivibrator) **96.** This "one shot" **96** will then turn on fill pump **52** and also position solenoid valve **56** for a 0.5-second fill period. The 0.5-second fill periods will continue during each cardiac period (i.e., each heartbeat) until the water volume in bladder **22** is sufficient so that the platen **30** is within an acceptable displacement range at the top of its stroke.

If, on the other hand, the level comparator **82** receives a signal that the platen **30** is too low in its stroke, the empty pump is turned on for one half second in each cardiac cycle by activation of the "one shot" device **98** and the empty pump **69.** Water is then pumped out of the bladder until the platen achieves a desired rise during its stroke.

The general operation of the system is described above. The manner in which the operation is phased into correct synchronization with the heartbeat is described below:

A signal from an arterial pressure-sensing device **99** is fed into a dual trace oscilloscope **100** along with a signal from ECG device **102.** The duration of an intensification of these signals is the duration of a pressure command signal as received from duration signal generator **88** and appears as intensifications of ECG trace **104** and arterial trace **106.** Delay devices **108** and **110,** of 90 milliseconds and 80 milliseconds respectively, cause the pressure command signal to appear on both waveforms in approximately correct time relationship

referenced to the actual ECG and arterial pressure. Delay **86** is used to bring the intensification signal into register with diastolic period as viewed on either the ECG or arterial traces, thereby simultaneously phasing the pressurization wave to the cardiac cycle.

The operator of the apparatus can also have variable control means for changing the characteristics of the duration signal generator **88** to provide the intensified signal duration which is required for a particular patient. On the oscilloscope **101**, this duration will show up as intensifications **103** of the oscilloscope traces.

It is to be noted in reference to waveform generator **90** that a typical generated wave will normally have a total positive pressure period of from about 250 to about 300 milliseconds. The rise and fall in pressure will take about 60 ms each and rise will start about 80 ms before diastole. In general, it is desirable to select period-determining device which can maintain positive-pressure periods of from about 150 ms to about 500 ms.

Referring generally to FIG. **5**, a mechanical assembly **112** comprises a base **122** on which a hydraulic cylinder **123** is mounted. Attached to cylinder **123** is a reciprocating, operating rod **124** connected, through a mechanical actuating means **114**, to platen **116**. Platen **116** has a rigid truncated-triangle like planar surface **117** for engagement with the bladder. The cylinder moves through a short stroke sufficient to import about a 2-inch vertical travel to platen **16**.

FIGS. **5** and **6** show the hydraulically-actuated platen assembly **112**.

It is important to note in connection with this platen assembly that one of the problems encountered in design of hospital installations is to assure they can be used with a reasonably available power source. This problem is particularly critical in design of the apparatus of the invention with its suction requirement, its hydraulic-pressurizing feature and its control circuitry. Thus platen assembly **112** is constructed to minimize the power requirement by utilizing a lifting means **114** whereby the product of the vertical travel of platen **116** and the resistance it meets during travel is maintained at a relatively constant value. This is to say that in the lower portion of the stroke where the reaction pressure of the bladder against the platen is relatively low, the mechanical linkage between the hydraulic cylinder and the platen is so designed to provide a greater displacement in trade-off for pressure. At the upper portion of the stroke, where bladder reaction pressure increases displacement of the platen is reduced to obtain a pressure advantage. In this manner, the stroke requirement of the hydraulic cylinder and, consequently the power losses from pressure drops in the servo-valve, are held to a minimum value. Since power used in the hydraulic system is proportional to stroke this feature and minimize input power requirements.

This effect is achieved by use of pivotally mounted support levers **118** and pivotally mounted lift levers **120**. Because of the relative length and angles of levers **118** and **120**, as operating rod **124** moves to the right, platen **116** drops at an accelerating velocity to its lower position. As rod **124** moves back to the left, the platen is raised until the angle between lever **118** and **120** is about 56°. As the platen rises, it decelerates but also meets more resistance from the bladder.

As has been illustrated schematically in FIG. **2**, a rigid housing or casing **24** is used to enclose the bladder and its mechanical pressurizing means. This casing should be as light as is possible without compromising the rigidity thereof.

As is seen in FIGS. **6** through **11**, leg casing **24** comprises a unitary upper shell **131** and a unitary lower shell **132**. The shells are advantageously formed of plastic material and are internally reinforced with a rigid, low-density, organic-resin foam such as a polyurethane foam **134**.

A particularly advantageous aspect of the casing **24** is the quick connect and disconnect means. Bolt connectors **136**, mounted generally between the leg rest are formed of bolts which are normally captive within upper shell **131**. The bolts are provided with large heads which facilitate their quick connection by screwing into lower shells **132**.

Latch connectors mounted in inserts along the outer periphery of lower and outer shells comprise a pin **140** which is so positioned on connector member **142** that when connector member **144** is moved downwardly, it will not contact pin **140** but, once lowered a lateral movement of the upper shell wil cause the pin to lock into aperture **146** of member **144**. Once this latching is achieved, bolts **136** may be tightened and the operation may proceed.

Another important aspect of the invention is that whereby applicants have been able to combine a relatively simple construction, having only a single fluid bladder and an upper and lower casing member, and yet achieve a device suitable for excellent pressure control. This result was accomplished by providing a unitary upper leg casing member **131** and a unitary lower leg casing member **132**, each of which comprise two truncated semi-conical leg-receiving compartments **135**. These compartments are connected by a thinner zone (see FIG. **1**), which allows a single blanket-shaped bladder to be wrapped about the patient's legs. To avoid any substantial deflection by the bladder, say deflection of over about one-sixteenth of an inch at the pressure mid-point, it was found necessary to place triangular brace means between the leg-enclosing compartments and casing member and connect them together. This arrangement allows even light plastic materials of construction, such as fiberglass reinforced polyester to be used in constructing the device. The leg-enclosing zones themselves tend to resist substantial deflection or deformation because of the resistance of hoop stresses which is a result of their conical shape.

In FIG. **6**, connectors **136** connect an upper traingular brace means **150** to a lower brace means **152**. The upper brace means is formed out of a resin-type honeycomb material **154**.

Necessary connections, both electrical and hydraulic are made through the envelope **36** and casing **34** as are required.

In the illustrated embodiment of the invention, the platen has a surface area of about 100 square inches and a stroke of about 2 inches. This apparatus provides a displacement capacity of about 200 cubic inches and this has been found to be entirely adequate not only to meet the displacement requirements resulting from the compressability of a patient's legs, but also when combined with pressure-wave monitoring and control system as disclosed above, to enable the use of materials of construction which have some limited distensibility.

In general, the platen and its actuating device should be selected to have a displacement capacity of at least

about 100 cubic inches. The vertical stroke of the platen is advantageously maintained at less than about 3.5 inches to avoid design and control problems associated with excessive velocity and the mechanical and hydraulic inertice associated therewith.

It is also to be understood that the following claims are intended to cover all of the generic and specific features of the invention herein described and all statements of the scope of the invention which might be said to fall therebetween.

What is claimed is:

1. In apparatus for applying external pressure circulatory assist action to the legs of a patient in cyclic synchronization with the heartbeat of said patient by pressurizing said legs, the improvement wherein said apparatus comprises:

A. a unitary bladder adapted for wrapping about a patient's legs and holding a quantity of liquid,

B. mechanical displacement means in contact with outside wall of said bladder and forming means to press against said bladder, said means forming the primary means for obtaining the aforesaid pressure assist action, and

C. a unitary upper leg casing member and a unitary lower leg casing member having means, said casing members adapted for attachment to form a compartment to enclose said bladder, said casing members having sufficient brace means between leg sections thereof to avoid any substantial outward deflection of said leg casing members during said pressurizing of said fluid.

2. Apparatus as defined in claim **1** wherein said brace means comprise:

A. triangular brace means between each of leg-enclosing zones of each of the upper and lower casing members, and

B. a plurality of fastening means connecting said brace means together.

3. Apparatus as defined in claim **2** wherein said leg-enclosing zones are conical in shape and adapted to dissipate stresses exerted thereon as hoop stresses, thereby resisting any substantial deflection or deformation of said zones.

4. Apparatus as defined in claim **3** wherein said pressurizing means has a displacement capacity of at least 100 cubic inches and comprises means for actuating said platen through a stroke length of up to about 3.5 inches.

5. Apparatus as defined in claim **2** wherein said casing members, bladder and displacement means are all placed within an envelope forming means to maintain sub-atmospheric pressure therearound.

6. Apparatus as defined in claim **1** wherein said mechanical displacement means is placed within said compartment formed by said casing and also comprises a platen and a power linkage forming means to impart a power stroke thereto characterized by a substantial loss of velocity of said platen as the platen rises against said bladder.

7. Apparatus as defined in claim **6** wherein said pressurizing means has a displacement capacity of at least 100 cubic inches and comprises means for actuating said platen through a stroke length of up to about 3.5 inches.

8. Apparatus as defined in claim **1** wherein said casing members, bladder and displacement means are all placed within an envelope forming means to maintain sub-atomspheric pressure therearound.

9. Apparatus as defined in claim **8** wherein said pressurizing means has a displacement capacity of at least 100 cubic inches and comprises means for actuating said platen through a stroke length of up to about 3.5 inches.

10. In apparatus for applying external pressure circulatory assist action to the limbs of a patient in synchronization with the heartbeat of said patient, and wherein said assist is achieved by pressurizing a fluid-filled bladder surrounding said limbs, the improvement wherein said apparatus comprises a mechanical pressurizing member positioned generally between said limbs and in contact with an outside wall of said bladder and forming means to press against said bladder, said bladder adapted for reciprocal movement in contact with said bladder, said mechanical means comprising a power-transmitting linkage forming means to impart a power stroke characterized by a substantial loss of velocity of said pressurizing member as the pressure of said contact is increased in the bladder during said stroke.

11. Apparatus as defined in claim **10** wherein said bladder and mechanical pressurizing means are enclosed in a rigid casing, wherein the casing is enclosed in an envelope, and wherein a suction pump is operably connected to the interior of said envelope forming means to maintain a sub-atmospheric pressure within said envelope of between atmospheric pressure and about minus 100 mm of mercury below atmospheric pressure.

12. Apparatus as defined in claim **11** wherein said pressurizing means has a displacement capacity of at least 100 cubic inches and comprises means for actuating said platen through a stroke of up to about 3.5 inches.

13. Apparatus as defined in claim **10** wherein said pressurizing means has a displacement capacity of at least 100 cubic inches and comprises means for actuating said platent through a stroke of up to about 3.5 inches.

14. In apparatus for applying external pressure circulatory assist action to the limbs of a patient in cyclic synchronization with a heartbeat of said patient, and wherein said assist is achieved by means for pressurizing a fluid-filled bladder surrounding said limbs, the improvement wherein pump means is provided for adding to or subtracting fluid from said bladder, said pump means being responsive to the pressure within said bladder, through a bladder-pressure sensing means and a control circuit, and wherein said pump is responsive to said sensing means to receive an independent command signal therefrom on each heartbeat cycle of said patient.

15. Apparatus as defined in claim **14** wherein said pump means has an operating period of about 0.5 seconds.

16. Apparatus as defined in claim **14** comprising a reciprocating mechanical member forming displacement means to engage said bladder and pressurize the fluid therein.

17. Apparatus as defined in claim **16** wherein said pressure-sensing means is an indirect sensing means comprising a displacement-sensing monitor adapted to sense the position of said mechanical pressure-transmitting device, to transmit a signal indicative of

said position, and consequently indicative of said pressure in said bladder.

18. Apparatus for applying external pressure assist action to the limbs of a patient in cyclic synchronization with the heartbeat of said patient, wherein said assist is achieved with means for transmitting pressure to said limbs through a fluid-filled bladder surrounding said limbs, the improvement wherein the apparatus includes a visual cycle-phasing monitor comprising:

A. a multi-channel display device adapted to display
1. an EKG trace, and
2. a trace derived from an arterial pressure sensor,

B. means for visually displaying of the relative time duration of a pressure command signal on said traces, and

C. manual means to adjust the relative timing and duration of said pressure command signal, while simultaneously achieving a visual adjustment of said signal to bring it into the desired relationship to said EKG trace, or arterial trace.

19. Apparatus for applying external pressure assist action to the limbs of a patient in cyclic synchronization with the heartbeat of said patient, wherein said assist is achieved with means for transmitting pressure through a hydraulic cylinder to said limbs through a fluid-filled bladder surrounding said limbs, the improvement wherein the apparatus includes

A. an ideal pressure waveform generator means,

B. actual leg pressure waveform sensing means,

C. means for continually comparing said ideal and actual waveforms, and

D. variable valve means, responsive to a signal from said comparing means, to modify fluid flow to said hydraulic cylinder and thereby more nearly achieve said ideal-pressure waveform.

20. Apparatus as defined in claim **19** comprising:

A. a multi-channel oscilloscope adapted to display
1. an EKG trace, and
2. a trace derived from an arterial pressure sensor,

B. means for visually displaying of the relative time duration of a pressure command signal on said traces, and

C. manual means to adjust the relative timing and duration of said pressure command signal, while simultaneously achieving a visual adjustment of said signal to bring it into the desired relationship to said EKG trace.

21. Apparatus as defined in claim **20** wherein pump means is provided for adding to or subtracting fluid from said bladder, said pump means being responsive to the pressure within said bladder, through a bladder-pressure sensing means and a control circuit, and wherein said pump is responsive to said sensing means to receive an independent command signal therefrom on each heartbeat cycle of said patient.

22. Apparatus as defined in claim **1** wherein said pressurizing means has a displacement capacity of at least 100 cubic inches and comprises means for actuating said platen through a stroke length of up to about 3.5 inches.

23. In apparatus as defined in claim **1** for applying external pressure circulatory assist action to the limbs of a patient in cyclic synchronization with a heartbeat of said patient, and wherein said assist is achieved by means for pressurizing a fluid-filled bladder surrounding said limbs, the improvement wherein pump means is provided for adding to or subtracting the fluid from said bladder, said pump means being responsive to the pressure within said bladder, through a bladder-pressure sensing means and a control circuit, and wherein said pump is responsive to said sensing means to receive an independent command signal therefrom on each heartbeat cycle of said patient.

24. Apparatus as defined in claim **23** wherein said pump means has an operating period of about 0.5 seconds.

25. Apparatus as defined in claim **24** wherein said leg-enclosing zones are conical in shape and adapted to dissipate stresses exerted thereon as hoop stresses, thereby resisting any substantial deflection or deformation of said zones.

26. In apparatus as defined in claim **23** for applying external pressure circulatory assist action to the limbs of a patient in cyclic synchronization with a heartbeat of said patient, and wherein said assist is achieved by means for pressurizing a fluid-filled bladder surrounding said limbs, the improvement wherein pump means is provided for adding to or subtracting fluid from said bladder, said pump means being responsive to the pressure within said bladder, through a bladder-pressure sensing means and a control circuit, and wherein said pump is responsive to said sensing means to receive an independent command signal therefrom on each heartbeat cycle of said patient.

27. Apparatus as defined in claim **26** wherein said pump means has an operating period of about 0.5 seconds.

28. Apparatus as defined in claim **27** wherein said leg-enclosing zones are conical in shape and adapted to dissipate stresses exerted thereon as hoop stresses, thereby resisting any substantial deflection or deformation of said zones.

29. Apparatus as defined in claim **26** comprising a reciprocating mechanical member forming displacement means to engage said bladder and pressurize the fluid therein.

30. Apparatus as defined in claim **29** wherein said pressure-sensing means is an indirect sensing means comprising a displacement-sensing monitor adapted to sense the position of said mechanical pressure-transmitting device, to transmit a signal indicative of said position, and consequently indicative of said pressure in said bladder.

31. Apparatus as defined in claim **1** for applying external pressure assist action to the limbs of a patient in cyclic synchronization with the heartbeat of said patient, wherein said assist is achieved with means for transmitting pressure to said limbs through a fluid-filled bladder surrounding said limbs, the improvement wherein the apparatus includes a visual cycle-phasing monitor comprising:

A. a multi-channel display device adapted to display
1. an EKG trace, and
2. a trace derived from an arterial pressure sensor,

B. means for visually displaying of the relative time duration of a pressure command signal on said traces, and

C. manual means to adjust the relative timing and duration of said pressure command signal, while simultaneously achieving a visual adjustment of said signal to bring it into the desired relationship to said EKG trace, or arterial trace.

32. Apparatus as defined in claim **31** wherein said leg-enclosing zones are conical in shape and adapted to

dissipate stresses exerted thereon as hoop stresses, thereby resisting any substantial deflection or deformation of said zones.

33. Apparatus as defined in claim **31** wherein said pressurizing means has a displacement capacity of at least 100 cubic inches and comprises means for actuating said platen through a stroke of up to about 3.5 inches.

34. Apparatus as defined in claim **16** for applying external pressure assist action to the limbs of a patient in cyclic synchronization with the heartbeat of said patient, wherein said assist is achieved with means for transmitting pressure to said limbs through a fluid-filled bladder surrounding said limbs, the improvement wherein the apparatus includes a visual cycle-phasing monitor comprising:

A. a multi-channel display device adapted to display
1. an EKG trace, and
2. a trace derived from an arterial pressure sensor,

B. means for visually displaying of the relative time duration, and

C. manual means to adjust the relative timing and duration of said pressure command signal, while simultaneously achieving a visual adjustment of said signal to bring it into the desired relationship to said EKG trace, or arterial trace.

35. Apparatus as defined in claim **33** wherein said leg-enclosing zones are conical in shape and adapted to dissipate stresses exerted thereon as hoop stresses, thereby resisting any substantial deflection or deformation of said zones.

36. Apparatus as defined in claim **34** wherein said pressure-sensing means is an indirect sensing means comprising a displacement-sensing monitor adapted to sense the position of said mechanical pressure-transmitting device, to transmit a signal indicative of said position, and consequently indicative of said pressure in said bladder.

37. Apparatus as defined in claim **23** wherein said leg-enclosing zones are conical in shape and adapted to dissipate stresses exerted thereon as hoop stresses, thereby resisting any substantial deflection or deformation of said zones.

38. Apparatus as defined in claim **1** for applying external pressure assist action to the limbs of a patient in cyclic synchronization with the heartbeat of said patient, wherein said assist is achieved with means for transmitting pressure through an hydraulic cylinder to said limbs through a fluid-filled bladder surrounding said limbs, the improvement wherein the apparatus includes

A. an ideal pressure waveform generator means,

B. actual leg pressure waveform sensing means,

C. means for continually comparing said ideal and actual waveforms, and

D. variable valve means, responsive to a signal from said comparing means, to modify fluid flow to said sydraulic cylinder and thereby more nearly achieve said ideal-pressure waveform.

39. Apparatus as defined in claim **38** comprising:

A. a multi-channel oscilloscope adapted to display
1. an EKG trace, and
2. a trace derived from an arterial pressure sensor,

B. means for visually displaying of the relative time duration of a pressure command signal on said traces, and

C. manual means to adjust the relative timing and duration of said pressure command signal, while simultaneously achieving a visual adjustment of said signal to bring it into the desired relationship to said EKG trace.

40. Apparatus as defined in claim **39** wherein pump means is provided for adding to or subtracting fluid from said bladder, said pump means being responsive to the pressure within said bladder, through a bladder-pressure sensing means and a control circuit, and wherein said pump is responsive to said sensing means to receive an independent command signal therefrom on each heartbeat cycle of said patient.

41. Apparatus as defined in claim **40** wherein said pump means has an operating period of about 0.5 seconds.

42. Apparatus as defined in claim **38** wherein said pump means has an operating period of about 0.5 seconds.

43. Apparatus as defined in claim **39** wherein said pump means has an operating period of about 0.5 seconds.

* * * * *