Dec. 18, 1956 H. C. POLLITZ 2,774,477

SCREEN CLAMPING MECHANISM

Filed Dec. 6, 1954

Fig. 2

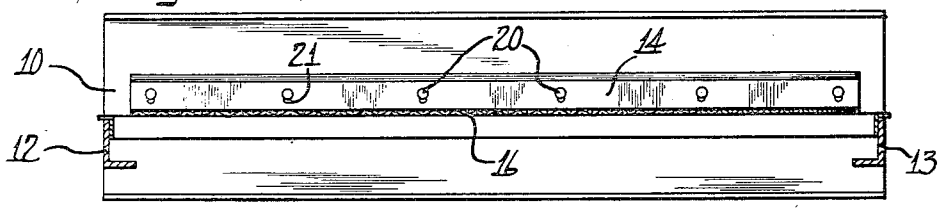

Fig. 1

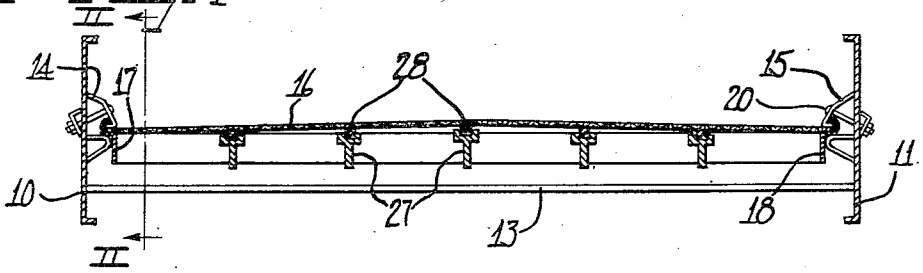

Fig. 3

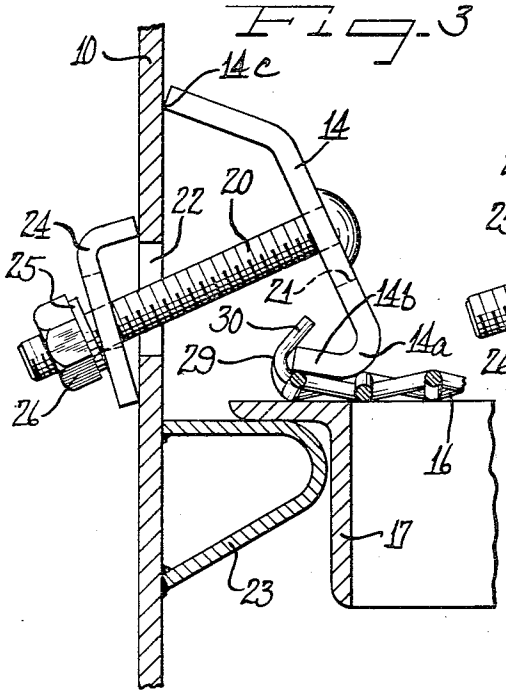

Fig. 4

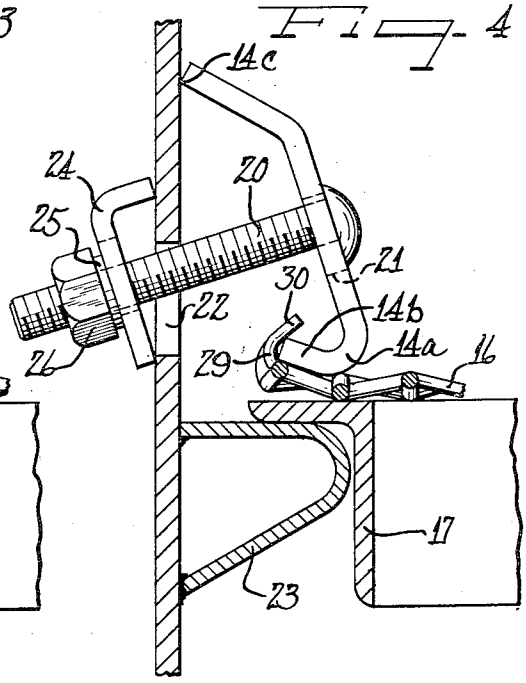

Inventor

Harold C. Pollitz

Attys

United States Patent Office

2,774,477

Patented Dec. 18, 1956

1

2,774,477

SCREEN CLAMPING MECHANISM

Harold C. Pollitz, Cedar Rapids, Iowa, assignor to Iowa Manufacturing Company of Cedar Rapids, Iowa, Cedar Rapids, Iowa, a corporation of Iowa

Application December 6, 1954, Serial No. 473,400

2 Claims. (Cl. 209—403)

The present invention relates to the construction of material gradation screens and, more particularly, is concerned with the provision of novel and substantially improved clamping means for securing such screens to their supporting frame work.

In conventional practice, screens for controlling the size of materials such as crushed rock, coal, gravel, and other similar items are generally constructed of interwoven wire. This wire mesh screen is supported in a steel framework in a taut condition and, in order to prevent deformation of the screen under the weight of material being screened, spaced supports are ordinarily provided under the central portion of the wire mesh. In order to increase the screening capacity most modern day screens are constructed for mechanical agitation for which it is desired that the screen be maintained in a near flat, taut condition.

In order to provide a taut screen of the type above indicated as desirable, many screen clamping devices have been contrived by those working in the art. However, to my knowledge, none of these prior art constructions provide an arrangement whereby the application of stretching forces to the peripheral edges of the screen simultaneously acts to force the center of the screen downwardly against the screen supports. Instead, the constructions of which I am aware tend, upon tightening, to provide an upwardly acting component of force at the center of the screen. In use, this upwardly acting component tends to cause the screen to bow slightly away from the supports. Although it has sometimes been the practice to raise the middle supports to provide a fully supported screen surface, such an arrangement still does not prevent separation of the screen from the supports in the absence of more complete control.

According to the present invention a wire mesh screen is provided having upwardly turned wire ends throughout the peripheral edge of the screen. The upwardly, and slightly backwardly, turned ends are caught upon the hooked end of a novelly constructed clamping channel. Immediately below the turned up ends of the screen, a screen side support, extending along the periphery of the screen, is rigidly positioned. The clamping channel is adjustably mounted in a free-floating manner and is positioned so that upon the application of tightening forces urging the channel outwardly relative to the screen, the hooked end of the channel will tend to pull the outermost extremity of the screen upwardly and a point immediately inwardly of said outermost point downwardly against the screen side supports. This action causes a peripheral bending moment on the screen causing the center of the screen to be urged downwardly firmly against the screen supports thereby providing an extremely rigid and substantially flat screen. Further, upon tightening operations subsequent to the initial operation, the action of the clamping structure of the present invention is identical throughout the wide range of adjusted positions such that the bending moment above described is always present to constantly position the screen in the desired

2

manner with a downward force on the entire width of the screen.

It is, therefore, an object of the present invention to provide an improved clamping structure for screens wherein a taut, near flat screen surface may be maintained at all times.

A further object of the present invention is the provision of a screen clamping device which provides a constant clamping action throughout a wide range of adjusted positions.

Yet a further object of the present invention is to provide a screen clamping construction whereby a wire mesh screen may be stretched while at the same time forcing the center portion thereof in a downward direction.

A feature of the present invention is a screen-holding side channel having a hooked screen engaging edge constructed to engage the peripheral edge of the screen throughout a substantial area of the hook.

Another feature of the invention is a novel free floating side channel mouth for contacting the peripheral edges of a screen and to permit a substantially straight-line tightening action thereof.

Still another object of the invention is to provide a much simplified and yet highly effective improved wire mesh screen support and tightening apparatus therefor.

Still other and further objects and features of the present invention will at once become apparent to those skilled in the art from a consideration of the attached drawings wherein a preferred form of the present invention is shown by way of illustration and, wherein:

Figure 1 is a cross-sectional view of a near flat wire mesh screen taken along a line extending transversely thereof and illustrating a screen assembly in accordance with the concepts of the present invention;

Figure 2 is a cross-sectional view of the screen assembly shown in Figure 1 and taken along the line II—II thereof;

Figure 3 is an enlarged view of one side of the screen support and clamp shown in Figure 1 in an initial adjusted position; and

Figure 4 is another enlarged view of the screen support and clamping construction shown in Figure 1 in a more advanced state of tightening than shown in Figure 3.

As shown on the drawings:

As may be seen from a consideration of Figures 1 and 2, a generally rectangular screen frame is provided comprising screen frame sides **10** and **11** rigidly connected by angle iron cross braces **12** and **13**. The members **10**, **11**, **12** and **13** are preferably welded together to provide, effectively, an integral rectangular steel framework.

As shown, each screen frame side is provided with a longitudinally extending screen retainer or clamping channel **14**, **15** which grip the peripheral edges of the screen **16** and rigidly secure the screen against the respective screen side supports **17** and **18** of a rectangular angle iron frame. At intervals along the length of the clamping channel **14** and **15**, clamping bolts **20** are loosely passed through slots **21** and **22** in the clamping channel and frame side channel **14** and **10**, respectively. Likewise, a longitudinally formed channel **23** is secured to the screen frame side for supporting the side screen supports **17** and **18** on the respective frame side channels **10** and **11**. Each of the bolts **20** is provided with an angle washer **24**, a lock washer **25** and a conventional nut or lock nut **26** for drawing the clamping channels toward the vertical portion of the screen frame sides.

The screen **16** is constructed in the conventional manner of woven wire strands and is supported in a horizontal plane by means of vertical support bars **27** which preferably carry resilient screen support bumpers **28** to aid

in dampening vibration and noise. The end of the transversely extending wires of the screen **16** are bent upwardly as at **29** and slightly backwardly as at **30** to form a plurality of upstanding retaining hooks. The clamping channel **14** is complementarily provided with a reversely arcuately formed bend **14***a* and a slightly backwardly turned terminal edge **14***b* which cooperates with the curved portions **29** of the screen **16**.

As will be noted from a consideration of Figures 3 and 4, the upwardly deflected portion **14***b* of the clamping channel **14** ends at a point higher than the lowermost point of the curvature at **14***a* throughout the range of normal adjustment. Accordingly, the screen **16** will at all times be contacted by both the terminal edge **14***b* and the curved portion **14***a*. This two point contact causes a downwardly acting deflecting force to be placed inwardly of the peripheral edge of the screen in a manner described more fully below.

In operation, the screen **16** is installed between the screen frame side **10** and **11** by loosening the bolts **20** to a point where the clamping channels **14** and **15** may be slipped over the upwardly projecting wire ends **30**. The bolts are then progressively and evenly tightened, tending to stretch the screen taut over the supports **28** and in edge contact with the supports **17**, **18**. As will be observed from a consideration of Figures 3 and 4, the clamping channels **14** and **15** pivot about their upper edges, as for example at **14***c* during the tightening operation. At the same time, the force supplied by the bolts **20** has a downward component as a result of the inclination of the axis of the bolt. This downward component of the force urges the screen firmly against the screen side support **17**. This force is, however, only a biasing force rather than a positive one and, accordingly, upon the application of increasing forces by the bolt **20** and in view of the fact that the end **14***a* of the clamping channel **14** cannot move downwardly, the point **14***c* is forced to move, in a sliding fashion, upwardly as the point **14***b* moves toward the side frame **10**.

This combination sliding and pivoting motion of the clamping channel **14** causes, in combination with the arcuate lower edge **14***a* and upturned terminal edge **14***b*, the application of a bending moment at the edge of the screen which urges the edge upwardly and the portion of the screen inwardly therefrom downwardly. This bending moment tends to further urge the center portion of the screen downwardly in firm contact with the supports **27**, thereby maintaining the screen substantially flat and in firm contact with the screen support bumpers **28** at all times and under all conditions of tautness.

It will be understood that while the screen **16** illustrated in the drawings is of heavy gauge metal and accordingly the upturned portions **29** and **30** are sufficiently rigid to resist deformation during clamping, the present invention may also be applied to lightweight, fine, screens. In such instances the upturned ends **29** and **30** may be reinforced by a sheet metal envelope extending substantially parallel to the members **16** and **17** and taking the general configuration of the outside peripheral edge of the screen. Such a sheet metal reinforcement may, if desired, be welded to the screen and extended along only one surface thereof, or, alternatively, may extend around the outside of the screen and be folded backwardly over the ends **30** to sandwich the upturned portions **29**, **30** between a folded-over reinforcing sheet metal channel. As an additional method of construction, a longitudinally extending bar having an inwardly turned attachment lip or the like may be welded to the peripheral edge of the screen **16** thereby serving the purpose of, and substituting for, the integral upturned portions **29**, **30**.

The above clamping action is very beneficial and is substantially contrary to the ordinary practice in which no peripherally upwardly acting bending moment giving

a downward force in the middle of the screen is applied to the screen. In the absence of such a peripheral bending moment, forces applied horizontally outwardly to upturned screen ends cause a reverse bending moment to be applied. Such a reverse bending moment actually urges the center of the screen upwardly as the clamping action is increased, thereby providing a tendency for the screen to separate from the supports **27**. Such separation causes instability in the screen surface causing premature failure and poor screening.

It will, therefore, clearly appear that I have provided a greatly improved clamping device for screens or the like wherein the clamping action provides a peripheral bending moment tending to urge the center of the screen downwardly against the screen supports. Since it will be understood that variations and modifications can be made relative to the above structure without departing from the novel concepts of the present invention, it is intended that the scope of the invention be limited solely by the appended claims.

I claim as my invention:

1. Screen tightening apparatus for positioning a screen in a plane comprising in combination, a peripheral support frame surrounding said screen, a plurality of screen supports attached to said frame and having one surface thereof positioned in said plane for supporting said screen at a plurality of points, first means associated with said frame for attachment to the peripheral edge of said screen, second means for drawing said first means upwardly and outwardly toward said frame, third means for contact with said screen on the opposite side thereof from said support and inwardly from the peripheral edge of said screen for urging the central body of said screen downwardly securely against said supports when said second means is drawn toward said frame, and fourth means positioned substantially under said third means on the side of said screen opposite from said third means for contact with said screen whereby drawing said second means toward said frame clamps said screen tightly against said fourth means at a point inwardly of the peripheral edge of the screen.

2. Screen tightening apparatus for positioning a screen in a plane comprising in combination, a peripheral support frame surrounding said screen, a plurality of screen supports attached to said frame and having one surface thereof positioned in said plane for supporting said screen at a plurality of centrally located points, a first means associated with said frame for attachment to the peripheral edge of said screen, second means for drawing said first means upwardly and outwardly toward said frame, third means for contact with said screen on the opposite side thereof from said support and inwardly from the point of attachment of said first means for urging the central body of said screen downwardly securely against said supports when said second means is drawn toward said frame, and fourth means positioned substantially under said third means on the side of said screen opposite from said third means for contact with said screen whereby drawing said second means toward said frame clamps said screen tightly against said fourth means at a point inwardly of the peripheral edge of the screen, said first means comprising an upwardly and outwardly turned edge secured to a clamping channel secured to said frame by said second means only and carrying said third means.

References Cited in the file of this patent

UNITED STATES PATENTS

1,397,342	Sturtevant	Nov. 15, 1921
2,183,991	Hasman	Dec. 19, 1939
2,345,947	Parks	Apr. 4, 1944
2,630,225	Bye	Mar. 3, 1953