Dec. 27, 1938. A. G. BRANDT 2,141,162

PHOTOGRAPHIC PRINT WASHER

Filed June 10, 1937 2 Sheets-Sheet 1

Fig. 1

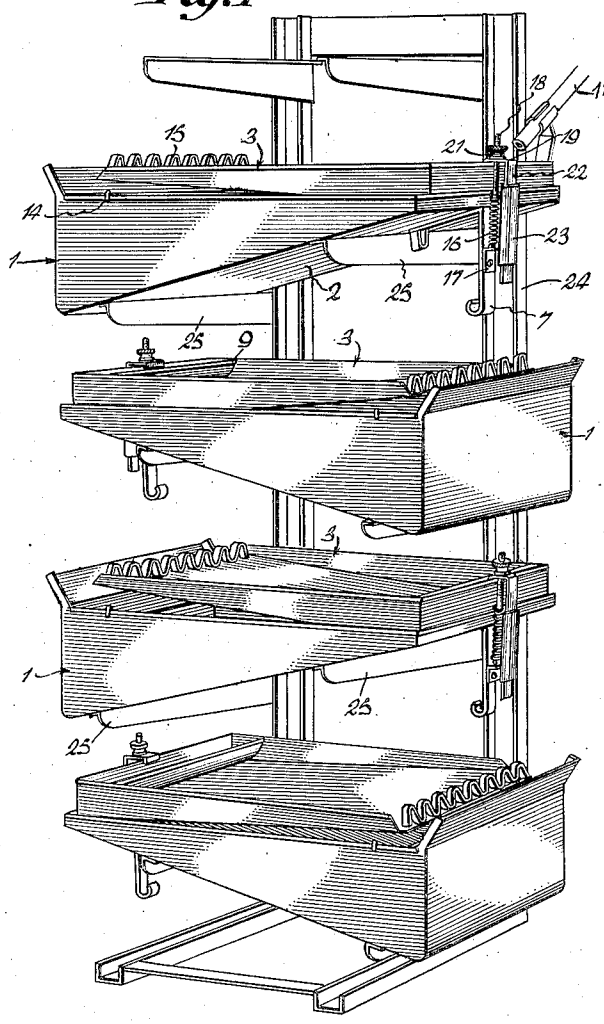

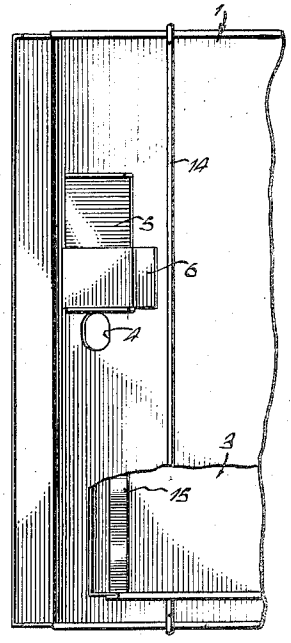

Fig. 5

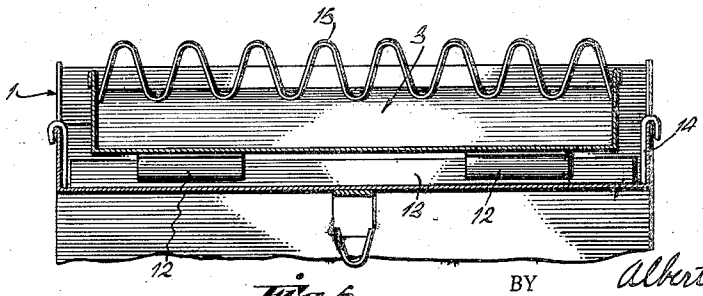

Fig. 6

INVENTOR.

BY Albert G. Brandt

Wood & Wood ATTORNEYS.

Dec. 27, 1938. A. G. BRANDT 2,141,162

PHOTOGRAPHIC PRINT WASHER

Filed June 10, 1937 2 Sheets-Sheet 2

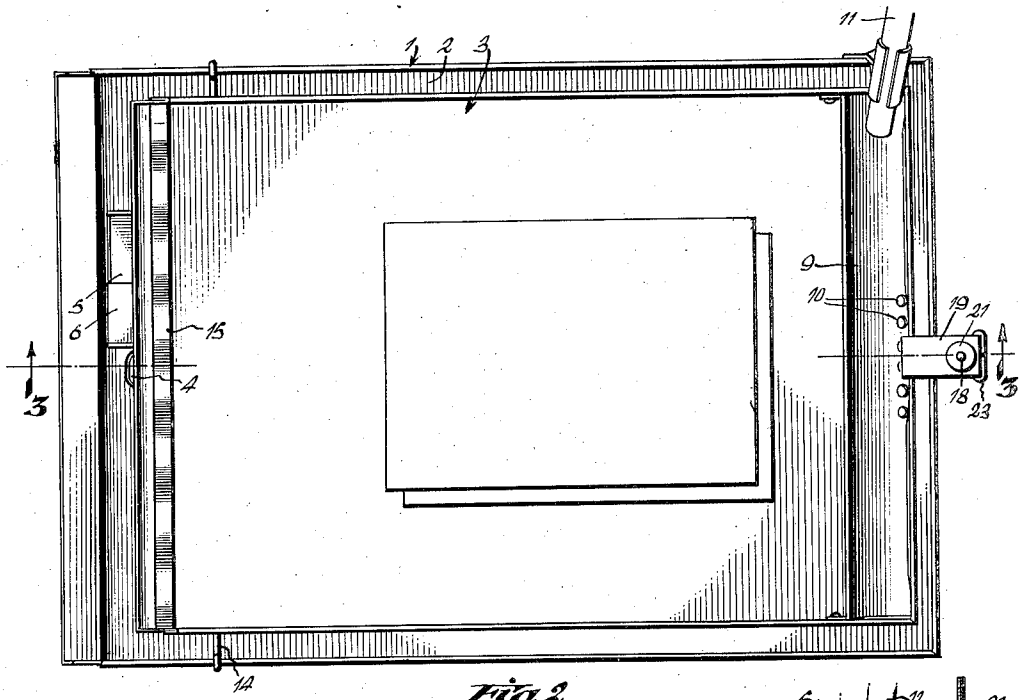

Fig. 2

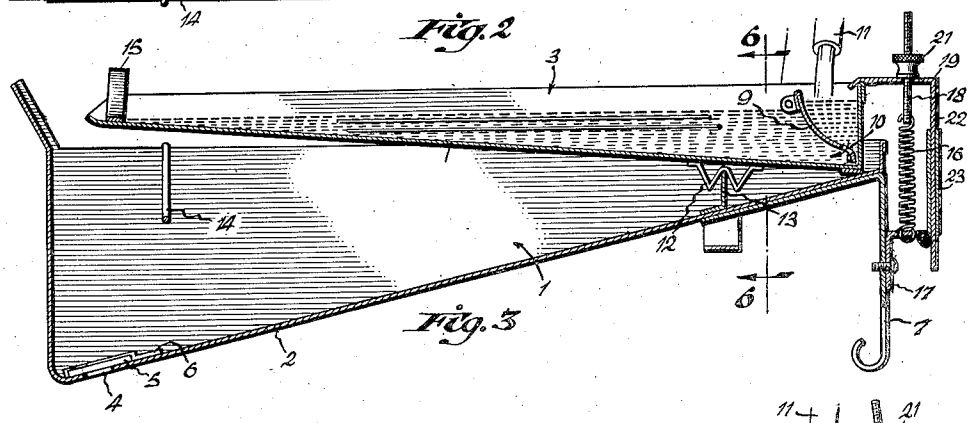

Fig. 3

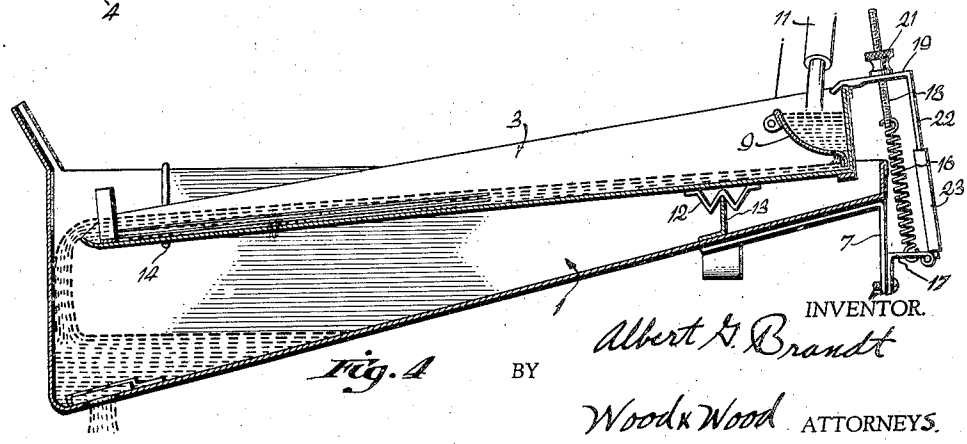

Fig. 4

INVENTOR.

Albert G. Brandt

BY

Wood & Wood ATTORNEYS.

Patented Dec. 27, 1938

2,141,162

UNITED STATES PATENT OFFICE

2,141,162

PHOTOGRAPHIC PRINT WASHER

Albert G. Brandt, Cincinnati, Ohio

Application June 10, 1937, Serial No. 147,529

7 Claims. (Cl. 95—99)

This invention relates to improvements in appliances for washing photographic prints, plates, or the like, and constitutes a pan having a tray tiltable therein for discharging the washing liquid from the tray into the pan.

An object of the invention is to provide a tray for washing photographic prints or for bath treating sheet-like materials, having a mounting adapting the tray to be tilted by an overbalancing supply of water or liquid for a rapid flowing discharge of the water over the sheets, and for agitation or reciprocation of the same, and for periodic automatic control when the liquid is taken from a continuous service.

Another object of the invention is to provide a washer for photographic prints and the like, comprising a pan having a liquid draining outlet at one end, and a tiltable tray within the pan for receiving the prints and liquid and discharging the liquid into the pan for supplying the tray of a second washer stationed beneath the first, and accordingly for servicing a battery of washers.

Another object of the invention is to provide a tray for washing photographic prints and the like with a sloping bottom, holding an abundant supply of washing liquid at one end of the tray for flushing the photographic prints in tilting the tray to discharge the liquid from the shallow end thereof.

Other objects and further advantages will be more fully set forth in a description of the accompanying drawings, in which:

Figure 1 is a perspective view of a tier of washer or rinsing units for photographic sheets or plates, or the like, removably supported upon a rack for draining the wash water or liquid from one tray downwardly into another therebeneath for the number of trays employed, and for interchanging the positions of the trays.

Figure 2 is an enlarged top plan view of a unit consisting of a pan and tiltable tray within the pan.

Figure 3 is a section on line 3—3, Figure 2.

Figure 4 is a section similar to Figure 3, showing the tray in a tilted position for abruptly discharging the water or liquid from the tray into the pan.

Figure 5 is a top plan view of one of the pans and a portion of the tray.

Figure 6 is a section on line 6—6, Figure 3.

As the primary use for the unit is for developing, washing, or rinsing photographic sheets or plates, the invention therefore will be principally described for such use.

The units can be used separately or in battery, as in a tier one above the other, the water being supplied to the uppermost unit of the series, draining therefrom into a second and correspondingly one to another for the number employed. As illustrated, the pans are removably supported upon a rack to permit each to be interchanged as a unit, or the trays thereof may be interchanged from one unit to another, or removed.

Referring to the drawings, 1 indicates a pan, varying in depth from one end to the other, produced by an inclined or angular bottom 2 for establishing a well at one end of the pan for collecting or accumulating a head supply of water, and also to accommodate for tilting the tray 3, hingedly and removably mounted within the pan. The bottom of the pan, at the well end, is provided with an outlet or aperture 4, preferably located centrally of the width of the pan for draining or discharging the water therefrom, or, as illustrated in Figure 1, for delivering the water supply to a second unit therebeneath, effecting a conservation of water, and for operating a plurality of units simultaneously supplied from a single source. The opening or aperture 4 is sealed or closed by a valve plate 5, sidably mounted upon the bottom of the pan by a clasp 6 fixed to the bottom of the pan. The valve plate at its opposite end is flanged to prevent its displacement, and also provides for a finger hold to shift the plate.

The pan, at the shallow end, is sustained in a serviceable position upon a flat support by a leg 7, extending centrally from the bottom. The leg, however, is not required when the pans are supported within a rack, as shown in Figure 1.

The tray 3, for washing or rinsing the plates, is removably and hingedly supported within the pan, and, similarly to the pan, has an inclined bottom, preferably in a reverse order to the bottom of the pan so that the deep end of the tray is at the shallow end of the pan. The shallow or discharge end of the tray is open and the bottom flares slightly upwardly to provide for a slight vessel depth and a trap against a complete discharge of the liquid or water when the tray is tilted. Tilting is effected automatically as the weight of the water supplied into the tray overbalances the tray at one side of its pivot or fulcrum.

A trough is provided within the forward end of the tray by a partition wall or baffle 9, having a plurality of openings or apertures 10 at its lower edge. The wash water is supplied to the trough from any suitable source, as by a hose 11, extending from a water service line, or from a discharge

from one pan into another when several units are arranged in a tier or battery. The water in the trough drains through the apertures 10, permeating into the vessel portion of the tray below the floating level or plane of the prints deposited therein.

The water is delivered into the tray without splashing, against the forward edges of the prints, causing a sufficient separation of the sheets to allow the water to pass continuously therebetween for dissolving and carrying off the chemical matter contained on the sheets, which it is desired to wash off. When the tray has received a supply of water sufficient to over-balance the same at one side of the pivot, the tray will tilt for a rapid discharge of the water.

The trough provides for a reserve or head supply of water for distribution into the vessel portion of the tray under a sufficient flow for a uniform treatment of the surfaces of the sheets, and for a removal of the chemical matter to be washed out, without causing any wrinkling of the sheets. The sheets always lie flat so that injury thereto is avoided.

The tray, toward its forward end and at the lower side of the bottom for hingedly and removably connecting the same within the pan, is provided with a pair of spaced lugs 12—12. The lugs are preferably formed of sheet metal, bent or corrugated to form a V-channel for seating over the edge of a blade 13, fixed to and projecting upwardly from the bottom of the pan and extended crosswise thereof.

The tilting of the tray is limited by a stop bar 14, in the form of a wire rod bent into U-shape, with the ends of angle limbs each terminating in a hook, bent for engagement over the upper edge of a side wall of the pan. The construction permits the stop rod to be adjusted along the walls of the pan for varying or regulating the tilting drop of the tray. The hook ends provide a frictional grip with the walls of the pan securely holding the rod in its adjusted position.

The discharge end of the tray is provided with a guard or grid 15, formed of a corrugated strip rigidly fixed in place, which prevents dispatching the sheets when the tray is dumped or tilted. When the tray is dumped the sheets move toward the discharge end and are arrested upon striking against the stop guard while the water is discharged, after which the tray returns to its normal position.

The upwardly flared end of the tray bottom traps some of the water which flows back to the deep end of the tray as the tray swings to its erected position, carrying the sheets therewith. The to and fro movement of the sheets, induced by the rocking of the tray upon discharging the water, agitates the sheets sufficiently to prevent them from adhering together, and is also of material advantage in washing off the chemical matter. The tray holds only a comparatively small amount of water; therefore the periodicity of tilting is frequent and the timing can be regulated by varying the load at the water supply end of the tray, or sustained against tilting. In the present instance this is accomplished by a spring 16, having one end connected to a rigid support, as the bracket 17 fixed to the leg, and the opposite end to a set screw 18 carried by a hook 19, engageable over the forward end wall of the tray. The set screws traverses a slot in the hook 19 and carries a nut 21, screw-threaded thereon and bearing against the upper face of the hook, by which the tension of the spring can be adjusted.

The hook 19 is provided with a shank 22, slidably engaged within a sleeve 23, hingedly connected to the bracket 17. The shank and sleeve provide an extensible, hingedly mounted clasp for removably connecting the spring to the water charging end of the tray, and also provide a sustaining structure for the spring, particularly when disengaged from the tray. The clasp, when released, swings to an outwardly inclined position from the leg 7 of the pan for convenient grasp by the operator.

The spring supporting structure stabilizes the tray upon its fulcrum and centralizes the point of spring connection with the tray so that a connection can be quickly and conveniently made without disturbing the determined regulation of the spring tension. Upon adjusting the spring to apply an excessive tension, the tray can be held against tilting and the surplus water, if the supply is continued, will drain over the flared end of the tray.

In Figure 1 a plurality of units is illustrated, arranged in a tier one above the other. Each unit is removably supported on a rack, comprising a pedestal 24 of any suitable construction, having bracket arms 25 laterally projected therefrom and arranged in pairs, with the arms of each pair relatively at different elevations appropriate to the inclination of the bottom of the pan for resting a unit in a normal position, with its top edge and that of the tray in a level plane.

The units are relatively alternately or reversely disposed so that the water from the well ends of the pans will discharge and drain into the trough of a tray of a second unit therebeneath. The water supplied to the uppermost unit of the series drains from one unit to another, for the number of units included in an assembly, following a zigzag course. The flow is approximately continuous, and as each tray discharges the chemical laden water the supply of water is quickly dumped into the supply trough of a tray therebeneath, which drains out of the trough in about the period that it would receive a second charge. In this manner the washing or rinsing can be accomplished in less time and with less water. The washing is more efficiently accomplished as there is a change of water each time a tray dumps, and as the washing proceeds the trays can be transposed or interchanged and the lower units consecutively moved up with the washing of the prints finished as they respectively reach the uppermost position of the series, whereupon they are removed, a new load is added, and the tray or unit placed in the lowermost position. This assures a full and uniform washing of all prints.

The deep end of the tray provides for an abundant supply of water which will flush the prints upon tilting the tray, materially assisting in reducing the time of washing and in uniformly washing off the chemicals from the prints. The time that the tray is in its erected position may be designated as a soaking period for dissolving the chemicals to be washed out, and upon dumping the tray the charge of water is affluently passed over the prints to carry off the dissolved chemicals.

Having described my invention, I claim:

1. An appliance of the nature disclosed for washing photographic prints and the like comprising, a pan, a tray pivotally mounted within the pan and adapted to receive an overbalancing liquid supply for tilting the tray and discharging the liquid into the pan, a trough at the head end of the tray for receiving a liquid supply and aper-

tured for draining the liquid into the tray beneath the prints deposited therein, and a guard across the discharge end of the tray for withholding dispatch of the prints when tilting the tray to discharge the liquid.

2. An appliance of the nature disclosed, comprising, a pan, a tray pivotally mounted within the pan, having a sloping bottom to provide a shallow discharge end and adapted to receive an overbalancing liquid supply for tilting the tray and discharging the liquid from the shallow end into the pan, a trough at the deep end of the tray for receiving the liquid supply and apertured for draining the liquid into the tray beneath the prints deposited therein, and a guard across the discharge end of the tray for withholding dispatch of the non-liquid contents when tilting the tray to discharge the liquid.

3. An appliance of the nature disclosed, comprising, a pan having a sloping bottom for draining liquid to one end and therefrom from apertures in the pan, and a tray within the pan having a bottom sloping conversely to the bottom of the pan, the tray pivoted for tilting when filled to an overbalancing supply to discharge the liquid therein from its shallow end into the pan.

4. An appliance of the nature disclosed, comprising, a pan having a sloping bottom for draining liquid to one end and therefrom from apertures in the pan, and a tray pivotally supported within the pan having a sloping bottom to provide a shallow end from which the liquid is discharged, the tray disposed within the pan with its shallow end alternate to the shallow end of the tray with the deep end thereof bearing upon the bottom of the tray to sustain the same, and adapted to tilt when filled to an overbalancing supply of liquid to discharge into the pan.

5. A tray for washing prints and the like, having a sloping bottom providing a shallow discharge end and a deep opposite end, and a trough across the deep end of the tray having apertures in its bottom portion for draining into the tray below the plane of the prints immersed in the liquid of the tray.

6. In a washer for photographic prints and the like, comprising, a pan, a tray removably pivotally supported within the pan for tilting the tray to discharge the liquid contents from one end thereof, and an extensible spring-tensioned structure at one end, hingedly mounted upon the pan and its opposite end removably connecting with the tray for sustaining the tray in its erected position.

7. In an appliance for washing photographic prints and the like, comprising a plurality of pans disposed in a tier one above the other, each pan having a tray pivotally mounted therein for tilting to discharge the liquid contents into the pan, each of the pans at one end having apertures in its bottom for draining into the tray of the pan therebeneath, whereby the wash liquid fed into the uppermost unit serves for the units therebeneath.

ALBERT G. BRANDT.