United States Patent [191

Boom et al.

[11] **3,880,244**

[45] **Apr. 29, 1975**

[54] **TELESCOPIC ROCK DRILL FEED**

[75] Inventors: **Clarence O. Boom**, Littleton; **Laurence B. Hanson**, Pine, both of Colo.

[73] Assignee: **Gardner-Denver Company**, Quincy, Ill.

[22] Filed: **Feb. 4, 1974**

[21] Appl. No.: **439,516**

Related U.S. Application Data

[62] Division of Ser. No. 315,055, Dec. 14, 1972, Pat. No. 3,807,510.

[52] **U.S. Cl.** **173/19**; 74/841; 408/11

[51] **Int. Cl.** **E21c 5/02**

[58] **Field of Search** 173/19, 21, 147, 160; 408/10, 11, 12; 74/841

[56] **References Cited**

UNITED STATES PATENTS

1,838,459	12/1931	Smith et al.	173/19
2,726,065	12/1955	Feucht	173/147
3,576,217	4/1971	Schaedler	173/19

Primary Examiner—Ernest R. Purser
Attorney, Agent, or Firm—M. E. Martin

[57] **ABSTRACT**

A rock drill feed mechanism in which a drill motor is reversibly driven along a guideway by a rotatable power screw. The guideway is slidably mounted on an elongated support for reversible movement therealong by a second power screw mounted on the guideway. The power screws are driven independently by fluid motors and may be selectively controlled to operate the feed mechanism in a telescoped condition for movement of the drill motor alone or movement of the drill motor and the guideway to extend the useful feed length. A control circuit includes sensing devices for determining when the feed mechanism is fully telescoped or fully extended for reversing and shutting off the drill motor, respectively.

5 Claims, 7 Drawing Figures

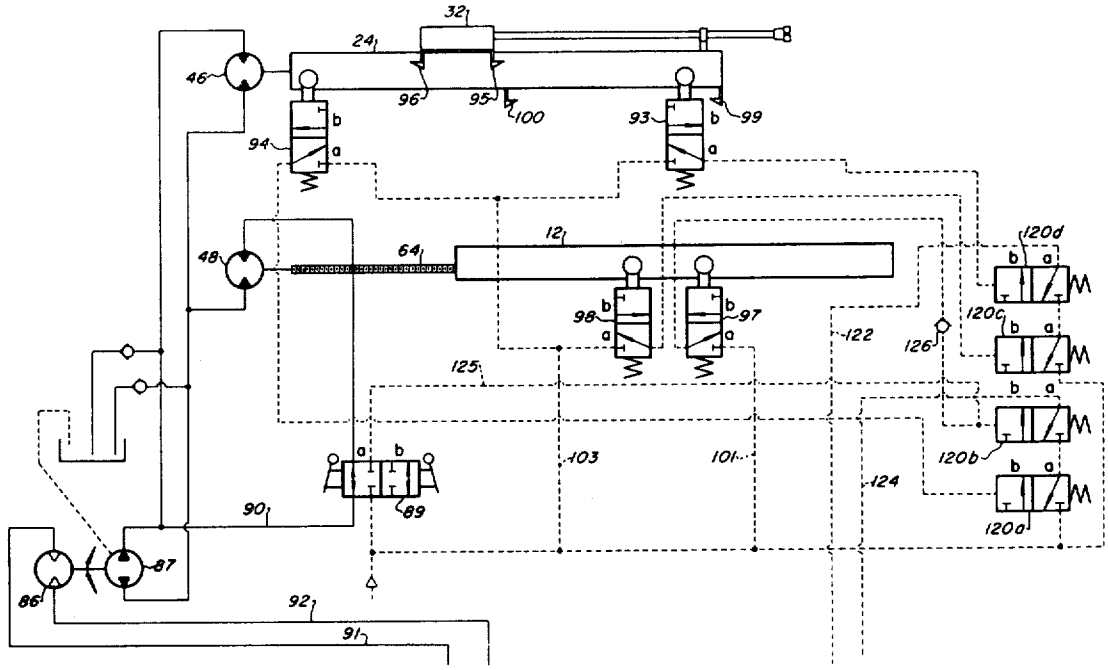

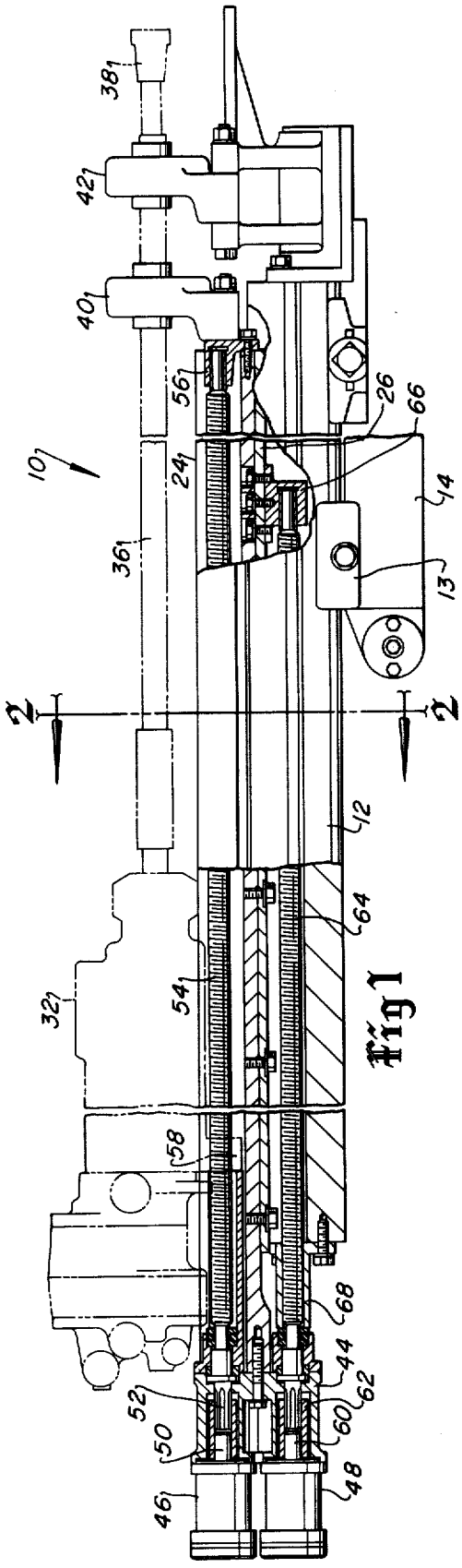

Fig 1

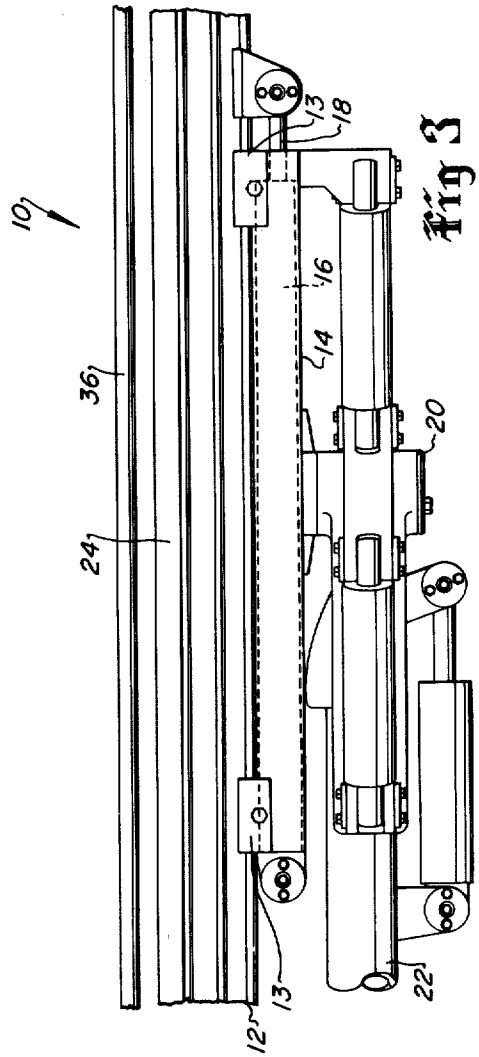

Fig 3

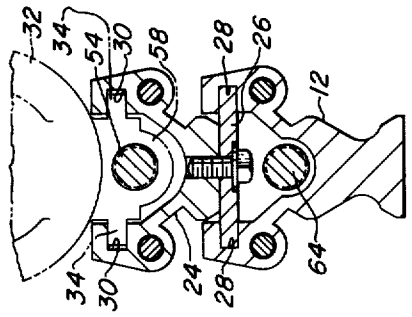

Fig 2

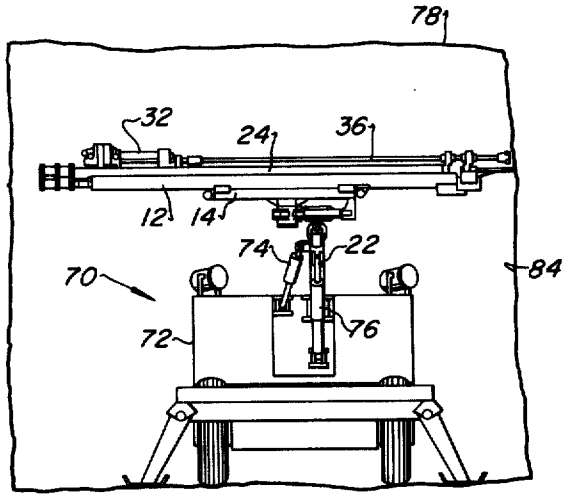
78
32
24
36
12
14
74
22
70
84
72
76

Fig 4

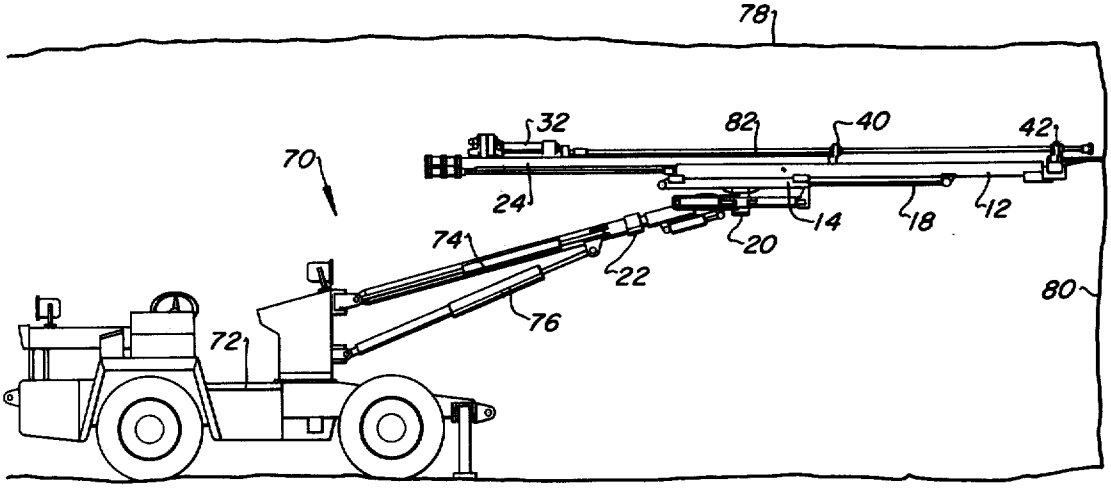
78
32
82
40
42
70
24
14
18
12
74
20
22
80
72
76

Fig 5

Fig 6

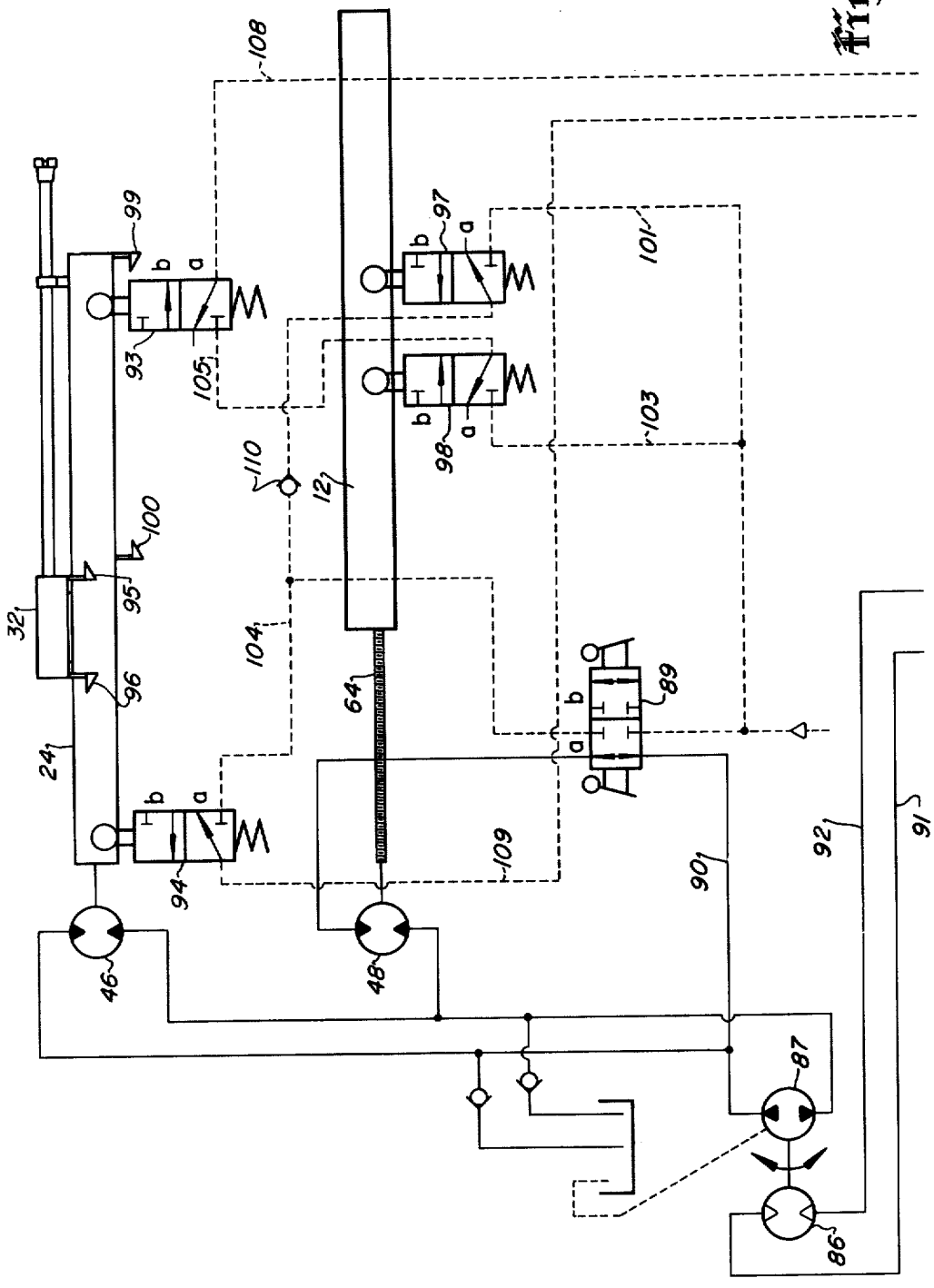
108
99
b
a
93
105
97
101
98
103
110
12
100
95
96
32
104
64
89
24
94
109
90
92
91
46
48
87
86

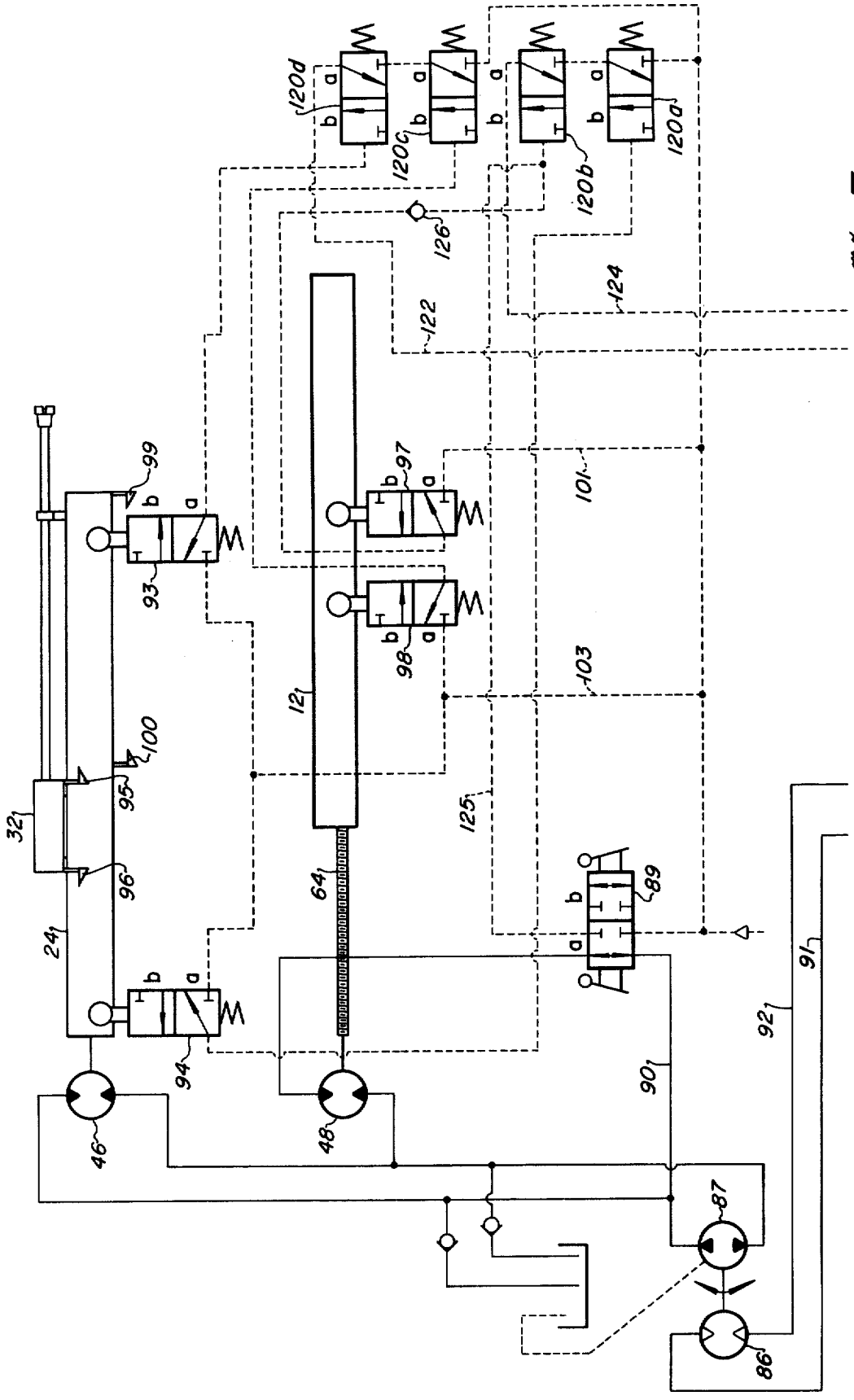
120d
120c
120b
120a
126
122
124
101
103
125
99
93
97
98
12
100
95
96
32
24
64
89
94
46
48
90
92
91
87
86

Fig 7

TELESCOPIC ROCK DRILL FEED

This is a division of application Ser. No. 315,055 filed Dec. 14, 1972 and now U.S. Pat. No. 3,807,510.

BACKGROUND OF THE INVENTION

Elongated supports or guideways on which a rock drill motor is reversibly moved therealong by a power screw are well known and advantageously used in underground drilling because of their relative light weight and ease of mounting on movable booms. In many tunneling operations it is desirable to provide a drill feed mechanism which will permit drilling relatively long holes in one pass of the drill along the feed support which support may also be telescoped or reduced in length to provide for drilling where space limitations in the tunnel will allow only comparatively short feed mechanisms to be positioned. Various arrangements of telescopic fluid cylinder and piston feed devices have been used to meet the requirements of the abovementioned operating conditions without providing the advantages of light weight and reliability enjoyed by power screw type feed mechanisms.

SUMMARY OF THE INVENTION

The present invention provides a telescopic feed mechanism for rock drills which may be extended to provide a relatively long feed length where working conditions permit and which may be telescoped to reduce the length of the feed mechanism for operation in restricted work spaces.

The present invention also provides a telescopic feed mechanism for rock drills which is of the lightweight power screw type which may be mounted on the distal end of a movable boom structure for maneuvering into positions where space limitations require the use of the feed mechanism in the telescoped condition.

The present invention further provides a telescopic feed mechanism in which dual power screws are driven independently by fluid motors which may be selectively operated to feed a drill motor along a guideway or to feed both a drill motor along a guideway while feeding the guideway along a support member. Moreover, the present invention contemplates a control circuit including position sensors operative to provide a signal when the drill motor and guideway have been fed forward or retracted to the limits of the feed mechanism.

BRIEF DESCRIPTION OF THE DRAWINGS

FIG. 1 is a longitudinal elevation partially sectioned of a telescopic feed mechanism in accordance with the present invention;

FIG. 2 is a transverse section taken along lines 2—2 of FIG. 1;

FIG. 3 is a partial longitudinal elevation of the feed mechanism of FIG. 1;

FIG. 4 is a transverse elevation of a mobile rock drill unit upon which the telescopic feed mechanism of FIG. 1 is mounted for operation in the telescoped condition;

FIG. 5 is a longitudinal elevation of the mobile rock drill unit shown in FIG. 4 with the telescopic feed shown in the extended position;

FIG. 6 is a schematic diagram of a control circuit for the telescopic feed mechanism of the present invention; and,

FIG. 7 is a schematic diagram of an alternate embodiment of a control circuit for the telescopic feed mechanism of the present invention.

DESCRIPTION OF THE PREFERRED EMBODIMENT

Referring to FIGS. 1 through 3 the feed mechanism of the present invention is generally designated by the numeral 10 and includes an elongated support 12 adapted to be slidably retained by guides 13 which are mounted on a feed support 14. The feed support 14 is of a type which includes a pressure fluid cylinder and piston assembly 16 having the distal end of a piston rod 18 connected to the support 12 for moving the feed mechanism 10 with respect to the support 14 as shown by the positions of the feed mechanism in FIGS. 4 and 5. The feed support 14 is pivotally mounted on a positioner device 20 which in turn is mounted on the distal end of a movable boom 22, FIG. 3.

The support 12 is adapted to slidably mount a drill guideway 24. The guideway 24 includes an elongated platelike member 26 fastened thereto which is slidably retained in opposed grooves 28 extending longitudinally in the support 12. The guideway 24 also includes a pair of longitudinal grooves 30 adapted to slidably support a fluid operated rock drill motor 32 which includes laterally projecting gibs 34 disposed in the grooves 30. The drill motor 32 is adapted to transmit percussive energy and rotary motion to an elongated drill rod 36 having a bit portion 38 disposed on the rod end. The drill rod 36 is guided by suitable supporting devices 40 and 42 commonly known as centralizers. The centralizer 40 is mounted on the guideway 24 and the centralizer 42 is suitably mounted on the support 12. The centralizers 40 and 42 are desirably of the well known hinged jaw type which permit lateral insertion of drill rods into the centralizer support jaws.

As shown in FIG. 1 the end of the guideway 24 opposite the end to which the centralizer 40 is attached is provided with a bracket 44 upon which pressure fluid operated rotary motors 46 and 48 are mounted adjacent each other. The rotary motor 46 is of the reversible type and includes a shaft 50 which is connected by a coupling 52 to an elongated member comprising a power screw 54. The power screw 54 is disposed between the grooves 30 and is rotatably supported by a bearing support 56 which also supports the centralizer 40 on the guideway 24. The power screw 54 is engaged with a nut 58 disposed on the drill motor 32. In response to rotation of the motor 46 the power screw 54 is operable to feed the drill motor reversibly along the guideway 24 in a manner well known.

The motor 48 is reversible and also includes a shaft 60 which is connected by a coupling 62 to a second elongated member comprising a power screw 64 disposed adjacent and parallel to the power screw 54. The power screw 64 is also rotatably supported on the guideway 24 by a suitable bearing support 66 mounted on the member 26. The power screw 64 is threadedly engaged with a cooperating nut 68 nonrotatably mounted on the end of the support 12 opposite the end at which the centralizer 42 is mounted. In response to rotation of the motor 48 the power screw 64 is operable to feed the guideway 24 reversibly along the support 12 to extend or reduce the overall effective feed length of the feed mechanism 10. With the arrangement of the support 12 and guideway 24 of the present invention the centralizer 40 may be used to provide intermediate support for relatively long drill rods which may be used when the feed mechanism is operated to feed the drill

motor from the fully extended position of the guideway **24** with respect to the support **12.** Moreover, the location of the power screw **64** under the guideway **24** provides for some protection from falling rock and dust.

The feed mechanism **10** is advantageously used in combination with mobile drill rigs such as the rig **70** illustrated in FIGS. **4** and **5.** The drill rig **70** includes a wheeled undercarriage **72** upon which is pivotally mounted the boom **22** adapted to be supported and moved by pressure fluid cylinder actuators **74** and **76.** The rig **70** is illustrated as being disposed in an underground tunnel **78.** In the position of the rig shown in FIG. **5** the feed mechanism **10** is positioned for drilling the longitudinal end face **80** of the tunnel and adequate space is available to allow the guideway **24** to be extended with respect to the support **12.** The drill motor **32** is initially positioned at the rearward end of the guideway **24** to provide for using a relatively long drill rod **82.** Accordingly, the effective feed length of the feed mechanism **10** is increased and relatively long holes may be drilled, without the addition of drill rod sections, in a single pass of the drill motor **32** along the guideway **24** and of the guideway **24** along the support **12.** In a preferred mode of operation the motors **46** and **48** are simultaneously supplied with pressure fluid from a single source to provide for feeding the drill motor along the guideway **24** and for telescoping the guideway **24** to the position shown in FIG. **1.** As previously mentioned, the motors **46** and **48** are reversible and may be simultaneously operated to retract the drill motor **32** along the guideway **24** and extend the guideway **24** to the position shown in FIG. **5.**

The feed mechanism **10** may also be advantageously used to provide for drilling holes where space limitations require a shorter feed length than is provided by the feed mechanism in the condition shown in FIG. **5.** Referring to FIG. **4** the feed mechanism **10** is shown positioned for drilling holes in the sidewall **84** of the tunnel **78.** The tunnel **78** is of insufficient width to accommodate the feed mechanism in the extended condition. Accordingly, prior to positioning the feed mechanism **10** for drilling the sidewall **84** the drill rod **82** is replaced by a shorter drill rod **36** and the motor **48** is operated to telescope the guideway **24** into a retracted position with respect to the guideway **12.** The motor **48** is then rendered inoperable or locked by suitable operating controls, as will be explained further herein, and the motor **46** is operated to feed the drill motor reversibly along the guideway **24.**

Referring to FIG. **6,** the feed mechanism **10** of the present invention is advantageously operated in combination with a control circuit partly shown in schematic form. The control circuit illustrated in FIG. **6** is intended to be used in conjunction with a major portion of the control system for rock drills disclosed in U.S. Pat. No. 3,561,542 to L. B. Hanson et al. Reference to specific portions of the control system of the above mentioned patent will be made in the description of the control circuit and operation thereof shown in FIG. **6** and said patent will hereinafter be referred to as the '542 patent.

The control system for the telescopic feed mechanism **10** includes a reversible pressure fluid motor **86** connected to a reversible fluid pump **87** preferably operating on hydraulic fluid. The pump **87** is connected to the motors **46** and **48** in a closed circuit arrangement whereby the motors may operate independently if one or the other is stalled, or operate simultaneously whereby a feeding force on the drill may be provided by either motor or both motors simultaneously. The total feed force would be the same regardless of the condition of operation. A two-position manually operated control valve **89** is interposed in a conduit **90** leading to the motor **48.** The valve **89** is operable to be positioned to provide for fluid flow to the motor **48** or to prevent fluid flow to the motor from the pump **87.** In this way the motor **48** may be controlled to be inoperative when it is desired to operate the feed mechanism in the position shown in FIG. **4** under conditions in which the guideway **24** is not to be moved with respect to the guideway **12.** The motor **86** may receive pressure fluid from a suitable source for reversible operation and desirably can be provided with pressure fluid at a regulated pressure from the control system of the '542 patent by connecting conduits **91** and **92** leading to the motor with the conduits designated **120** and **130** shown in FIG. **1** of the '542 patent. The motors **46** and **48** would then be operable at a regulated fluid pressure derived from the pump **87** which in turn would be controlled by the motor **86.** The motor **86** would be operative to receive pressure fluid from the control system of the '542 patent in place of the rock drill feed motor disclosed therein.

The feed mechanism **10** also may be provided with a position sensing circuit as shown in FIG. **6** whereby a pressure fluid signal may be generated when the drill motor **32** has been fed forwardly as far as the feed mechanism can provide. The sensing circuit of FIG. **6** also provides for a pressure fluid signal to be generated when the drill motor has been retracted along the guideway **24** to the starting position and the guideway **24** has been extended with espect to the guideway **12.** If the feed mechanism **10** is being operated with the guideway **24** telescoped and inoperative the sensing circuit can be controlled by the valve **89** to provide a signal when the drill has been returned to the starting position on the guideway **24.**

The guideway **24** is provided with sensing means comprising the three-way, two-position valves **93** and **94** disposed on the guideway **24.** The valves **93** and **94** are spring biased to be in position *a* and are mechanically actuated by suitable projections **95** and **96** on the drill motor **32** to be respectively actuated to position *b.* The support **12** is provided with sensing means in the form of similar two-position valves **97** and **98** which are positioned on the support **12** so that they may be actuated to their positions *b* by respective projections **99** and **100** on the guideway **24.** Pressure fluid such as compressed air is supplied to the sensing valves **97** and **98** from a suitable source by way of conduits **101** and **103.** Sensing valve **97** is connected in series to sensing valve **94** by conduit **104** and sensing valve **98** is connected in series to sensing valve **93** by conduit **105.** Accordingly, when the motors **46** and **48** have advanced the drill motor **32** so that projection **95** actuates valve **93** to position *b* and the guideway **24** has been telescoped along the support **12** so that projection **100** actuates valve **98** to position *b* a pressure fluid signal is produced in conduit **108.** This signal may be used to indicate that the drill motor has been fed forwardly in drilling to a forward limit position of the useful feed length of the feed mechanism **10.** Moreover, the signal generated in conduit **108** may be transmitted to the conduit designated with numeral **134** in the drawings of

the '542 patent to effect automatic reversal of the motor **86** and accordingly the motors **46** and **48** in accordance with the description of operation of the rock drill control systems disclosed in the '542 patent.

The sensing valves **97** and **94**, when both actuated to their positions b by extension of the guideway **24** and return of the drill motor **32** to the position shown in FIGS. **1** and **5**, will provide a pressure signal in conduit **109** which can be used to indicate that the feed mechanism **10** is in the rearward limit position with respect to the drilling face. Furthermore, the conduit **109** can be connected to conduit designated with numeral **102** in the '542 patent so that a pressure signal generated in conduit **109** can be used to shut off the operation of the motor **86** and drill motor **32**. It is assumed that the drill motor, drill support and position sensing circuit portion shown in FIG. **1** of the '542 patent would be replaced by the feed mechanism **10** and control circuit of FIG. **6** of the instant disclosure.

The position sensing control of the present invention may be operated to reverse the feed direction and shut off the drill motor or indicate the need to do so when the feed mechanism **10** is operated in the telescoped condition as shown in FIG. **4**. For operation in the telescoped condition the valve **98** will be held in position b by the projection **100** due to the telescoped position of the guideway **24** with respect to the support **12**. Accordingly, when valve **93** is actuated by the drill motor **32** to position *b* a signal will be generated in conduit **108**. The manually actuated valve **89** is shifted to position *b* to render the motor **48** inoperable and to provide a supply of pressure air to conduit **104**. A check valve **110** prevents back-flow and escape of air through valve **97** which is in position *a*. With a supply of pressure air in conduit **104** a pressure air signal will be generated in conduit **109** when the projection **96** on the drill motor actuates valve **94** to position *b* thereby providing a signal that the drill motor has returned to the starting position on the guideway **24**. Accordingly, the telescoping feed mechanism **10** in combination with the position sensing control circuit provides an improved drilling system which may be adapted for automatic control of the drilling cycle if the feed mechanism is operated either in the extended or telescoped mode.

Referring to FIG. **7** an alternate embodiment of a position sensing control circuit for the feed mechanism **10** is shown in schematic form. The control circuit of FIG. **7** includes signal relay means comprising a plurality of two position valves **120***a*, **120***b*, **120***c*, and **120***d* which are spring biased in position *a* and are fluid actuated to position *b*. Valves **120***a* and **120***c* are connected to the same pressure fluid source as conduits **101** and **103**. Valves **120***b* and **120***d* are respectively series connected to valves **120***a* and **120***c*. A conduit **122** connected to valve **120***d* may be connected to conduit **102** of the control system of the '542 patent and a conduit **124** may be suitably connected to the conduit **134** of the '542 patent and to the valve **120***b* of FIG. **7**. As shown in FIG. **7** the fluid actuators of valves **120***a–d* are respectively in communication with valves **94**, **97**, **98**, and **93** and are each actuated to their position *b* when a pressure signal is received from the respective associated valve. Conduit **103** is connected to continuously supply pressure fluid to valves **93** and **94** as well as valve **98**. The pressure fluid actuator of valve **120***b* is connected via a conduit **125** to receive pressure fluid from valve **89** when the latter valve is manually shifted to position *b* for operation of the feed mechanism **10** in the telescoped position of the guideway **24** with respect to support **12**. A check valve **126** prevents leakage of pressure fluid through valve **97** from conduit **125**.

Accordingly, when valves **93** and **98** have been actuated to position *b*, valves **120***c* and **120***d* will be actuated to position *b* and a pressure signal will be generated in conduit **122** indicating that a forward limit position of the drill motor and guideway has been reached. In like manner when valves **94** and **97** have been actuated to position *b* valves **120***a* and **120***b* will be actuated to position *b* to provide a pressure fluid signal in conduit **124** indicating that the drill motor **32** and guideway **24** have both reached a rearward limit position.

What is claimed is:

1. In a telescopic rock drill feed mechanism:
an elongated support;
an elongated drill guideway mounted on said support for reversible movement therealong;
a drill motor mounted on said guideway for reversible movement therealong;
power means for moving said guideway along said support and said drill motor along said guideway between forward and rearward limit positions; and,
control means for reversing said power means, said control means including a first pressure fluid control circuit having sensing means disposed on said feed mechanism and including a valve disposed on said guideway to be actuated by said drill motor and a valve disposed on said elongated support to be actuated by said guideway, said valves being series connected one to the other for producing a pressure fluid signal to cause said power means to reverse the direction of movement of said drill motor and said guideway in response to said drill motor and said guideway both reaching their forward limit positions.

2. The invention set forth in claim **1** together with: a second control circuit including sensing valve means disposed on said feed mechanism and connected in such a way as to transmit a pressure fluid signal to said control means in response to said drill motor and said guideway both reaching their rearward limit positions.

3. The invention set forth in claim **2** wherein: said control circuit includes valve means actuatable to provide for said sensing valve means in said second control circuit to transmit a pressure fluid signal to said control means when said drill motor alone has reached its rearward limit position.

4. The invention set forth in claim **2** wherein:
said sensing valve means of said second control circuit includes a valve disposed on said guideway to be actuated by said drill motor and a valve disposed on said elongated support to be actuated by said guideway, said valves being series connected one to the other.

5. The invention set forth in claim **2** wherein:
said first and second control circuits each include signal relay means comprising fluid actuated valve means connected to said sensing valve means and responsive to receiving pressure fluid signals from said sensing valve means to transmit pressure fluid signals to said control means.

* * * * *