H. LAURENT.

NEEDLE FOR HYPODERMIC SYRINGES.

APPLICATION FILED NOV. 21, 1914.

1,180,051. Patented Apr. 18, 1916.

Fig. 1.

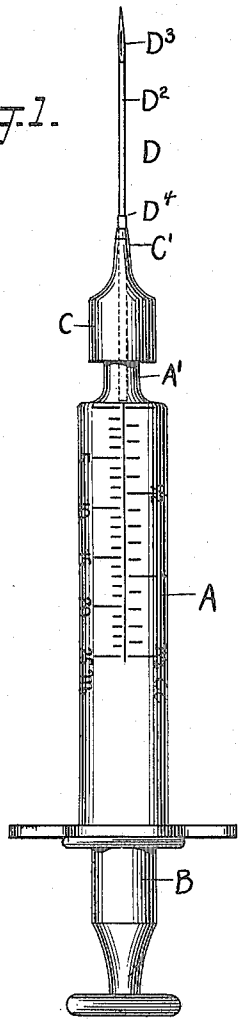

Fig. 4.

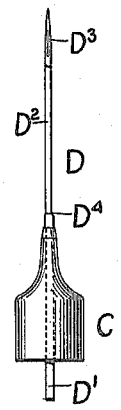

Fig. 2.

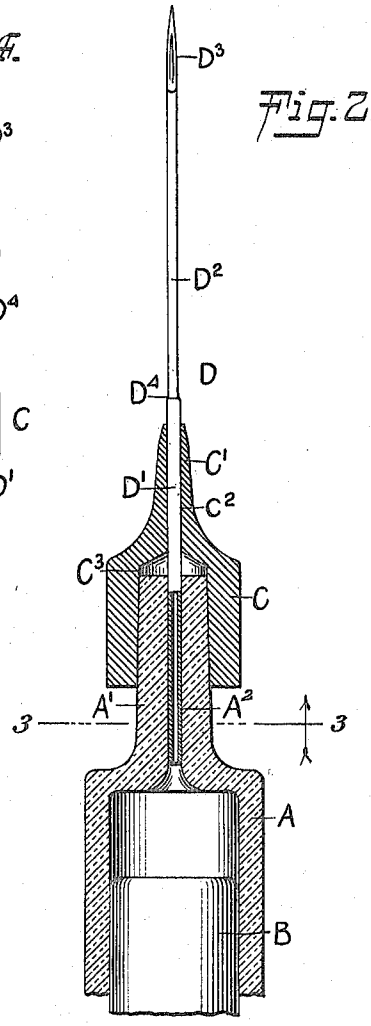

Fig. 3.

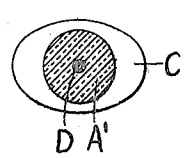

WITNESSES:

William P. Goebel.

Theo. G. Hoster.

INVENTOR

Henry Laurent

BY [signature]

ATTORNEYS

UNITED STATES PATENT OFFICE.

HENRY LAURENT, OF EAST RUTHERFORD, NEW JERSEY, ASSIGNOR TO BECTON, DICKINSON CO., OF RUTHERFORD, NEW JERSEY, A CORPORATION OF NEW JERSEY.

NEEDLE FOR HYPODERMIC SYRINGES.

1,180,051. Specification of Letters Patent. Patented Apr. 18, 1916.

Application filed November 21, 1914. Serial No. 873,305.

To all whom it may concern:

Be it known that I, HENRY LAURENT, a citizen of the United States, and a resident of East Rutherford, in the county of Bergen and State of New Jersey, have invented a new and Improved Needle for Hypodermic Syringes, of which the following is a full, clear, and exact description.

The object of the invention is to provide a new and improved needle for hypodermic syringes, arranged to provide an exceedingly strong and durable needle shank to prevent the needle shank from breaking off at the needle hub, to cause the fluid in the barrel of the syringe to flow directly into the needle and to allow of readily engaging the butt end of the needle shank with the bore in the outlet of the barrel when placing the hub exteriorly in position on the said outlet.

In order to accomplish the desired result, use is made of a hub and a hollow needle held therein, the pointed end portion of the needle being reduced relative to the butt end portion held in the hub and projecting beyond the outer end thereof to allow the needle shank to flex at a point spaced from the end of the hub.

A practical embodiment of the invention is represented in the accompanying drawings forming a part of this specification, in which similar characters of reference indicate corresponding parts in all the views.

Figure 1 is a plan view of a hypodermic syringe provided with the improved needle; Fig. 2 is an enlarged sectional plan view of the needle as applied to the outlet end of the barrel; Fig. 3 is a cross section of the same on the line 3—3 of Fig. 2; and Fig. 4 is a plan view of the needle and its hub detached from the barrel.

In the barrel A of the hypodermic syringe reciprocates in the usual manner the plunger B and the forward or outlet end A′ of the barrel is reduced for receiving the hub C carrying the hollow needle D. The needle D has its shank formed of a butt end portion D′ and a somewhat reduced pointed end portion D^2 terminating in the beveled point D^3. In practice, the needle described is formed from tubular stock of a diameter corresponding to that of the butt end portion D′, and this stock is reduced by swaging or other processes to form the pointed end portion D^2. By proceeding in the manner described, the joint or junction D^4 between the butt end portion D′ and the pointed end portion D^2 forms the flexing point for the shank of the needle, and this flexing point is located a short distance beyond the pointed end C′ of the hub C, as plainly indicated in Figs. 1, 2 and 4.

The hub C is provided in its pointed end C′ with a bore C^2 into which fits the butt end portion D′ of the needle D, and the inner end of this bore C^2 leads to a larger bore C^3 into which fits the reduced outlet end A′ of the barrel A. The butt end portion D′ of the needle D projects through the bore C^3 and a distance beyond the rear end of the hub C, and this portion of the butt end of the needle fits into the bore A^2 formed in the outlet end A′ of the barrel A. By reference to Fig. 2, it will be noticed that the terminal of the butt end D′ of the needle D is close to the end of the bore in the barrel A so that when the plunger B is forced home practically all the liquid in the barrel is forced directly into and through the needle D. It will be noticed that by this arrangement no liquid passes into the bore C^3 of the head C to render the hypodermic syringe unsanitary. The body of the hub C is preferably oval in cross section, as plainly indicated in Fig. 3, to permit the user to take hold conveniently of the hub C between the forefinger and thumb whenever it is desired to place the hub C and its needle in position on the reduced outlet A′ of the barrel A, or removing it therefrom for cleaning or other purposes. It will also be noticed that by projecting the butt end D′ of the needle D beyond the rear end of the hub C, as shown in Fig. 4, the user can readily engage the projecting end of the needle shank whenever it is desired to place the hub C exteriorly in position on the said outlet end A′.

It is understood that in needles for hypodermic syringes, as heretofore constructed, the shank of the needle was of uniform diameter throughout and fitted in the hub C, but such needles are liable to break off at the point of the reduced end C′ of the hub on using the needle in the usual manner. Now by locating the flexing point of the needle a distance beyond the pointed end of the point C′, that is, at the junction D^4 of the butt and pointed end portions D′, D^2, the needle is not liable to break off even

if bent as it can freely flex at the junction D^4.

Having thus described my invention, I claim as new and desire to secure by Letters Patent:

A hypodermic syringe, comprising a barrel having a reduced outlet end, a hub having a pointed end and a bore in two diameters, the larger bore receiving the reduced outlet of the barrel and the smaller bore extending out through the pointed end of the hub and a hollow needle having a pointed end portion and a butt end portion of greater diameter than the pointed end portion, the butt end portion being of a length to extend from a short distance beyond the pointed end of the hub into the reduced outlet of the barrel to within a short distance of the inner end thereof.

In testimony whereof I have signed my name to this specification in the presence of two subscribing witnesses.

HENRY LAURENT.

Witnesses:

M. ROBIN,

THEO. G. HOSTER, Jr.