Dec. 21, 1937. C. JERABEK 2,102,798

ADVERTISING DEVICE

Filed June 1, 1936 6 Sheets-Sheet 1

Fig. 1.

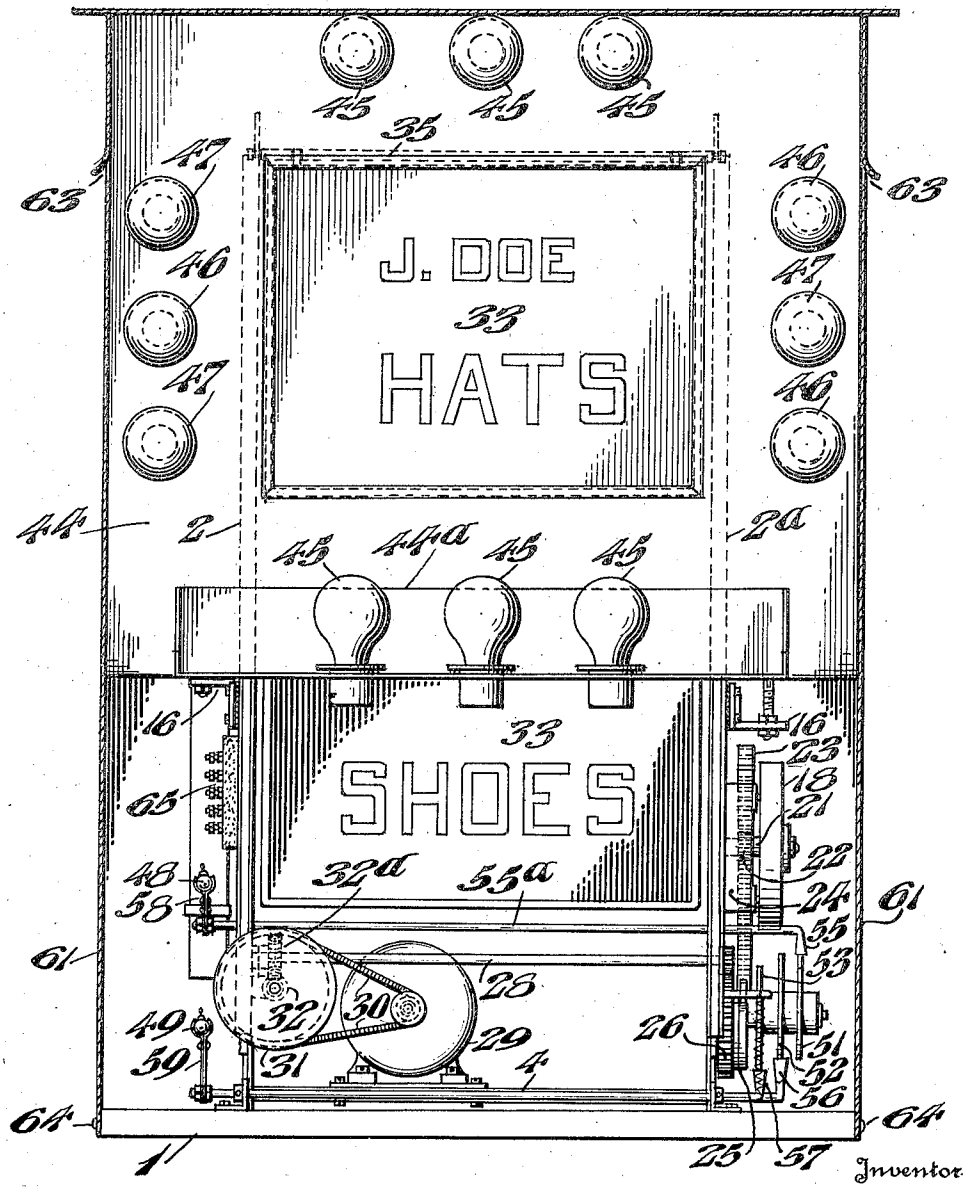

Inventor

CHARLES JERABEK, DECEASED

BY THERESA JERABEK,

ADMINISTRATRIX.

By Louis Nacht

Attorney

Dec. 21, 1937. C. JERABEK 2,102,798

ADVERTISING DEVICE

Filed June 1, 1936 6 Sheets-Sheet 2

Fig. 2.

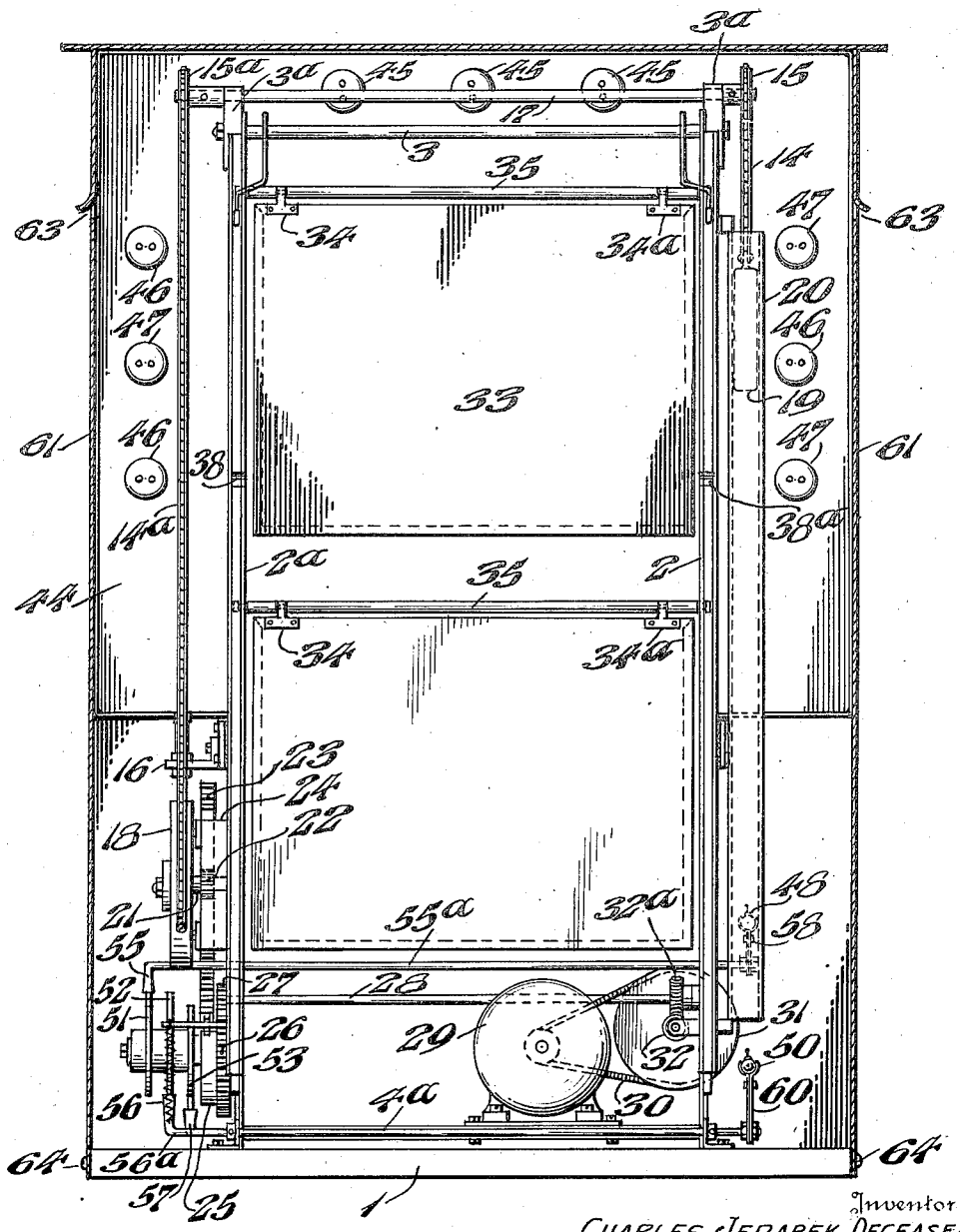

Inventor

CHARLES JERABEK, DECEASED

BY THERESA JERABEK.

ADMINISTRATRIX.

By Louis Mecho

Attorney

Dec. 21, 1937. C. JERABEK 2,102,798

ADVERTISING DEVICE

Filed June 1, 1936 6 Sheets-Sheet 3

Fig. 4.

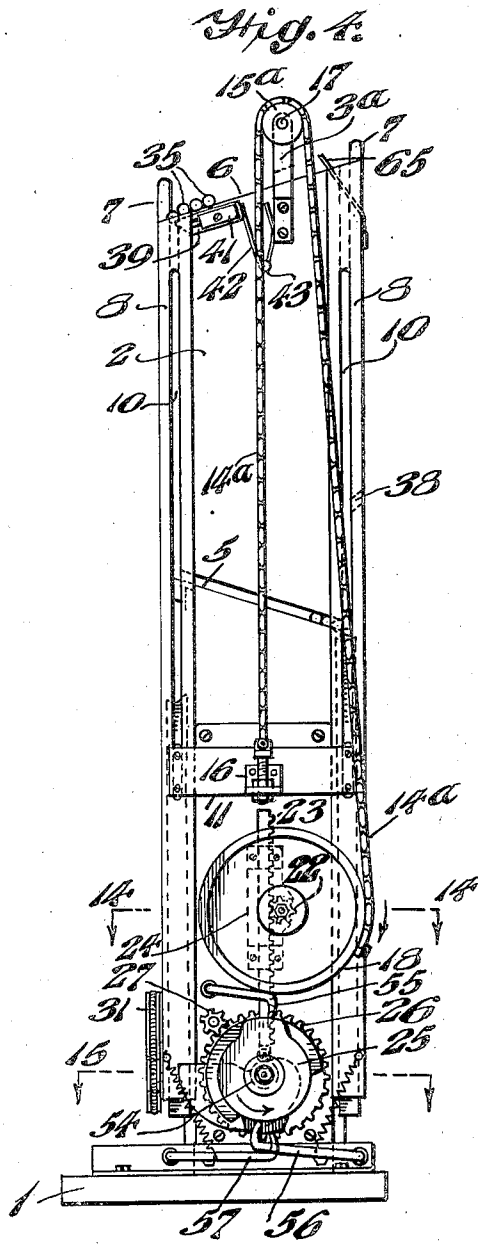

Fig. 3.

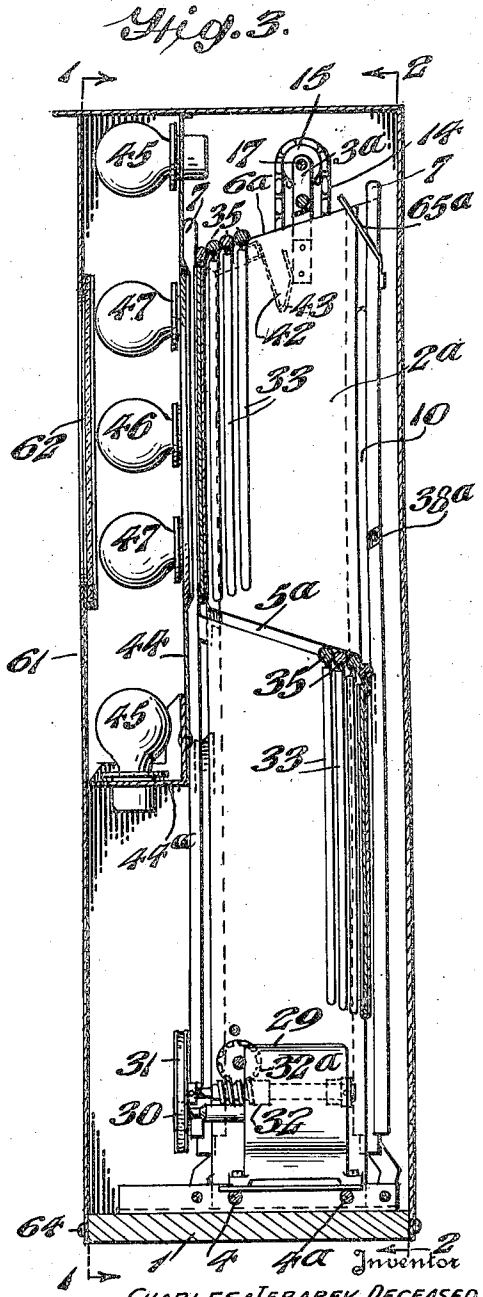

Inventor

CHARLES JERABEK, DECEASED

BY THERESA JERABEK,

ADMINISTRATRIX.

By Louis Neeb

Attorney

Dec. 21, 1937. C. JERABEK 2,102,798

ADVERTISING DEVICE

Filed June 1, 1936 6 Sheets-Sheet 4

Fig. 5.

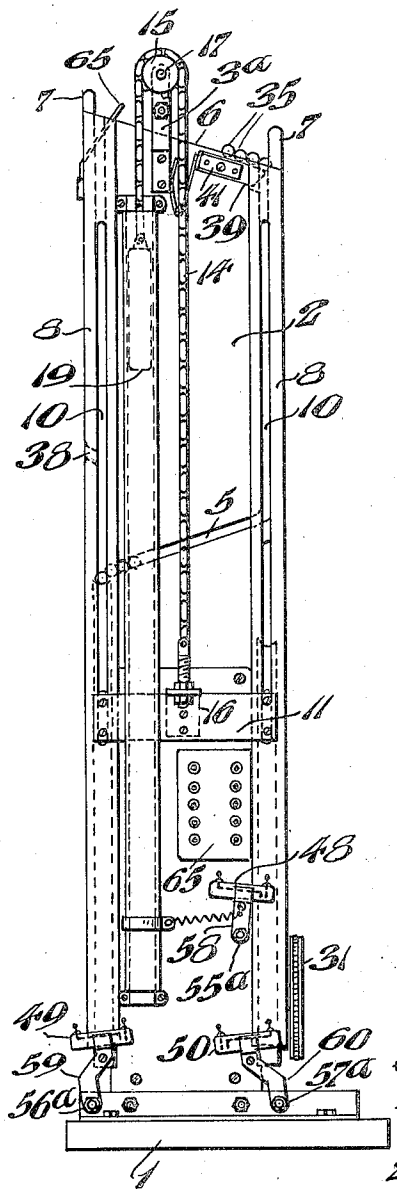

Fig. 16.

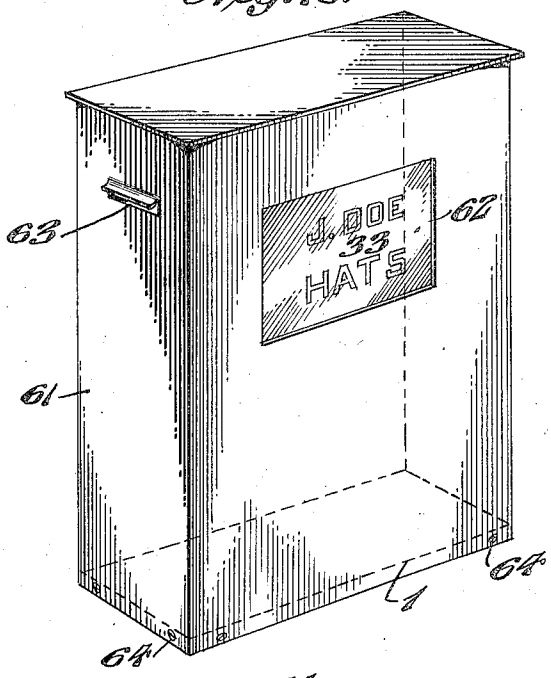

Fig. 17.

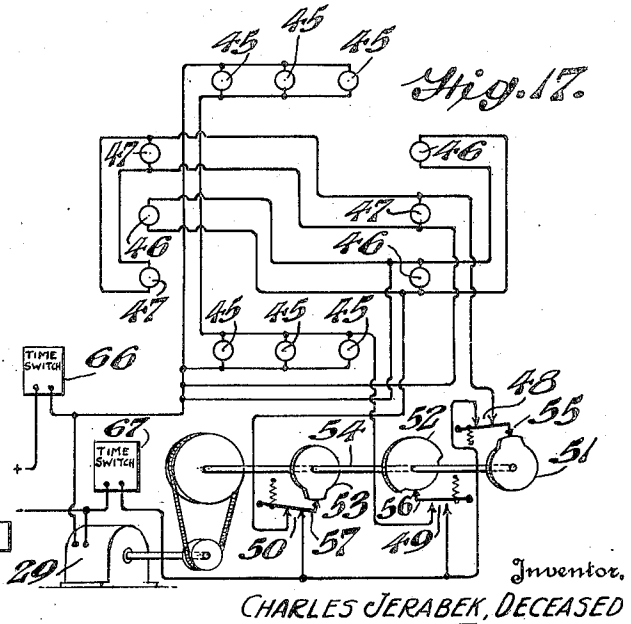

Inventor,
CHARLES JERABEK, DECEASED
BY THERESA JERABEK,
ADMINISTRATRIX.
By Louis Necho
Attorney

Dec. 21, 1937. C. JERABEK 2,102,798

ADVERTISING DEVICE

Filed June 1, 1936 6 Sheets-Sheet 5

Fig. 6.

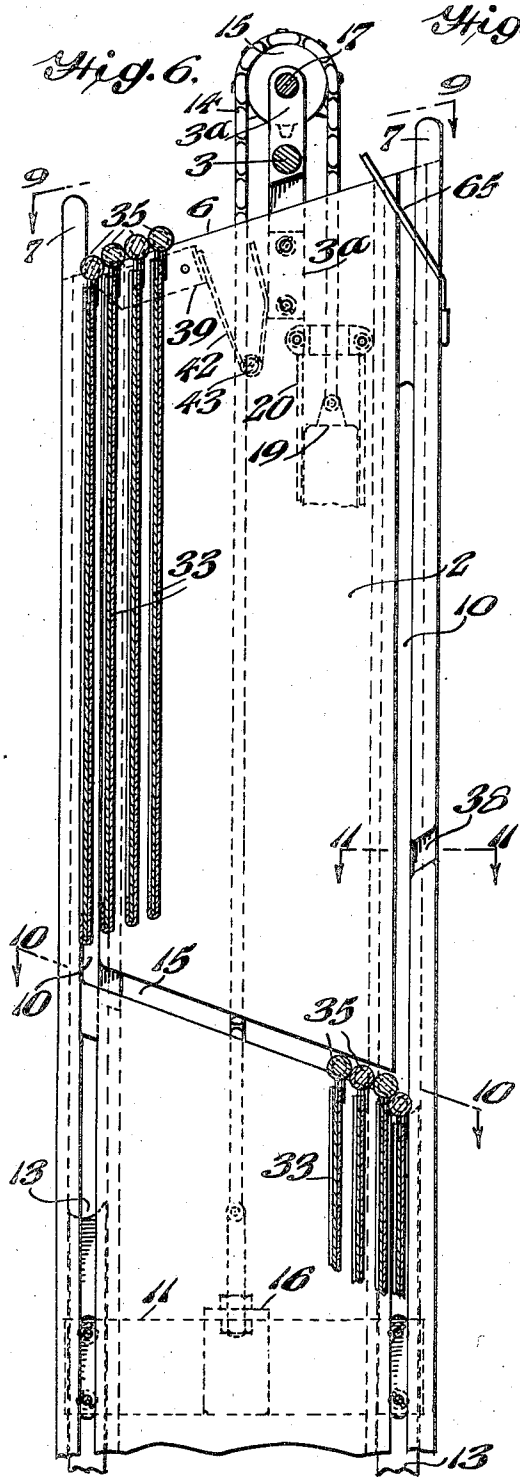

Fig. 8.

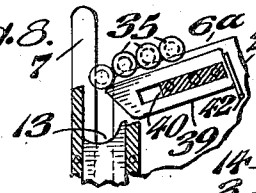

Fig. 7.

Inventor

CHARLES JERABEK, DECEASED

BY THERESA JERABEK,

ADMINISTRATRIX.

By Louis Necko

Attorney

Dec. 21, 1937. C. JERABEK 2,102,798

ADVERTISING DEVICE

Filed June 1, 1936 6 Sheets-Sheet 6

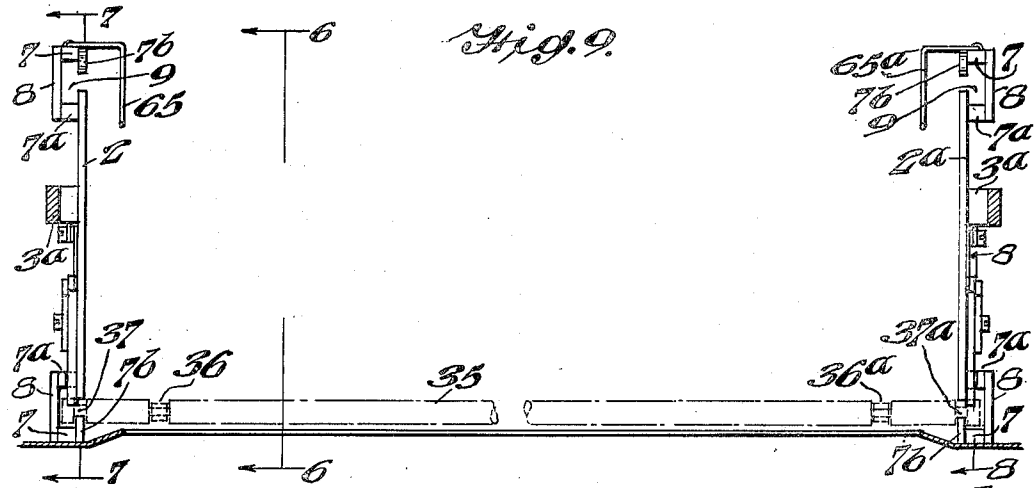

Fig. 9.

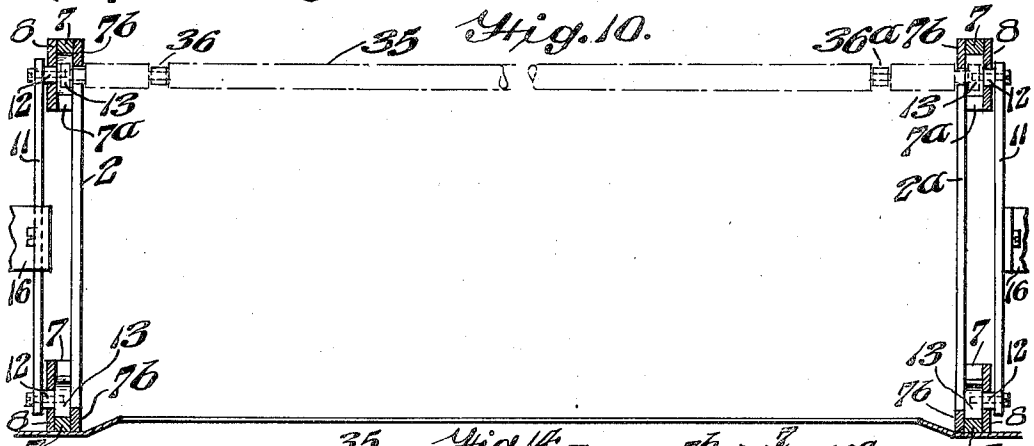

Fig. 10.

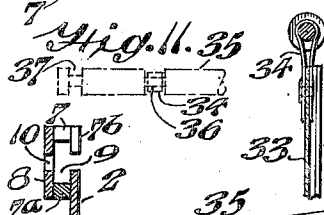

Fig. 11.



Fig. 13.

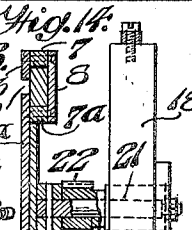

Fig. 14.

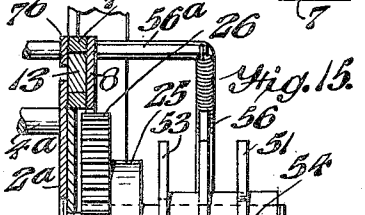

Fig. 15.

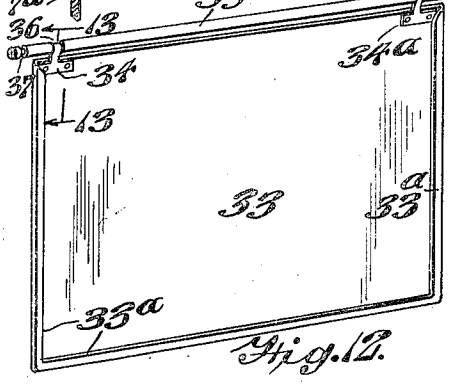

Fig. 12.

INVENTOR
CHARLES JERABEK, DECEASED
BY THERESA JERABEK
ADMINISTRATRIX.
By Louis Necho
Attorney

Patented Dec. 21, 1937 2,102,798

UNITED STATES PATENT OFFICE

2,102,798

ADVERTISING DEVICE

Charles Jerabek, deceased, late of Philadelphia, Pa., by Theresa Jerabek, administratrix, Philadelphia, Pa.

Application June 1, 1936, Serial No. 82,822

3 Claims. (Cl. 40—36)

The invention relates to an advertising device of such construction and nature that it may readily be located in waiting rooms, subway stations, lobbies of hotels or amusement places, in trains, buses or street cars, in show windows, or on the street or hillside in view of the multitudes, or anywhere appropriate or desirable.

An object of the invention is to provide a device that is simple in construction, reliable and automatic in operation, whereby a series of cards, or mats, bearing advertising matter, samples of materials, announcements, patterns, or articles of merchandise, may be successively displayed, each being exposed to view for a predetermined length of time.

Another object of the invention is to provide a device of the nature herein described adaptable to construction in any dimensions desired from the small device suitable for the show window or street car to one of proportions equal or greater than those of the huge billboards often seen on the hilltop or atop large buildings.

A further object of the invention is to provide a device of the nature described wherein attractive illumination features may be provided and controlled by the same actuating mechanism as causes the display portions to be successively exposed to view.

A still further object of the invention is to provide a device of the nature described that is cheap, simple and effective in construction, with parts that may be stamped, punched, formed, or cut from standard material such as sheets, bars and rods of metal or other suitable material, on a production basis thus eliminating, as much as possible, expensive castings and special hand made and commercially complicated parts.

A still further object of the invention is to provide a device of the nature described that is compact and requires a minimum of space for the actuating mechanism and storage of a large number of displays, and yet readily accessible for adjustment, inspection and refilling.

Other objects of the invention reside in the novel features of the mechanism and system hereinafter described and claimed.

The device preferably is formed of a framework provided with a pair of endless guideways arranged in parallel relation on opposite sides of the framework in which the rods of card-supporting frames are adapted to ride in a continuous journey up and down the vertical portions of the guideways by means of elevating mechanism, and from rear to front at the top and front to rear at the bottom by gravity. The portion of the guideway extending from front to rear at the top, as well as a similar but oppositely inclined portion at the bottom, is utilized as magazine space, thus providing two magazines each holding a plurality of card-supporting frames. The card in the foremost card-supporting frame in the upper magazine is exposed to view for a predetermined time and then passes down the vertical portion of the front guideways to the lower magazine where it awaits its turn to be elevated to the rear of the upper magazine. By means of a system of illumination properly timed and actuated by the card-changing mechanism the exposed card may be lowered during a period when there is no illumination and various combinations of lights and colors introduced during the time a card is exposed to view correlated, if desired, with the subject matter of the card. The arrangement of the cards in the upper and lower magazines permits a large number of cards to be carried in much smaller space horizontally than if carried in a single bank.

For a better understanding of the invention reference is to be had to the accompanying drawings forming a part of this specification in which;

Fig. 1 is a front elevation taken on line 1—1 of Fig. 3, showing the enclosing casing 61 partly in section.

Fig. 2 is a rear elevation taken on line 2—2 of Fig. 3, showing the enclosing casing partly in section.

Fig. 3 is a side elevation, partly in section, showing the arrangement of the card frames in the upper and lower magazines, and the enclosing casing in section.

Fig. 4 is a side elevation with the enclosing casing removed, showing the card elevating mechanism and the light switch actuating cams.

Fig. 5 is a side elevation showing the light actuating switches and also the elevating mechanism in position to elevate a card frame from the lower to the upper magazine.

Fig. 6 is a fragmentary view, somewhat enlarged, of a sectional side elevation taken on line 6—6 of Fig. 9, showing the card frames in their respective magazines with the elevating mechanism about to elevate a card frame from the lower to the upper magazine.

Fig. 7 is a fragmentary sectional view, somewhat enlarged, of a side elevation taken on line 7—7 of Fig. 9, showing the reduced diametrical bearing portions of the card frame supporting rods.

Fig. 8 is an enlarged, fragmentary, sectional

side elevation taken on line 8—8 of Fig. 9 of the latch mechanism in the upper magazine, showing the card frame rods in position and the elevator approaching to open the latch and permit the foremost rod to drop into the elevator slide.

Fig. 9 is an enlarged partial plan view, partly in section, taken on line 9—9 of Fig. 6, indicating the position of one of the card frame supporting rods in the upper magazine and showing the latch mechanism adapted to prevent this rod from falling down the front vertical guideway until the elevator arrives at its uppermost position to receive it, and also showing the upper magazine guideway and the front and rear vertical guideways.

Fig. 10 is an enlarged partial plan view, partly in section, taken at the lower magazine on line 10—10 of Fig. 6, showing the lower magazine guideway, with the rear guideways in section.

Fig. 11 is a section taken on line 11—11 of Fig. 6 through the loading slot, and also indicating the end of the card frame rod and its relative position as it enters the loading slot.

Fig. 12 shows one of the card supporting frames and its supporting rod.

Fig. 13 is a section taken on line 13—13 of Fig. 12 showing a means for attaching the card frame to the supporting rod.

Fig. 14 is a partial sectional view taken on line 14—14 of Fig. 4 showing the elevator actuating drum with its associated pinion and rack in section.

Fig. 15 is a partial sectional view taken on line 15—15 of Fig. 4, showing the electric switch actuating cams and followers.

Fig. 16 is an elevational perspective view of the casing for enclosing the mechanism.

Fig. 17 shows a wiring diagram or system of connections for the illuminating lamps, together with a diagrammatic representation of the actuating cams, their driving mechanism and switches.

Secured to a base 1, Figure 1, of wood, metal or any other suitable material, is a framework composed of side portions 2 and 2*a* each consisting of an upper and lower plate or sheet of steel, aluminum or other suitable metal, rigidly secured in spaced relation at the top by means of a spacing rod 3 and bracket 3*a*, and at the bottom by means of spacing rods 4 and 4*a*, Figures 1, 2, 3, and 15. The lower end of each upper side plate and the upper end of each lower side plate is cut at a suitable angle and the upper and lower side plates on each side are spaced a suitable distance one above the other to form a parallel pair of inclined guideways or grooves 5 and 5*a*, Figures 3 and 4, inclined toward the rear comprising the lower magazine and forming a bearing surface for the ends of the card frame supporting rods 35. The upper end of each upper side plate is also cut at a suitable angle to form a parallel pair of inclined guideways 6 and 6*a*, Figures 3 and 4, inclined toward the front, comprising the upper magazine and forming a bearing surface for the ends of the card frame supporting rods 35. The upper and lower side plates on each side have their front and rear vertical edges further strengthened by means of flat strips 7, 7*a*, and 7*b* and plates 8, Figure 9, which are secured together and to the side plates 2 and 2*a* by riveting, spot welding or otherwise, and run practically throughout the entire vertical length of the side plates. This form of corner construction provides a guideway or slot 9 at each of the four corners of the framework in which the extreme end portions or heads of the card frame supporting rods ride and co-acting with upper and lower inclined guideways 5 and 6 forms an endless guideway around which the card carrying frames may travel by means of their supporting rods. These slots 9 also form the guideways for the card frame elevators. Vertical plates 8, Figures 4, 6, 8, and 10, are provided with vertical slots 10 through which the supporting members or tie plates 12 of the elevators operate.

As shown in Figures 4, 5, and 10, a pair of elevators, one on each of the two sides of the framework, are provided each consisting of a horizontal tie plate 11, spacer 12 and slide 13 suitably secured together by means of screws or tap-bolts as indicated. The upper ends of the slides 13 are recessed or concave, as shown in Figures 6 and 7, in order to center the heads of the card frame supporting rods upon them when in contact therewith.

The elevator on each side of the framework is operated by means of individual hoist chains 14 and 14*a* secured at one end to the tie plates 11 by means of a bracket 16, or in any other suitable manner as shown in Figures 2, 4, and 5, and cooperating with sprocket wheels 15 and 15*a* over which they respectively pass and these sprocket wheels are each secured to opposite ends of rotatable shaft 17 operating in bearing brackets 3*a*. The opposite end of hoist chain 14*a* is attached to hoist drum 18, Figures 1, 2, 4, and 14, while the opposite end of chain 14 is secured to a counter weight 19, Figures 2, 5, 6, and 7, protected by and operating within tube or casing 20 which is supported by being secured at its upper and lower ends to side plate 2. This counter weight serves to keep the hoist chains taut but is sufficiently lighter in weight than the elevators so as not to interfere with their downward motion by means of gravity. Hoist drum 18 is secured to drum shaft 21, suitably provided with a bearing, to which is also secured a pinion 22 engaging a vertical rack member 23 slideably positioned in bracket 24 and contacting and co-acting with or following the diametrical contour of actuating cam 25. Thus whenever cam 25 is rotated in one direction a vertical reciprocating motion will be imparted to rack 23 which in turn will cause engaging pinion 22 and associated hoist drum 18 to rotate first in one direction and then in the opposite direction, causing chain 14*a* to be wound upon the drum and thus causing the elevators, previously described, to go up and down their line of travel. Cam 25 is secured to or formed by a portion of the hub of gear 26 and secured to shaft 54. Gear 26 engages pinion 27 which in turn is secured to drive shaft 28 to be rotated at suitable speed by means of a driving motor 29 mounted on and secured to spacing rods 4 and 4*a*, belt 30, pulley 31, speed reduction worm 32 and gear 32*a* which latter is secured to the opposite end of drive shaft 28.

Card supporting frame 33, Figures 12 and 13, consists of a sheet of aluminum, celluloid, or other suitable material and provided with a card retaining groove or channel formed along its lower horizontal and two vertical sides by bending same to form a U-shaped recess 33*a* for retaining in position an advertising card or other display or material of suitable size that may be dropped or lowered into same from the top of the frame. The card frame 33 is provided at the top with two suitable suspension brackets 34 and 34*a* riveted or otherwise secured to the sheet of which the card frame is formed. At the upper

end of these brackets and integral therewith a bearing may be formed, as shown in Figure 13, coacting with the corresponding reduced portions **36** and **36***a* respectively of supporting rod **35**. Supporting rod **35** may consist of a suitable length of round bar of steel, bronze or other suitable material, provided with reduced diametrical portions **36** and **36***a*, and **37** and **37***a* as shown. It will be readily understood that in lieu of the two suspension brackets **34** and **34***a* a single bracket may be used, or a portion of the sheet of material of which the card supporting frame is made may be bent around the supporting rod **35** to form a suspension bearing in which rod **35** may rotate while the card frame proper remains stationary. The diametrically reduced portions **37** and **37***a* are respectively supported on the upper inclined end of the upper and lower side plates **2** and **2***a* whose edges engage the reduced portions **37** and **37***a* of rods **35** as clearly shown in Figures 4, 5, 6, and 7.

It will thus be readily understood that if a plurality of card supporting frames are placed in the upper and lower magazines **5** and **6** by inserting them in the rear elevator guideways through angular slots **38** and **38***a* and shifting them around into proper position those so placed in the upper reservoir will flow toward the front of the machine due to the inclination of the upper guideways in that direction, and those similarly placed in the lower reservoir will flow toward the rear due to the inclination of their guideways in a rearward direction. If now the driving motor **29** is placed in operation the chain raised elevators, whose normal position of rest is at the bottom of the vertical guides, will, by means of their rear slides, elevate the rearmost card frame from the lower reservoir to the rear of the upper reservoir. When this card frame rod approaches the upper magazine guideways **6** and **6***a* it will force back springs **65** and **65***a* which are secured to rear vertical members **7**, Figure 9, and these springs will serve to impart the initial motion to the card frame rod to force it from its curved recess in the rear elevator slides **13** out onto the upper magazine guideways **6** and **6***a*. Upon arrival at their uppermost position the front slides of the elevators will receive the foremost card frame from the upper reservoir and lower it to the lower reservoir. The foremost card frame in the upper reservoir will, until the arrival of the elevator and through the arrangement of the front covering portion and enclosing casing, be exposed to view until lowered to the lower reservoir where it will await its turn to again complete the excursion.

At the top of each of the vertical front guideways **9** a suitable latch mechanism is provided to prevent the card frames in the upper magazine from falling down the guideways while the elevator is in a lowered position. These latch mechanisms each consist of latch bar **39** slidably mounted on bearing piece **40** and retained in position by means of cover plate **41**. Bearing piece **40** and cover plate **41** are riveted or otherwise secured together and to the side plates **2** and **2***a*, Figures 4, 5, 6, 7, and 8. The upper surface of latch bars **39** is located in parallel position with the upper magazine guideways **6** and **6***a* but placed slightly below them and are provided with angular ends extending over and thus covering the front elevator guideways being retained in this position by means of a U shaped spring **42** mounted at the center on a bolt or screw **43** in the side plates **2** and **2***a* and having its free end in contact with and exerting a thrust pressure on the back of latch bolt **39** forcing same toward and thus covering the front guideways. The opposite ends of springs **42** are in forced contact against the sides of brackets **3** and **3***a* respectively. When the front elevator slides **13**, Figures 6 and 7, approach the top of their guideways they come in contact with the angular face of sliding latch bolts **39** and force these bolts back sufficiently to uncover the front vertical guideways and permit the foremost card frame supporting rod **35** to slip onto the front elevator slides. As these elevator slides descend the latch bolts **39** are released and slip back into their normal positions again covering the tops of the front vertical guideways and supporting the new foremost card frame rod **35** in front position.

The upper portion of the front side of the frame work is covered by means of a suitable plate or sheet **44** of metal or other material, Figures 1, 2, and 3, provided with an opening through which the card in the foremost upper card frame may be viewed. This plate together with an attached shelf portion **44**a supports a plurality of electric light receptacles **45**, **46**, and **47** located along the top, bottom and sides of the opening and containing bulbs of any suitable size, color or combination of colors, for the purpose of illuminating the display matter **33**. These receptacles may be suitably connected, as for example, as shown in Figure 17, to flash switches **48**, **49**, and **50**, actuated by means of rotatable cams **51**, **52**, and **53** located on shaft **54** driven through proper reduction gears by driving motor **29**. These cams are secured to shaft **54** by means of set screws so that their relative rotatable positions may be varied accordingly to permit the bulbs in receptacles **45**, **46**, and **47** to be illuminated at any desired time and in any suitable or desired combination correlated with the position of the display **33**.

For example, it may be desirable to have the display **33** lowered from its position in front of the upper magazine to the lower magazine with all lights extinguished and then as soon as the next display is in position to be viewed the upper and lower bank of bulbs, in receptacles **45**, of any suitable color may be flashed on and allowed to burn for a few moments, as they are extinguished the bank of bulbs in receptacles **46**, of another color or combination of colors, may be illuminated followed by bank **47** of still another color and thus continue so long as the mechanism is in operation. In this manner color combinations suitable or adapted to the coloring matter of the changeable display **33** may be provided and correlated therewith at will.

The detail of the mechanism for operating the flash switches is shown in part in Figures 1, 2, 4, and 15 in which the cams **51**, **52**, and **53**, respectively, are secured to the same rotatable shaft **54** as are the elevator actuating cam **25** and gear **26**. Cam followers **55**, **56**, and **57**, respectively, are formed by suitably bending one end of each of the rods **55***a*, **56***a*, and **57***a* at right angles. These rods are passed through bearing holes in the side plates on each side of the framework and have suitable brackets **58**, **59**, and **60**, respectively, secured to their opposite ends, each of such brackets being adapted with spring-clip portions to hold a switch device of the usual mercury tube arrangement comprising a sealed glass tube containing a small quantity of mercury and two sealed-in contacts projecting into

the inner recess of the glass tube. When such a tube is tilted, in this case by means of the cams **51**, **52**, and **53** and co-acting followers **55**, **56**, and **57** acting through shafts **55***a*, **56***a*, and **57***a*, the globule of mercury flows according to the inclination of the tube to either end, and in one inclined position closes the circuit between the pair of sealed-in contacts in one end of the tube, and in the opposite inclined position the mercury flows away from the contacts and thus opens their respective circuits.

An enclosing casing or cover **61** made of suitable sheet material and provided with a glass covered window **62**, and a pair of ventilators **63**, is adapted to be lowered over the top of the mechanism to protect same from the natural elements and prevent unauthorized tampering with the mechanism. This casing may be secured to the base **1** by means of screws **64** or in any other suitable manner. In the case of large display, the enclosing casing or cover may consist of permanent portions in which doors, or other suitable openings to permit of access to the interior mechanism may be provided. If desirable, or necessary, the interior surface of enclosing cover **61** facing the light bulbs **45**, **46**, and **47**, may be of, or covered with, a good light reflecting material, or reflectors may be attached or secured thereto, to reflect a maximum of light on display **33**. It will also be understood that any suitable number and combination of lights and associated circuits, switches, and actuating mechanism may be used as desired depending upon the size and other requirements of any particular device of this or similar construction. A terminal block **65**, Figure 5, is provided on one side of the framework to facilitate electrical connections and for readily altering the operating combinations of the lighting bulbs. In order that the mechanism may be allowed to rest and all illumination dispensed with during any desirable periods, an automatic main time switch has been provided in the feed line supplying the device as shown in Figure 17 at **66**. A second automatic time switch **67** has been provided as shown operating only on the illuminating lamp circuit so that illumination may be provided if desired only during the hours of darkness.

As indicated by the foregoing description this device may be constructed in a very inexpensive but thoroughly practical manner principally of such standard materials as sheets, rods, and bars, by cutting, bending, stamping or otherwise manipulating them as required, and also by the use of standard shafts, gears, pulleys and the like, of any suitable material thus being particularly adapted to rapid and low cost production methods rather than to the slow cumbersome assembly that would otherwise prevail were the parts so designed as to require special castings, complicated forgings and other special hand formed parts incidental to design of less efficiency respective to manufacturing costs.

Having thus described the invention, what is claimed as new and desired to be secured by Letters Patent is:

1. In a device of the character described, the combination comprising an upper magazine, a lower magazine, a plurality of card carrying frames in each of said magazines, a pair of endless guideways around which said frames travel, a pair of elevators for elevating said frames from the lower magazine to the upper magazine and for lowering said frames from the upper to the lower magazine, and means operated by said elevators for releasing said card frames in the upper magazine to permit them to be deposited on said elevators.

2. In a device of the character described, the combination comprising an upper magazine, a lower magazine, a plurality of card carrying frames in each of said magazines, a pair of endless guideways around which said card frames travel, a pair of elevators for elevating said card frames from the lower magazine to the upper magazine and for lowering said card frames from the upper to the lower magazine, and a latch operated by said elevators for releasing said card frames in the upper magazine to permit them to be deposited on said elevators.

3. In a device of the character described, the combination comprising an upper magazine, a lower magazine, a plurality of card carrying frames in said magazines, a pair of endless guideways around which said card frames travel, a pair of elevators for elevating said card frames from the lower to the upper magazine and for lowering said card frames from the upper to the lower magazine, means for actuating said elevators comprising a pair of hoisting chains supported by chain sprockets, a hoist drum upon which one of said chains is adapted to wind, a rack and pinion cooperating with a cam device for imparting a reversible rotative motion to said drum, and means for driving said cam.

THERESA JERABEK,
Administratrix of the Estate of Charles Jerabek, Deceased.