United States Patent [19]

Wilder et al.

[11] **3,872,263**

[45] **Mar. 18, 1975**

[54] **HAND-HELD DICTATE AND PLAYBACK INSTRUMENT**

[75] Inventors: **Leslie N. Wilder,** New Rochelle, N.Y.; **George L. Soltis,** Shelton, Conn.; **Theodore P. Nenninger,** East Brunswick, N.J.; **Anthony Ciaraldi,** Stamford, Conn.

[73] Assignee: **Dictaphone Corporation,** Rye, N.Y.

[22] Filed: **Dec. 26, 1972**

[21] Appl. No.: **317,929**

[52] **U.S. Cl.** ..... **179/100.1 DR,** 200/1 A

[51] **Int. Cl.** **G11b 19/16,** H01h 9/00

[58] **Field of Search** ..... 179/100.1 DA, 6 E; 200/1 A, 1 TK, 6 R, 166 J, 283

[56] **References Cited**

UNITED STATES PATENTS

3,671,680 6/1972 Nye ..... 179/6 E

FOREIGN PATENTS OR APPLICATIONS

863,576 3/1961 United Kingdom..... 179/100.1 DR

Primary Examiner—Bernard Konick
Assistant Examiner—Alan Faber
Attorney, Agent, or Firm—Curtis, Morris & Safford

[57] **ABSTRACT**

A hand-held dictate and playback instrument is provided within a housing having the general configuration of a telephone receiver. The actuating mechanism to control associated dictation equipment comprises a yoke actuated switch assembly which may be readily actuated by the user whether the instrument is held in the left or right hand. The yoke is disposed across the back of the receiver instrument and is readily movable longitudinally of the receiver axis by the thumb of the hand holding the receiver to place the dictation equipment in the playback mode in one position and back space or rewind mode in the other position. A laterally movable slide is disposed within the yoke and is readily actuated from either side of the receiver instrument by the user's thumb to place the dictation equipment in the dictate mode.

9 Claims, 9 Drawing Figures

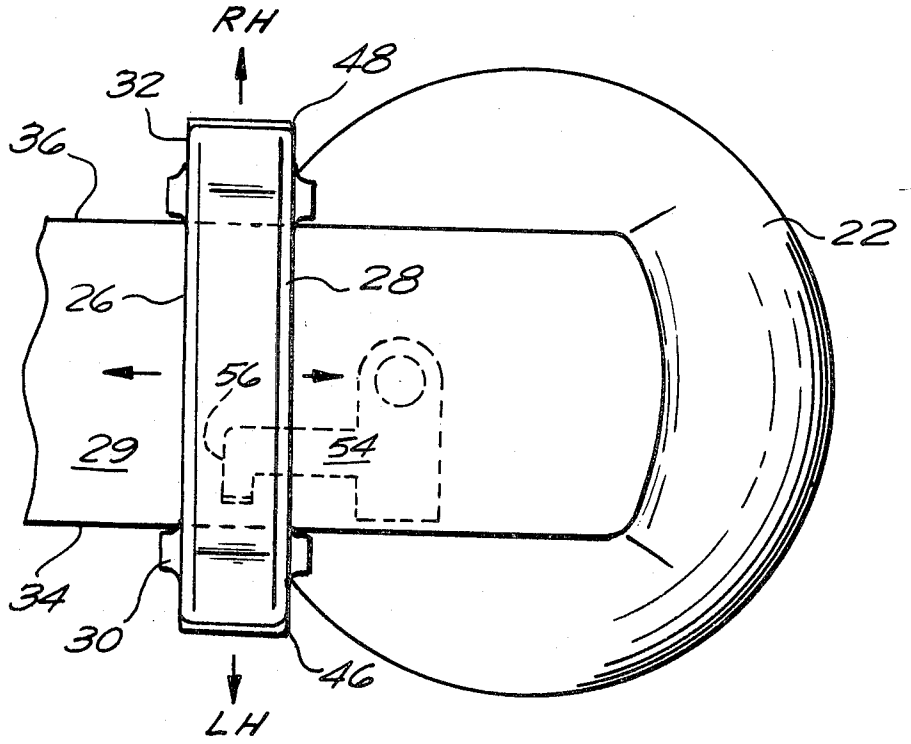

FIG. 1

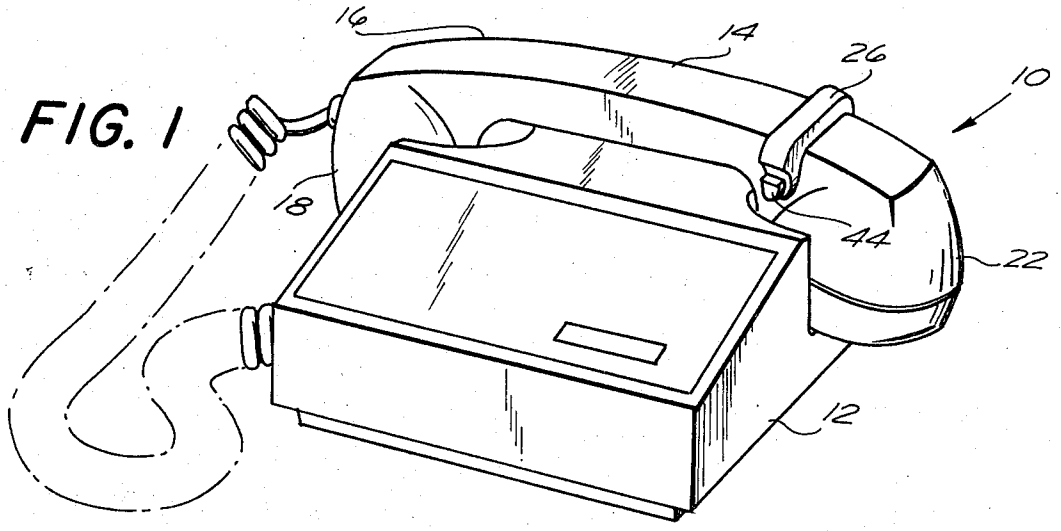

FIG. 2

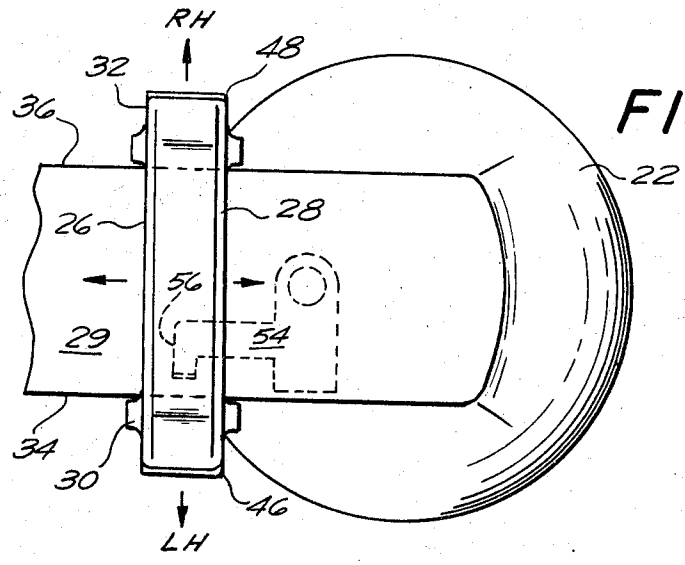

FIG. 3

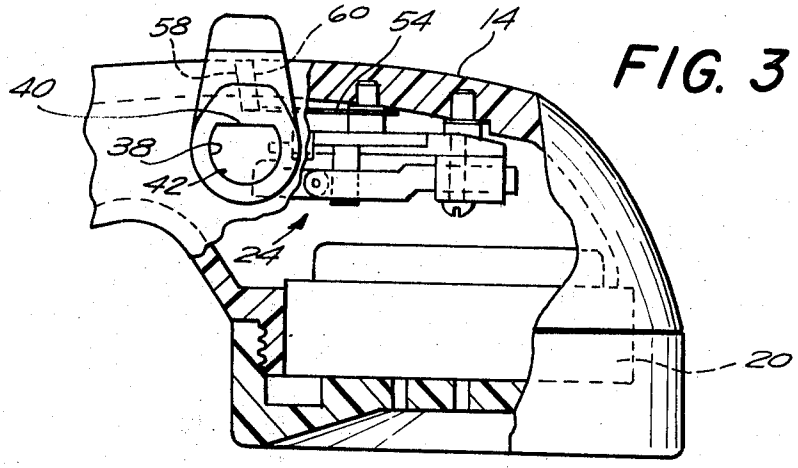

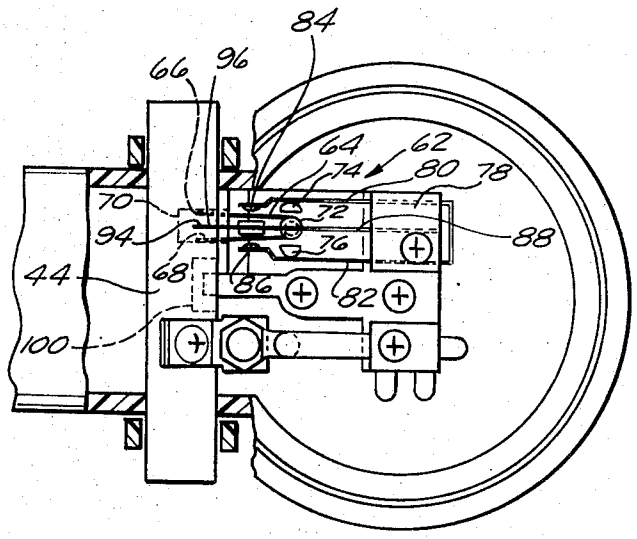

FIG. 4

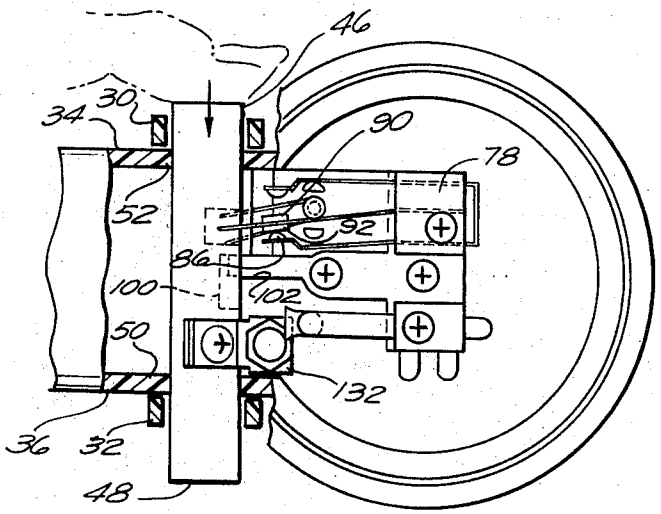

FIG. 5

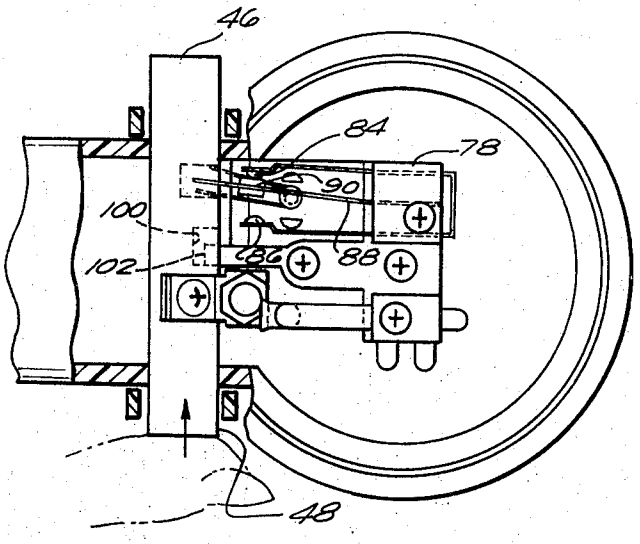

FIG. 6

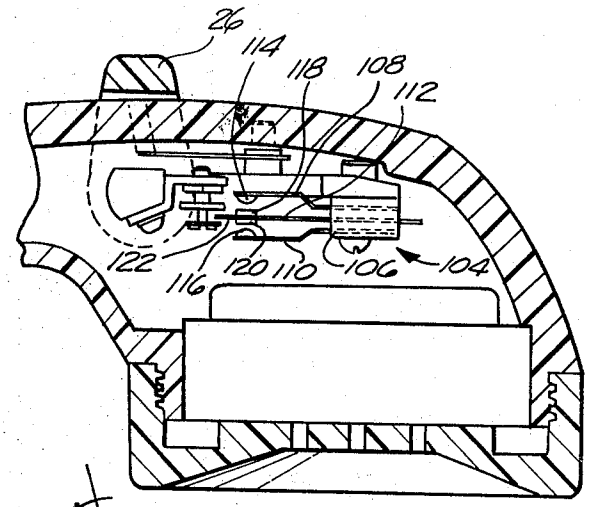

FIG. 7

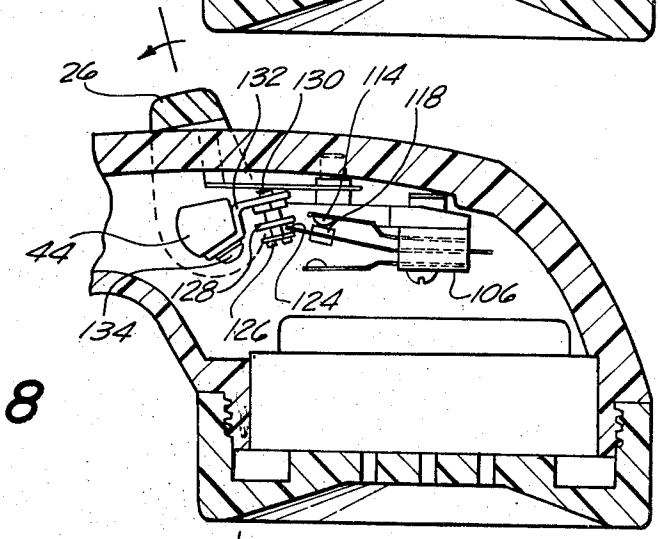

FIG. 8

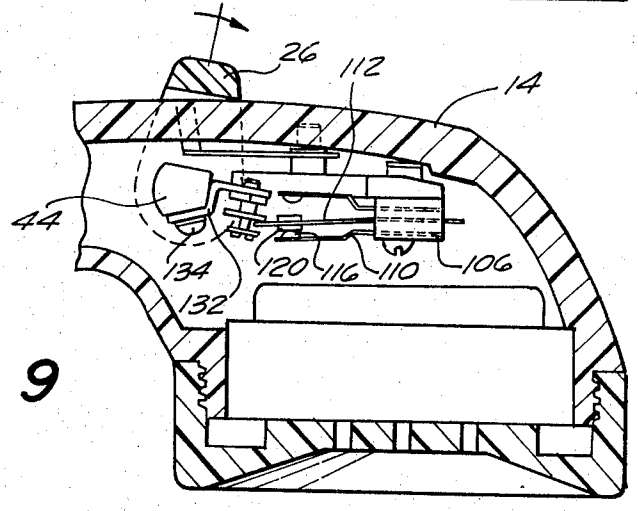

FIG. 9

HAND-HELD DICTATE AND PLAYBACK INSTRUMENT

The present invention relates to dictation and playback equipment and more particularly relates to a hand-held dictate and playback instrument and the switching means employed in the dictate-playback instrument to place the associated dictation equipment in various operating modes.

The present invention relates to the hand-held instrument used by a dictator with dictation equipment of the type where the dictator transcribes his orally expressed thoughts on an audio reproducing medium, which may be magnetic tape or belts or plastic discs, belts or records in which the audio signal in impressed on the recording medium by a scribing device. During dictation, the dictator often finds a need to review a portion of the material he has already dictated and, accordingly, most dictation equipment of this general type is provided with means to reverse or back space the belt or tape to provide the dictator with a quick review of material he has previously dictated. Typically, the microphone to record dictation and a speaker to play back previously recorded dictation and the appropriate controls to place the equipment in the dictate, playback and reverse modes are incorporated in a single microphone-type instrument. Because use of a microphone-type instrument often creates psychological barriers which tend to inhibit spontaneous and natural dictation, it has been found that effective use of dictation equipment is not achieved.

Since most individuals throughout their lifetime have used a telephone and have acclimated themselves to spontaneous and effective communication using a telephone receiver, it has been determined that maximum utilization of dictating equipment may be obtained where the dictating and playback instrument is housed in a device having the configuration of a telephone receiver. Because of the long experience using a telephone receiver a comfortable and accustomed usage pattern results which tends to minimize latent inhibitions in using dictating equipment.

Accordingly, it is an object of the present invention to provide a dictate and playback instrument for use in dictation equipment which is effectively and conveniently housed in a device having the configuration of a telephone receiver.

It is a further object of the present invention to provide a hand-held dictating and playback instrument in which the controls to place the associated dictation equipment in the dictate, back space and playback modes are conveniently mounted for ease of manipulation with either the right or left hand of the user.

These and other objects and advantages of the present invention will be more readily apparent after consideration of the following specification and the accompanying drawing, in which:

FIG. 1 is a perspective view showing the hand-held dictate and playback instrument of the present invention mounted on a convenient desk housing;

FIG. 2 is a top view of a portion of the dictate-playback unit showing the mounting for the control mechanism thereon;

FIG. 3 is an elevational view, partly in section, showing the control mechanism of the dictate-playback instrument of the present invention;

FIG. 4 is a partial plan view, partly in section, showing a neutral position of one of the switch controls on the device of the present invention;

FIG. 5 is a view similar to FIG. 4 showing the position of the switch shown in FIG. 4 in a dictate mode when actuated by the left hand of a user;

FIG. 6 is a view similar to FIG. 5 showing the position of the switch shown in FIG. 4 in a dictate mode when actuated by the right hand of a user;

FIG. 7 is an elevational view partly in section showing a neutral position for another of the switches on the device of the present invention;

FIg. 8 is a view similar to FIG. 7 showing the switch of FIG. 7 actuated into the playback mode; and

FIG. 9 is a view similar to FIG. 8 showing the switch in a rewind or back space mode.

With reference to the drawing and particularly FIGS. 1–3, a dictator station 10 is shown which may be connected to a remote magnetic tape storage unit and transcribe station. The dictator station 10 includes a base unit 12 which houses some electronic circuit components and forms a cradle for a dictation and playback instrument 14. The dictation and playback instrument 14 is housed within a housing 16 having the configuration of a telephone receiver unit and includes a microphone unit in one end 18 and a speaker unit 20 in the other end 22. Thus, the receiver instrument 14 functions just like a telephone receiver with voice transmission being picked up by the microphone in end 18 and audio play back being received in the speaker unit in end 22.

To properly function as an instrument for a dictation system, unit 14 is provided with switch controls to place the unit in a dictate mode, a playback mode and, to provide the dictator with the facility to review material he has previously dictated, a control to back space or reverse the record medium so that previously dictated material can be reviewed.

Accordingly, unit 14 is provided with a yoke activated switching assembly 24 which activates appropriate electronic circuits to place the unit in any of the three operating modes. Switch assembly 24 comprises a U-shaped yoke member 26 having a bight segment 28 which is spaced from, and overlies, the rear 29 of the receiver unit 14 and depending leg segments 30 and 32, respectively, which are disposed spaced from, but parallel to, the opposed lateral sides 34 and 36, respectively, of the receiver unit 14.

Each of the leg segments 30 and 32 are provided with an irregularly shaped aperture 38 therethrough. Preferably, the apertures 38 have a cross-sectional configuration of a major circular segment with a flat portion 40 and a rounded portion 42. A slide member 44 having extending end segments 46 and 48 extends through apertures 38, and apertures 50 and 52, respectively, (see FIGS. 4–6) in lateral sides 34 and 36 of the receiver unit 14. The extending ends 46 and 48 of slide 44 have a corss-sectional configuration corresponding to the cross-sectional configuration of apertures 38 to preclude rotation of the slide within the yoke 26. Slide 44 is laterally slidable within apertures 50 and 52 and is also rotatably retained within these apertures so that the slide 44 and yoke 26 are pivotally disposed about a pivot axis corresponding to the longitudinal axis of the slide 44.

The pivoting action of the yoke 26 is limited by the spacing between the bottom of the yoke 26 and the top

29 of the receiver unit 14 with the spacing being selected to provide sufficient degree of movement to actuate the switch contacts, as will be explained more fully hereinafter.

As best shown in FIG. 3, a support member 54 is secured within end 22 of the receiver 14 and includes a leg segment 56 disposed beneath yoke 26. Leg 56 houses a spring member (not shown) which extends outwardly through a spring aperture 58 in lateral side 34 of the receiver 14. The spring engages within a slot 60 on the inside face of depending leg 30 of yoke 26. The spring tends to maintain the yoke in an upright or neutral position and returns the yoke to the upright or neutral position after it has been displaced to actuate one of the switches as will be explained more fully hereinafter.

Reference is now made to FIGS 4–6 where the switch assembly actuated by lateral movement of the slide 44 is shown. As pointed out previously, slide 44 is disposed to slide laterally and controls a switch assembly 62 to control the dictation apparatus associated with the present invention to place the apparatus in the dictate mode. Because the telephone style receiver 14 of the present invention is universally adapted to be used by either the left-hand or the right-hand of a dictator, the exposed ends 46 and 48 of slide 44, which act as finger contacts, are most conveniently positioned for actuation by the thumb of the left and right hand, respectively. Thus, when the instrument is used by a dictator in the left hand, the most convenient portion of the dictate mode actuating slide 44 to be contacted is contact end 46 (see FIG. 5) and, when used by a dictator in his right hand, the most convenient contact is the end 48 (see FIG. 6). By depressing either end 46 or 48, slide 44 is made to slide laterally within the receiver housing 14 and movement of the slide 44 in either direction will actuate contact switch assembly 62 to place the associated equipment in the dictate mode.

The neutral dictate mode position is illustrated in FIG. 4 with slide 44 being centrally positioned. Slide 44 is maintained in the neutral position by a centering spring 64. Centering spring 64 is a U-shaped spring member having leg segments 66 and 68 which are disposed within a spring receiving slot 70 in slide 44. The spring is retained on a spring post 72 on member 54 and is held on spring post 72 by spring posts 74 and 76. When the contact pressure on either contact end 46 or 48 of slide 44 is removed, spring 64 returns the slide to the dictate-neutral position.

The contact switch assembly 62 includes a microswitch assembly 78 mounted within the receiver housing 14 which has a pair of laterally spaced contact arms 80 and 82 extending therefrom. The arms 80 and 82 are disposed outside of spring posts 74 and 76, respectively, and include electrical contact elements 84 and 86, respectively, at their ends. A contact arm 88, having electrical contact elements 90 and 92 on each side thereof, extends from microswitch element 78 between the arms 80 and 82. Contact arm 88 includes an extending leg 94 which is slidably disposed within a slot 96 in slide 44. In the dictate-neutral position (FIG. 4) each of the contact elements 90 and 92 are spaced from the contact elements 84 and 86 so that the microswitch 78 is in an unactuated state.

When the instrument 14 is held in the left-hand of a dictator, the dictator's thumb conveniently contacts contact end 46 of slide 44 and, when pressure is applied on the contact end 46, slide 44 moves laterally. Because leg 94 of contact arm 88 is fixed within slot 96 of slide 44, movement of the slide 44 will move contact arm 88 so that contact element 92 moves into abutting relationship with contact element 86 on contact arm 82. This contact actuates microswitch 78 to complete an electrical circuit (not shown) which places the associated dictation equipment in the dictate mode so that the dictator's voice transmission is recorded. In like manner, (see FIG. 6), when the instrument is held in the right-hand of a dictator, the most convenient portion of slide 44 to be contacted is contact end 48 and, when pressure is applied on contact end 48, slide 44 moves laterally to bring contact element 90 into abutting relationship with contact element 84 to again actuate microswitch 78 to close the electrical circuit to the associated dictation equipment and place the apparatus in the dictate mode.

To limit the movement of slide 44 within the instrument 14 a guide slot 100 is provided along the midportion of slide 44 and a slide abutment stop 102, which is secured within the instrument housing, fits, within slot 100 to limit the degree of movement of slide 44. Thus, the stop 102 as it abuts against either end of slot 100 limits the further lateral movement of slide 44.

Reference is now made to FIGS. 7–9 for a discussion of the actuation of the switch assembly associated with the playback and back space modes. As noted previously, yoke 26 is pivotally disposed on the receiver 14 and is conveniently positioned for easy grasp by the thumb of the dictator's hand in which the instrument is held. Thus, the dictator may depress the yoke with relative ease to the position shown in FIG. 8 to actuate a switch assembly to place the associated dictation equipment in the listen or playback mode or push the yoke 26 to pivot it to the position shown in FIG. 9 to actuate a switch assembly to place the associated dictation equipment in the reverse or back space mode. Because the yoke is spring biased, when the dictator removes his thumb from the yoke, the yoke centers itself to the neutral position shown in FIG. 7.

A switch assembly 104 is also mounted within the receiver 14 and includes a microswitch 106 provided with vertically spaced contact arms 108 and 110 extending therefrom. A contact arm 112 also extends from microswitch 106 and is disposed between the contact arms 108 and 110. A contact element 114 is provided on the end of contact arm 108, contact element 116 on the end of contact arm 110 and contact elements 118 and 120 on each side of contact arm 112. Contact arm 112 also includes an extension 122 which fits loosely within a spacing 124 formed by the head 126 of a screw 130 and a washer 128 threadably disposed on the shank of screw 130. The screw 130 is threadably secured to a bracket 132 secured by a screw 134 to the slide 44.

When yoke 26 is pivoted to the position shown in FIG. 8, to place the associated dictation equipment in the playback mode, slide 44 which is heyed within apertures 38 in the legs of yoke 26 also pivots so that the extension 122 of contact arm 112 is moved as the head 126 of screw 130 pivots into contact with extension 122 to place the contact elements 118 and 114 of microswitch 106 in abutting relationship thereby actuating microswitch 106 to complete an electronic circuit (not shown) which places the associated dictation equipment in the playback mode.

In like manner, when yoke **26** is pivoted into the position shown in FIG. **9**, the washer **128** as it pivots into contact with extension **122** moves the contact arm **112** downwardly so that contact element **120** abuts contact element **116** actuating the microswitch **106** to complete an electronic circuit (not shown) to place the associated dictation equipment in a back space or tape reverse mode.

While the screw **130** and bracket **132** are carried by slide **44,** the spacing **124** between the head of the screw **126** and the washer **128** is sufficient to provide a clearance so that when the slide **44** is moved laterally, to actuate the associated dictation equipment to the dictate mode, the contact arm **112** is not disturbed precluding actuation of the playback or reverse mode. In like manner, even though the slide **44** is keyed to yoke **26,** so that pivoting the yoke **26** also pivots the slide about its longitudinal axis, the sliding fit between the slot **96** in slide **44** and the extension **94** of contact arm **88** provides a sufficient clearance to preclude initiation of the dictate modes when the yoke pivots.

It is thus seen that the present invention provides a hand-held dictate and playback instrument which is provided with an actuating mechanism to control associated dictation equipment. The actuating mechanism comprises a conveniently mounted yoke assembly which may be readily actuated by the thumb of the hand in which the dictator holds the instrument with the mechanism being equally conveniently operated whether the instrument is held in the left or right-hand.

We claim:

1. A hand-held dictating and playback instrument comprising:

a housing provided with microphone and speaker means,

switch elements mounted within said housing adapted to actuate associated dictation equipment to selectively place said dictation equipment in one of three operating modes,

switch means mounted on said housing to actuate said switch elements.

said switch means comprising a yoke member pivotally mounted on said housing and pivotable from a first position wherein said switch means actuates said switch elements to place said dictation equipment in a first operating mode through a second neutral position to a third position wherein said switch means actuates said switch elements to place said dictation equipment in a second operating mode,

said switch means further including a single actuating means provided with a contact segment on opposed sides of said housing with each said contact segment being slidably disposed with respect to said housing and said yoke member, each said contact segment being movable from a first neutral position to a second position wherein said switch means actuates said switch elements to place said dictation equipment in a third operating mode, and

wherein said yoke member comprises a generally U-shaped member, each of the legs of said U-shaped yoke including an aperture therethrough to receive said actuating means to pivotally connect said yoke to said housing.

2. A dictating and playback instrument as defined in claim **1** including means for resiliently biasing said yoke member and said actuating means to their respective neutral positions.

3. A dictating and playback instrument as defined in claim **1** wherein said actuating means comprises a unitary slide member slidably disposed through the legs of said yoke member and through said housing, said slide member further including means pivotally mounting said slide member in said housing.

4. A dicataing and playback instrument as defined in claim **3** wherein said apertures through said legs of said yoke are irregularly shaped and said slide member includes end segments having a cross-sectional configuration conforming to the irregularly shaped apertures in said yoke legs whereby said slide member is keyed to pivot with said yoke member.

5. A dictating and playback instrument as defined in claim **4** wherein said switch elements mounted within said housing includes a microswitch element mounted in said housing having a first and second spaced contact arm extending therefrom, a switch closing contact arm extending from said microswitch disposed between and spaced from said first and second contact arms, means on said slide member within said housing to engage said switch closing contact arm to move said switch closing contact arm into abutting relationship with said first contact arm to activate said microswitch when said yoke member is pivoted to said first position and into abutting relationship with said second contact arm to activate said microswitch when said yoke is pivoted into said third position.

6. A dictating and playback instrument as defined in claim **4** wherein said switch elements mounted within said housing includes a microswitch element mounted in said housing having a first and second spaced contact arm extending therefrom, a switch closing contact arm extending from said microswitch disposed between and spaced from said first and second contact arms, means on said slide member within said housing to engage said switch closing contact arm to move said switch closing contact arm into abutting relationship with said first and second contact arms to activate said microswitch when either of said slide member contact segments are moved.

7. A hand-held dictating and playback instrument comprising:

a housing having the general configuration of a telephone receiver provided with a microphone means at one end of said receiver and a speaker means at the other end of said receiver,

switch elements mounted within said receiver housing adapted to actuate associated dictation equipment to selectively place said dictation equipment in one of three operating modes,

a U-shaped yoke member including means to pivotally secure said yoke member to said receiver housing,

said yoke member having its bight segment disposed spaced from and overlying the rear portion of said receiver housing with its leg segments disposed spaced from and parallel to opposed lateral sides of said receiver housing,

said yoke member being pivotable from a first position wherein said yoke member actuates said switch elements to place said dictation equipment in a first operating mode through a second neutral position to a third position wherein said yoke mem-

ber actuates said switch elements to place said dictation equipment in a second operating mode,

said means to pivotally secure said yoke member to said receiver housing comprises a slide member extending through an aperture in each leg of said yoke member and through an aperture in each lateral side of said receiver housing,

said slide member being slidably disposed within said yoke member and receiver housing and including contact segments at each end thereof protruding from the legs of said yoke member with each said contact segment being movable inwardly toward said receiver housing thereby to move said slide member within said housing, and

said slide member including means mounted on said slide member to actuate said switch elements to place said dictation equipment in a third operating mode when either contact segment is moved inwardly toward said receiver housing.

8. A dictating and playback instrument as defined in claim **7** wherein said apertures in said leg members of said yoke have an irregular configuration and said slide member includes end segments thereof having a cross-sectional configuration conforming to the irregularly shaped apertures in said legs whereby said slide member is keyed to pivot with said yoke member.

9. A dictating and playback instrument as defined in claim **8** wherein said slide member includes a switch engaging member disposed within said receiver housing adapted to contact and close a microswitch member mounted within said receiver housing when said yoke member is pivoted to said first and third positions.

* * * * *