(12) INTERNATIONAL APPLICATION PUBLISHED UNDER THE PATENT COOPERATION TREATY (PCT)

(19) World Intellectual Property Organization
International Bureau

(43) International Publication Date
29 June 2006 (29.06.2006)

PCT

(10) International Publication Number
WO 2006/067519 A1

(51) International Patent Classification:
F01L 1/344 (2006.01)

(21) International Application Number:
PCT/GB2005/050199

(22) International Filing Date:
8 November 2005 (08.11.2005)

(25) Filing Language: English

(26) Publication Language: English

(30) Priority Data:
0428063.2 23 December 2004 (23.12.2004) GB

(71) Applicant *(for all designated States except US)*: **MECHADYNE PLC** [GB/GB]; Park Farm Estate, Kirtlington Oxfordshire OX5 3JQ (GB).

(72) Inventors; and

(75) Inventors/Applicants *(for US only)*: **METHLEY, Ian** [GB/GB]; 52 Churchill Way Long Hanborough, Witney Oxfordshire OX29 8JL (GB). **ASPINALL, Jonathan, Alexander** [GB/GB]; 7 Beckdale Close, Bicester OX OX26 2GT (GB).

(74) Agent: **MESSULAM, Alec, Moses**; 43-45 High Road, Bushey, Hertfordshire WD23 1EE (GB).

(81) Designated States *(unless otherwise indicated, for every kind of national protection available)*: AE, AG, AL, AM, AT, AU, AZ, BA, BB, BG, BR, BW, BY, BZ, CA, CH, CN, CO, CR, CU, CZ, DE, DK, DM, DZ, EC, EE, EG, ES, FI, GB, GD, GE, GH, GM, HR, HU, ID, IL, IN, IS, JP, KE, KG, KM, KN, KP, KR, KZ, LC, LK, LR, LS, LT, LU, LV, LY, MA, MD, MG, MK, MN, MW, MX, MZ, NA, NG, NI, NO, NZ, OM, PG, PH, PL, PT, RO, RU, SC, SD, SE, SG, SK, SL, SM, SY, TJ, TM, TN, TR, TT, TZ, UA, UG, US, UZ, VC, VN, YU, ZA, ZM, ZW.

(84) Designated States *(unless otherwise indicated, for every kind of regional protection available)*: ARIPO (BW, GH, GM, KE, LS, MW, MZ, NA, SD, SL, SZ, TZ, UG, ZM, ZW), Eurasian (AM, AZ, BY, KG, KZ, MD, RU, TJ, TM), European (AT, BE, BG, CH, CY, CZ, DE, DK, EE, ES, FI, FR, GB, GR, HU, IE, IS, IT, LT, LU, LV, MC, NL, PL, PT, RO, SE, SI, SK, TR), OAPI (BF, BJ, CF, CG, CI, CM, GA, GN, GQ, GW, ML, MR, NE, SN, TD, TG).

Declaration under Rule 4.17:

— *as to applicant's entitlement to apply for and be granted a patent (Rule 4.17(ii))*

Published:

— *with international search report*

For two-letter codes and other abbreviations, refer to the "Guidance Notes on Codes and Abbreviations" appearing at the beginning of each regular issue of the PCT Gazette.

(54) **Title:** VANE-TYPE PHASER

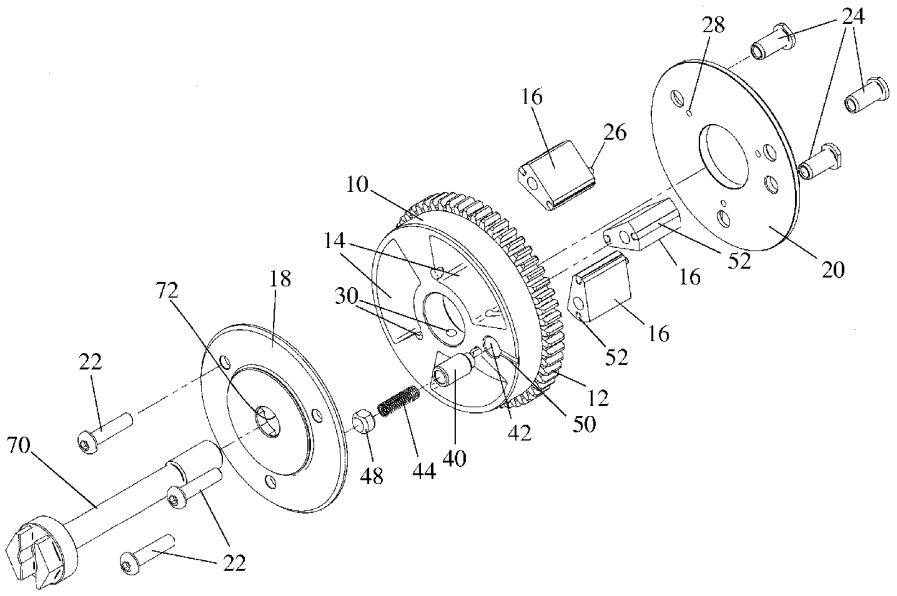

(57) **Abstract:** In a vane-type phaser comprising a drive member and a driven member, a first of the members comprises a disc (10) with at least one arcuate cavity (14) that is open at both axial ends. The second member comprises two closure plates (18, 20) sealing off the axial ends of each cavity (14) of the first member (10) and at least one vane (16) formed separately from the closure plates (18, 20) which is movably received in a respective cavity (14) to divide the cavity into two variable volume working chambers. Each vane (16) is secured at both its axial ends to the two closure plates (18, 20).

WO 2006/067519 A1

VANE-TYPE PHASER

Field of the invention

The present invention relates to a vane-type phaser for enabling the phase of rotation an engine camshaft to be varied in relation to the phase of rotation of the engine crankshaft.

Background of the invention

A phaser, also termed a phase change mechanism, is a device used in engines to vary dynamically the instant, or phase angle, in the engine cycle when the intake and/or exhaust valves of the engine open and close. Such devices are known which are incorporated in the drive pulley of the camshaft and which comprise a drive member connected to the camshaft and a driven member connected to the crankshaft. The drive member normally rotates with and at the same speed as the driven member but when it is desired to change the phase of the camshaft, the two members are rotated relative to one another.

In a vane-type phaser, as described for example in EP 0799976, EP 0807747 and GB 2369175, the rotation of the drive member relative to the driven member is effected hydraulically. A vane movable with one of the two members is received in an arcuate cavity of the other member and divides the cavity into two variable volume working chambers. When a hydraulic pressure medium, usually engine oil, is prevented from entering into or being discharged from the working chambers, the drive and driven members rotate as one. On the other hand, when pressure medium is pumped into one chamber and discharged from the other, the members are rotated relative to one another to change the phase of the camshaft relative to the crankshaft.

Summary of the invention

According to the present invention, there is provided a phaser comprising a drive member and a driven member, wherein a first of the members comprises a disc with at least one arcuate cavity that is open at both axial ends, and the second member comprises two closure plates sealing off the axial ends of each cavity of the first member and at least one vane formed separately from the closure plates which is movably received in a respective cavity to divide the cavity into two variable volume working chambers, the vane being secured at both its axial ends to the two closure plates.

The vane-type phaser of the invention is advantageous in that it eliminates any variation in the clearance between the vane and the cavity as a result of relative axial movement of the two members. Furthermore, it simplifies assembly and reduces the number of components that need to be manufactured with close tolerances. In this respect, it is only necessary to ensure that axial length of the vanes matches the thickness of the disc in which the cavity is formed. As the vanes are secured at their opposite ends to the two closure plates, leakage at the axial ends of the vanes is entirely avoided and seals fitted to the radially inner and outer sides of the vanes can readily ensure an adequate seal between the vanes and the cavity walls. The large area of overlap between the closure plates and the axial end surfaces of the disc also minimises any leakage from between the two members.

While the invention can be used in a valve train which uses a one-piece camshaft in which all the cams are rotated in unison relative to the crankshaft, the phaser can readily be adapted to a two-part camshaft made up of concentric shafts that are rotatable relative to one another, each being connected to a different group of cams.

In a preferred embodiment of the invention suitable for use with such a two-part camshaft, the first member may be formed with a central bore having formations for coupling the first member for rotation with a tubular shaft. In this case, it is possible to form one of the closure plates with a central bore of a diameter at least equal to that of central bore of the first member and the other closure plate with a central bore of smaller diameter than the bore of the first member. This enables the second closure plate to be secured by means of an axially extending fastener to the axial end of a second shaft passing through the central bores of the first closure plate and the first member.

Alternatively, the first closure plate may have formations for coupling the second member for rotation with a tubular shaft. In this case, the first member can be formed with a bore smaller than that of the first closure plate. This enables the first member to be secured by means of an axially extending fastener to the axial end of a second shaft passing through the central bore of the first closure plate. The head of the fastener could be accessed through a clearance bore in the second closure plate.

The invention further provides a phaser as set forth above in combination with a camshaft assembly which comprises a tubular first shaft which concentrically surrounds and is rotatable relative to a second shaft, relative rotation of the two shafts causing selected cams of the camshaft to rotate relative to other cams of the camshaft, wherein each of the shafts of the camshaft assembly is connected for a rotation with a different respective one of the two members of the phaser.

In a hydraulically operated phaser, the phase of the camshaft cannot be controlled by the phaser until the available hydraulic pressure, for example from the engine lubricant pump, is sufficient to overcome the reaction

forces acting on the valve train. It is therefore further desirable for the phaser to comprise a locking pin disposed within the first member and spring biased to engage in a hole in the second member to lock the two members in a predetermined position relative to one another, the pin being retractable by the hydraulic pressure prevailing in the working chambers whereby the locking pin is automatically retracted to permit relative angular movement of the two members when the hydraulic pressure in the working chamber is sufficient to rotate the members relative to one another.

Brief description of the drawings

The invention will now be described further, by way of example, with reference to the accompanying drawings, in which:

Figure 1 is a perspective view of an assembled phaser of the invention,

Figure 2 is a front view of the phaser in Figure 1,

Figure 3 is a section along the line III-III in Figure 2,

Figure 4 is a section along the line IV-IV in Figure 3, and

Figure 5 is an exploded perspective view of the phaser of Figures 1 to 4.

Detailed description of the preferred embodiment

The phaser in the drawings comprises a driven member 10 which is in the form of a thick disc with gear teeth 12. The gear teeth 12 mesh with a gear or a toothed belt (not shown) driven by the engine crankshaft to rotate the camshaft at half the engine speed (in the case of a four-stroke engine). The phaser is intended to replace the drive pulley that would normally be mounted on the front end of a camshaft.

The disc 10 has three arcuate through cavities 14 each of which receives a respective radial vane 16. The vanes 16 are secured to two closure plates 18 and 20 which cover the axial ends of the cavities 14 to form within each cavity two closed hydraulic working chambers separated from one another by a movable wall constituted by the vane 16. The vanes 16 are axially clamped between the closure plates 18 and 20 by means of bolts 22 and nuts 24. To prevent the vanes from rotating about the axis of the bolt 22, an alignment pin 26 projects from the end of each vane 16 into a hole 28 in the end plate 20.

The axial length of the vanes 16 is machined to within a close tolerance to match the axial thickness of the disc 10. As a result, the flat faces of the closure plates 18 and 20 seal off the cavities 14 from one another while still allowing the vanes 16 to rotate within the cavities 14. The closure plates 18 and 20 constitute the drive member that is coupled to rotate the camshaft in a manner to be described in greater detail below. The two radial tips of each vane 16 receive seals 52, as shown in Figure 4, so that oil cannot flow between the working chambers past the vanes 16. Therefore, by supplying engine oil to the working chambers on the opposite sides of the vanes 16, the drive and driven members can be rotated relative to one another to vary the phase of the camshaft relative to the crankshaft.

A locking pin 40, which is received in an axially extending bore 42 in the disc 10, projects, as shown in Figure 3, into a blind bore in the closure plate 20 under the action of a spring 44. The pin 40 serves to lock the drive and driven members for rotation with one another when the oil pressure is too low to overcome the resistance of the valve train. When the oil pressure rises, oil supplied to the right hand side of the locking pin 40, as viewed in Figure 3, retracts the pin 40 into the bore 42. The oil is

supplied through a radial passage 46 (see Figure 4) in the disc 10 connecting the bore 42 to one of the cavities. Air behind the pin 42 is expelled past an end cap 48. For this purpose, the end cap 48 has a flat and the space behind it has a radial vent passage 50.

The illustrated phaser is intended to be fitted to a two-part camshaft shown schematically in Figure 3 as comprising an inner shaft 60 and a tubular outer shaft 62. The outer shaft 62 has a threaded end 64 engageable with an internal screw thread 66 formed in the disc 10. The inner shaft 60 on the other hand has an internal thread 68 that is engaged by the thread of a bolt 70 that passes through an axial bore 72 in the closure plate 18 and acts the clamp the closure plate 18 against the axial end of the shaft 60. In this way the shaft 62 rotates with the driven member 10 and the shaft 60 rotates with the drive member that includes the closure plates 18 and 20. Each of the shafts 60 and 62 is fast in rotation with a different group of cams so that the phaser will act to alter the phase of some cams relative to the crankshaft while other cams are always rotated in the same phase relative to the crankshaft.

To effect a phase change, oil is supplied to the different working chambers through passages in the camshaft (not shown). One passage in the camshaft communicates with angled bores 30 in the disc 10, shown in Figures 3 and 5, that lead to the working chambers on one side of the vanes 16. The working chambers on the opposite sides of the vanes 16 communicate through radial grooves 74 formed in the closure plate 18 with a small cavity defined by the annulus of the axial bore 72 that surrounds the bolt 70.

An important advantage presented by the illustrated phaser is that the disc 10 is firmly located between the two closure plates 18 and 20 and cannot move axially relative to them. The clearance between the drive and driven members is

therefore fixed and does not vary with the axial loading on the phaser. Furthermore, only few surfaces need to be manufactured to exacting standards, thereby offering a considerable cost saving. The fact that the design of the phaser offers convenient locations to establish a coupling between the camshaft and both the drive and the driven members of the phaser makes it suitable not only for solid camshafts but also for two-part camshafts, as described.

CLAIMS

1. A phaser comprising a drive member and a driven member, wherein a first of the members comprises a disc (10) with at least one arcuate cavity (14) that is open at both axial ends, and the second member comprises two closure plates (18,20) sealing off the axial ends of each cavity (14) of the first member (10) and at least one vane (16) formed separately from the closure plates (18,20) which is movably received in a respective cavity (14) to divide the cavity into two variable volume working chambers, the vane (16) being secured at both its axial ends to the two closure plates (18,20).

2. A phaser as claimed in claim 1, wherein the first member is formed with a central bore having formations for coupling the first member for rotation with a shaft.

3. A phaser as claimed in claim 2, wherein one of the closure plates is formed with a central bore of a diameter at least equal to that of central bore of the first member and the other closure plate is formed with a central bore of smaller diameter than the bore of the first member so as to enable the second closure plate to be secured by means of an axially extending fastener to the axial end of a shaft passing through the central bores of the first closure plate and the first member.

4. A phaser as claimed in claim 1, wherein one of the closure plates is formed with a central bore having formations for coupling the second member for rotation with a shaft.

5. A phaser as claimed in claim 3, wherein the first member is formed with a central bore of smaller diameter than the bore of at least one of the closure plates so as to enable the first member to be secured by means of an axially

extending fastener to the axial end of a shaft passing through the central bores of the first closure plate.

6. A phaser as claimed in any preceding claim, further comprising a locking pin (40) disposed within the first member and spring biased to engage in a hole in the second member to lock the two members in a predetermined position relative to one another, the pin being retractable by the hydraulic pressure prevailing in the working chambers whereby the locking pin is automatically retracted to permit relative angular movement of the two members when the hydraulic pressure in the working chamber is sufficient to rotate the members relative to one another.

7. A phaser as claimed in any preceding claim in combination with a camshaft assembly comprising a tubular first shaft which concentrically surrounds and is rotatable relative to a second shaft, relative rotation of the two shafts causing selected cams of the camshaft to rotate relative to other cams of the camshaft, wherein each of the shafts of the camshaft assembly is connected for a rotation with a different respective one of the two members of the phaser.

8. A combination as claimed in claim 8, wherein the hollow second shaft of the camshaft is coupled for rotation with the first member of the phaser and the first shaft is coupled for rotation with the second member.

9. A combination as claimed in claim 8, wherein the hollow second shaft of the camshaft is coupled for rotation with the second member of the phaser and the first shaft is coupled for rotation with the first member.

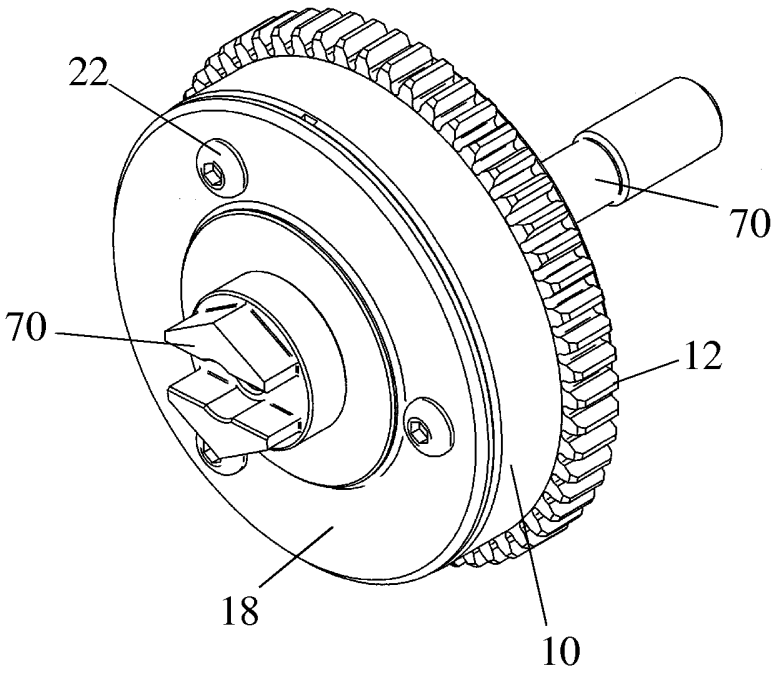

Fig. 1

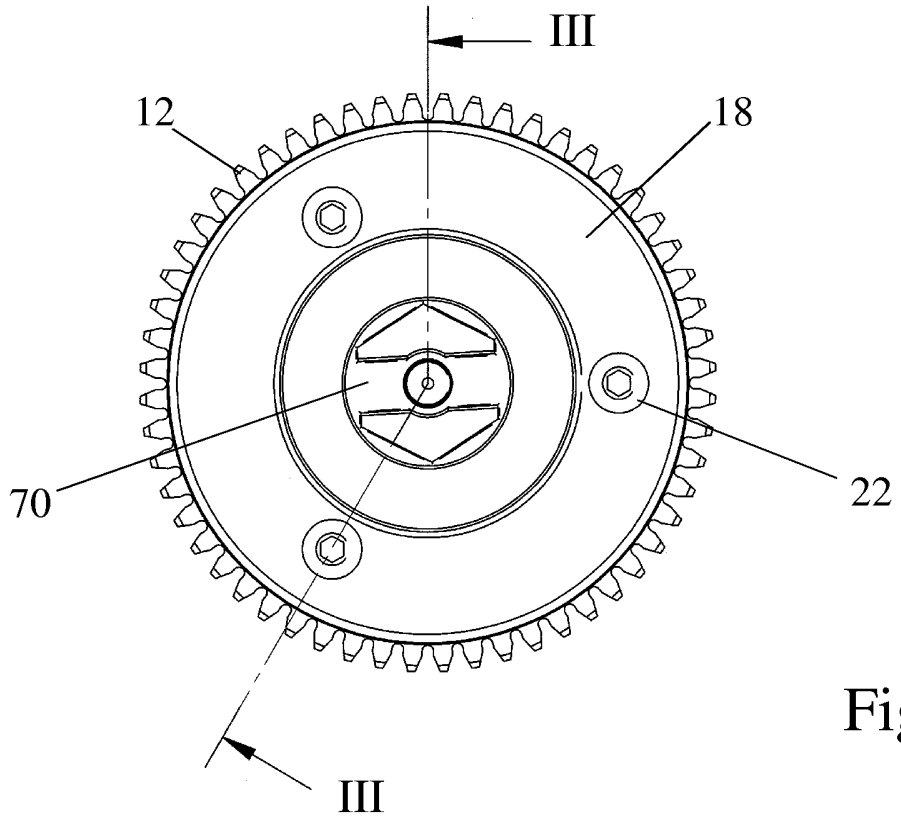

Fig. 2

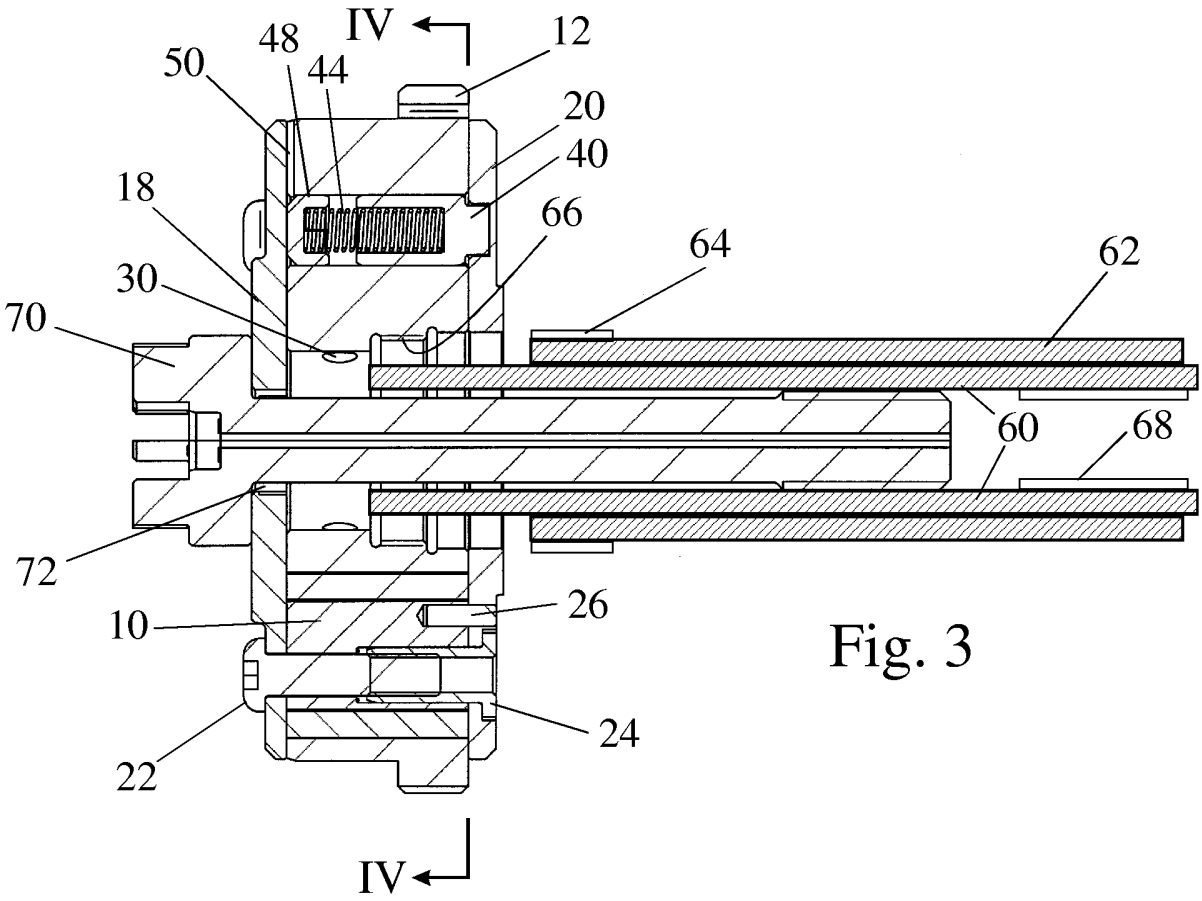
IV
48
50
44
12
20
40
18
66
64
62
30
70
60
68
72
26
10
24
22
IV

Fig. 3

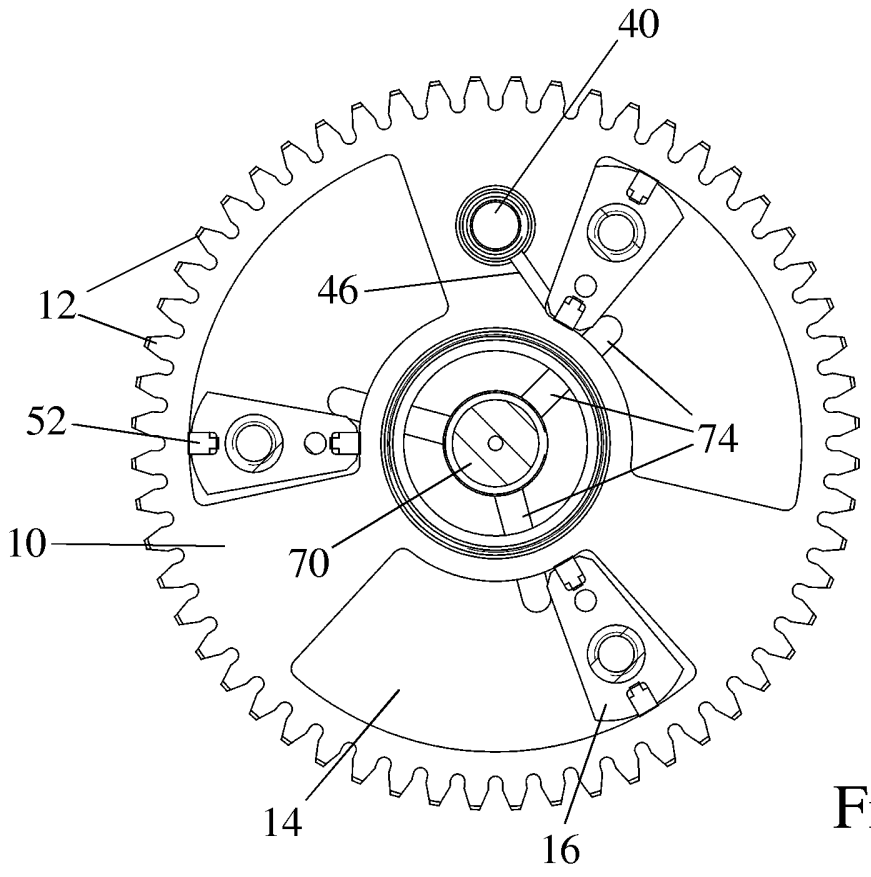
40
12
46
52
74
10
70
14
16

Fig. 4

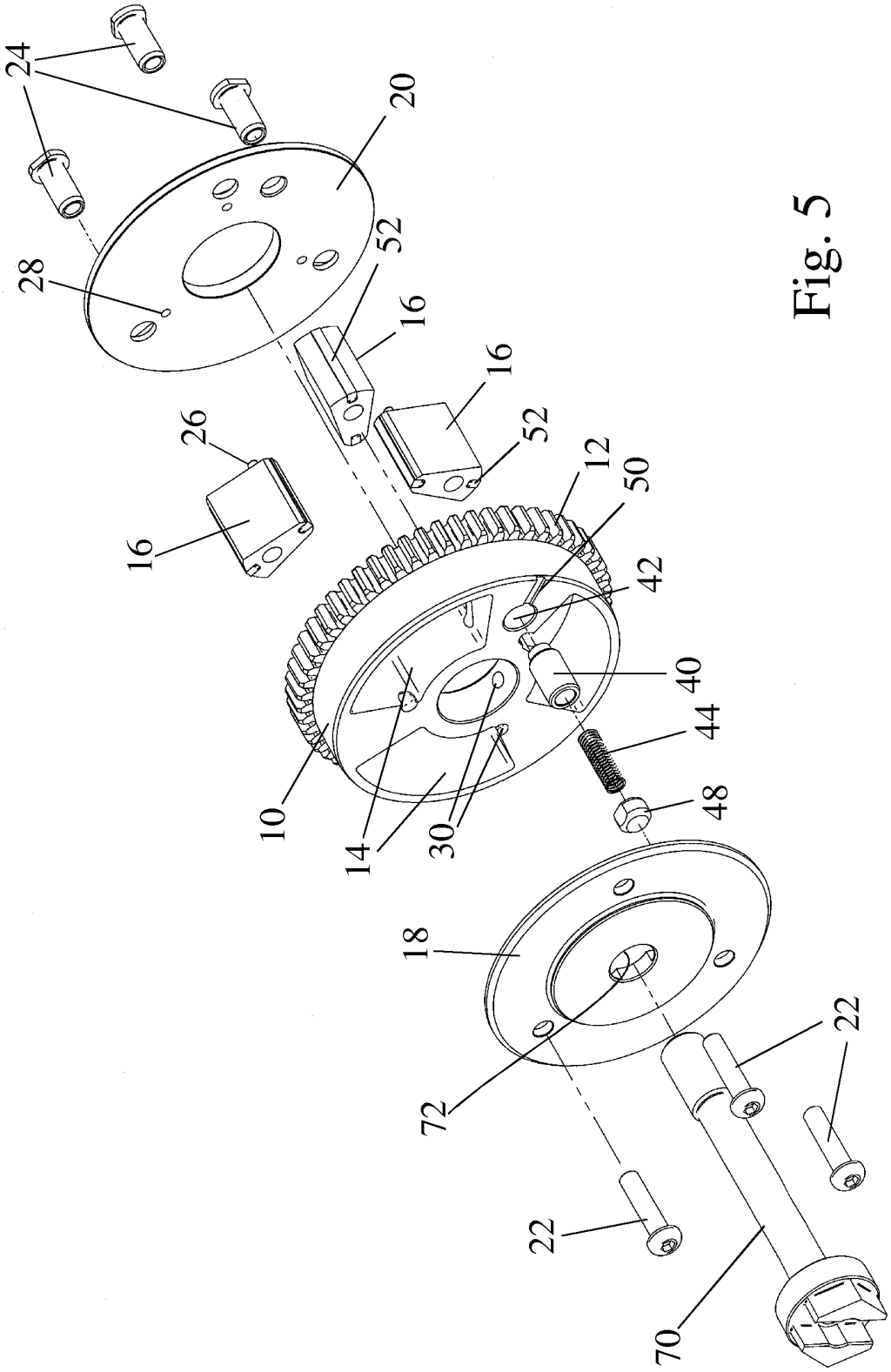

Fig. 5

INTERNATIONAL SEARCH REPORT

International application No
PCT/GB2005/050199

A. CLASSIFICATION OF SUBJECT MATTER
F01L1/344

According to International Patent Classification (IPC) or to both national classification and IPC

B. FIELDS SEARCHED

Minimum documentation searched (classification system followed by classification symbols)
F01L

Documentation searched other than minimum documentation to the extent that such documents are included in the fields searched

Electronic data base consulted during the international search (name of data base and, where practical, search terms used)
EPO-Internal

C. DOCUMENTS CONSIDERED TO BE RELEVANT

Category*	Citation of document, with indication, where appropriate, of the relevant passages	Relevant to claim No.
X	US 6 669 567 B1 (SCHEIDT MARTIN ET AL) 30 December 2003 (2003-12-30) abstract figures 5-9	1,2,4,6
X	US 6 481 401 B1 (SCHAEFER JENS) 19 November 2002 (2002-11-19) abstract figures 1-3	1,2,4,6
A	US 2001/017116 A1 (EGUCHI KATSUHIKO) 30 August 2001 (2001-08-30) the whole document	1-9
A	US 6 336 433 B1 (ANTON HUBER ET AL) 8 January 2002 (2002-01-08) the whole document	1-9

-/--

[X] Further documents are listed in the continuation of Box C.

[X] See patent family annex.

* Special categories of cited documents :

"A" document defining the general state of the art which is not considered to be of particular relevance

"E" earlier document but published on or after the international filing date

"L" document which may throw doubts on priority claim(s) or which is cited to establish the publication date of another citation or other special reason (as specified)

"O" document referring to an oral disclosure, use, exhibition or other means

"P" document published prior to the international filing date but later than the priority date claimed

"T" later document published after the international filing date or priority date and not in conflict with the application but cited to understand the principle or theory underlying the invention

"X" document of particular relevance; the claimed invention cannot be considered novel or cannot be considered to involve an inventive step when the document is taken alone

"Y" document of particular relevance; the claimed invention cannot be considered to involve an inventive step when the document is combined with one or more other such documents, such combination being obvious to a person skilled in the art.

"&" document member of the same patent family

Date of the actual completion of the international search	Date of mailing of the international search report
31 January 2006	08/02/2006

Name and mailing address of the ISA/	Authorized officer
European Patent Office, P.B. 5818 Patentlaan 2 NL – 2280 HV Rijswijk Tel. (+31–70) 340–2040, Tx. 31 651 epo nl, Fax: (+31–70) 340–3016	Paulson, B

INTERNATIONAL SEARCH REPORT

International application No
PCT/GB2005/050199

C(Continuation). DOCUMENTS CONSIDERED TO BE RELEVANT

Category*	Citation of document, with indication, where appropriate, of the relevant passages	Relevant to claim No.
A	US 4 091 776 A (CLEMENS ET AL) 30 May 1978 (1978-05-30) the whole document -----	1-9

INTERNATIONAL SEARCH REPORT

International application No
PCT/GB2005/050199

Patent document cited in search report		Publication date	Patent family member(s)		Publication date
US 6669567	B1	30-12-2003	DE	19951390 A1	03-05-2001
			WO	0131174 A1	03-05-2001
US 6481401	B1	19-11-2002	DE	10020119 A1	25-10-2001
US 2001017116	A1	30-08-2001	NONE		
US 6336433	B1	08-01-2002	DE	19916675 A1	30-11-2000
			WO	0061920 A1	19-10-2000
			EP	1088154 A1	04-04-2001
			JP	2002541380 T	03-12-2002
US 4091776	A	30-05-1978	NONE		