United States Patent [19]

Zusmanovich

[11] **3,808,832**

[45] **May 7, 1974**

[54] AIR CONDITIONING INSTALLATION

[76] Inventor: **Lev Markovich Zusmanovich,** ulitsa Dmitria Ulyanova, 4/34, korpus B, kv. 284, Moscow, U.S.S.R.

[22] Filed: **Oct. 16, 1972**

[21] Appl. No.: **297,904**

Related U.S. Application Data

[62] Division of Ser. No. 131,928, April 7, 1971.

[52] **U.S. Cl.** **62/309,** 62/95, 62/121, 62/314

[51] **Int. Cl.** **F25d 17/04**

[58] **Field of Search** 62/95, 121, 309, 310, 314

[56] **References Cited**

UNITED STATES PATENTS

2,069,359	2/1937	Dudley	62/309
2,162,158	6/1939	Crey	62/121
3,718,008	2/1973	Zusmanovich	62/309

Primary Examiner—William J. Wye

Attorney, Agent, or Firm—Waters, Roditi, Schwartz & Nissen

[57] **ABSTRACT**

An installation for conditioning air in an associated space, comprising at least two pairs of heat exchangers, each such pair including a surface heat exchangers and a mixing one, the second (in the direction of the flow of the air being treated through the apparatus) pair of heat exchangers communicating through the surface heat exchanger of the first pair with the conduit through which ambient air to be treated by the apparatus is supplied, for this air, after its having been cooled in the last-mentioned heat exchanger, to be directed for still deeper cooling into the surface heat exchanger and the mixing heat exchanger of the second pair.

1 Claim, 8 Drawing Figures

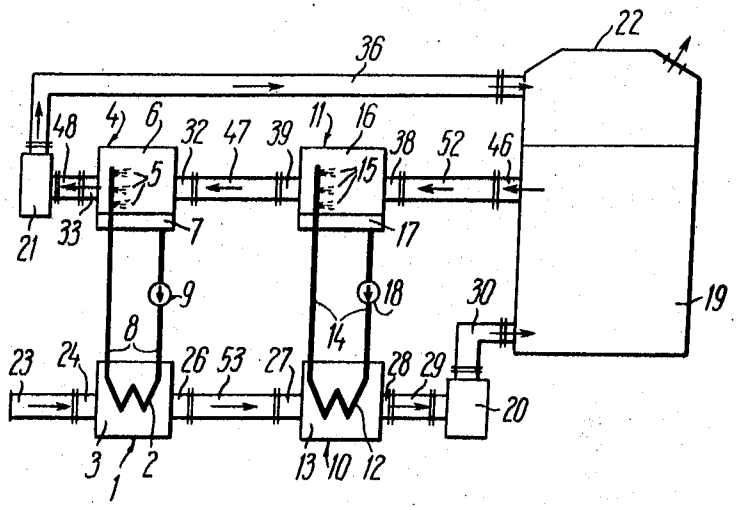

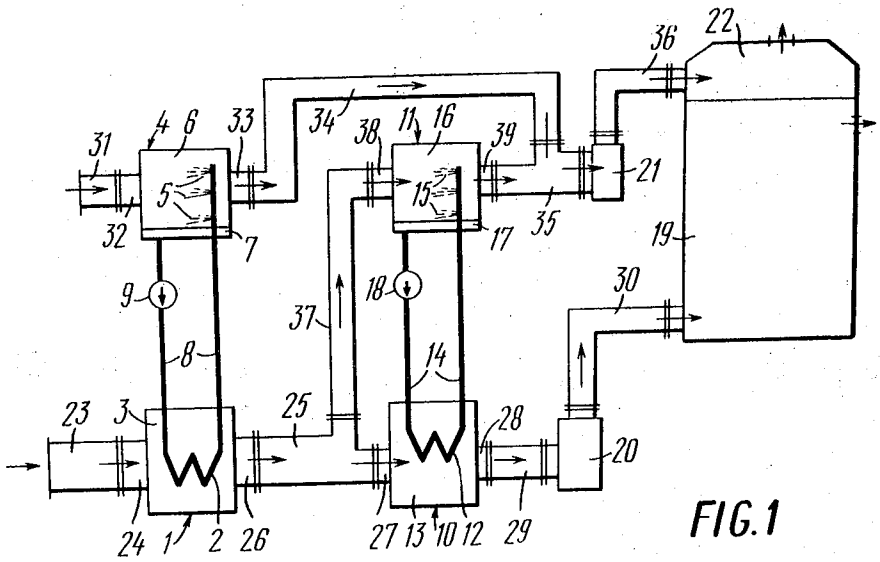
22
36
34
4
6
33
11
16
38
39
31
5
15
21
32
7
17
35
19
9
18
30
37
8
14
23
3
25
28
20
24
1
2
26
27
13
10
12
29

FIG. 1

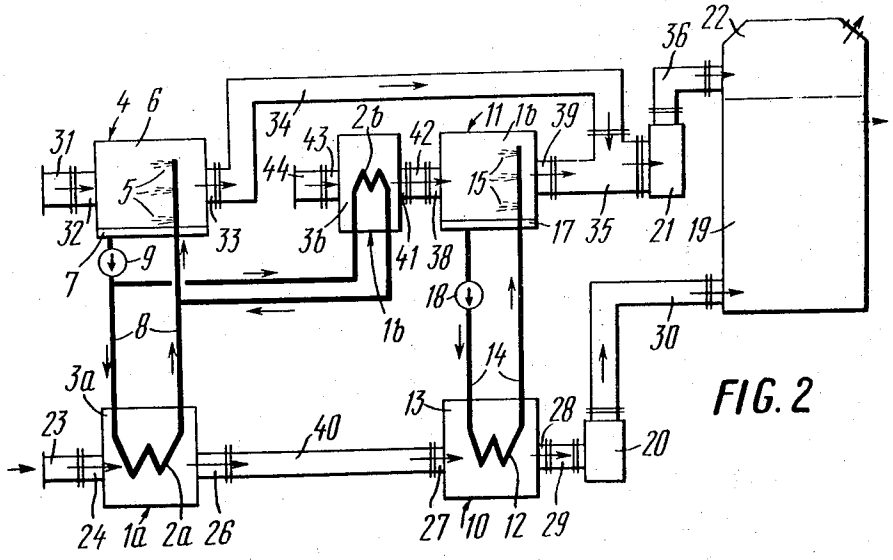
22
36
4
6
34
2b
11
1b
39
31
43
42
44
5
15
32
33
3b
41
38
17
35
21
19
7
9
18
1b
8
30
3a
14
13
28
23
40
20
24
1a
2a
26
27
10
12
29

FIG. 2

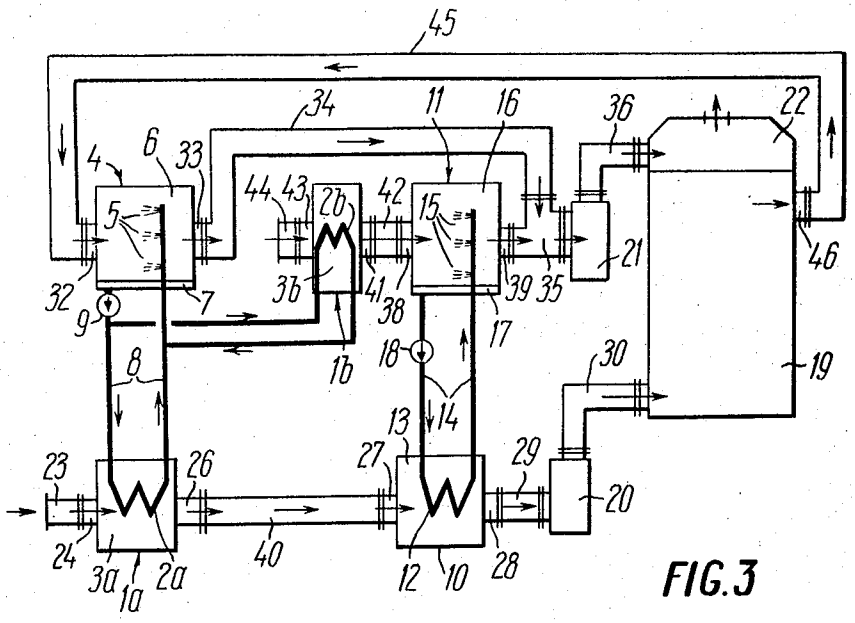
45
34
11
16
36
22
4
6
33
44
43
2b
42
15
5
21
46
32
9
7
3b
41
38
39
35
17
1b
18
30
19
8
13
14
23
26
27
29
20
24
3a
1a
2a
40
12
10
28

FIG.3

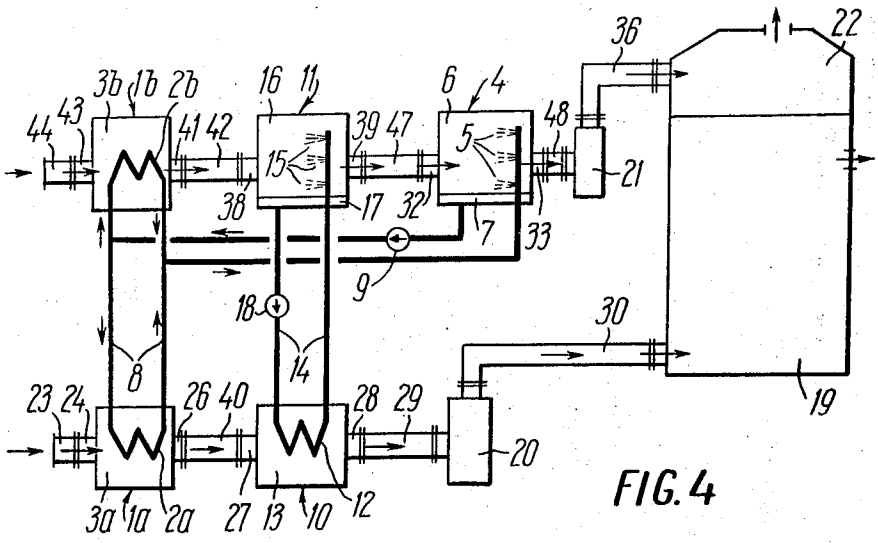
36
22
3b
1b
2b
16
11
6
4
44
43
41
42
39
47
48
5
15
21
38
17
32
7
33
9
18
30
19
8
14
23
24
26
40
28
29
20
3a
1a
2a
27
13
10
12

FIG.4

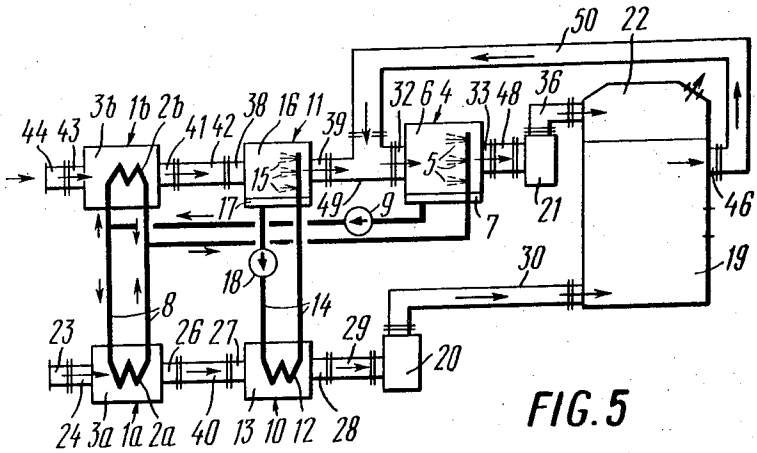
50
22
3b 1b 2b
44 43
41 42
38 16 11
39
32 6 4
33 48
36
15
5
49
9
7
21
46
17
18
30
19
8
14
23
26 27
29
20
24 3a 1a 2a 40 13 10 12 28

FIG. 5

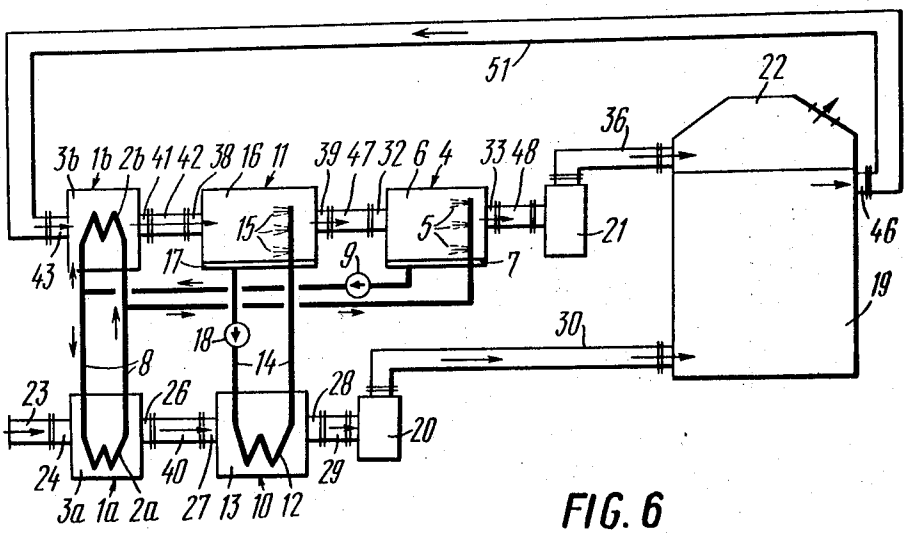
51
22
36
3b 1b 2b 41 42 38 16 11
39 47 32 6 4
33 48
15
5
21
46
43
17
9
7
19
18
30
8
14
23
26
28
20
24
40
29
3a 1a 2a 27 13 10 12

FIG. 6

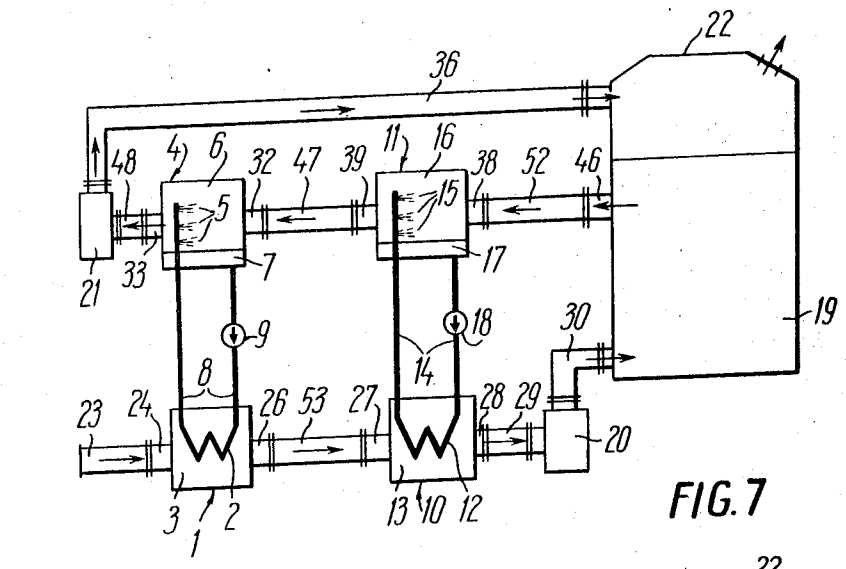
22
36
48
4
6
32
47
39
11
16
38
52
46
5
15
21
33
7
17
19
9
18
30
8
14
23
24
26
53
27
28
29
20
3
2
13
10
12
1

FIG. 7

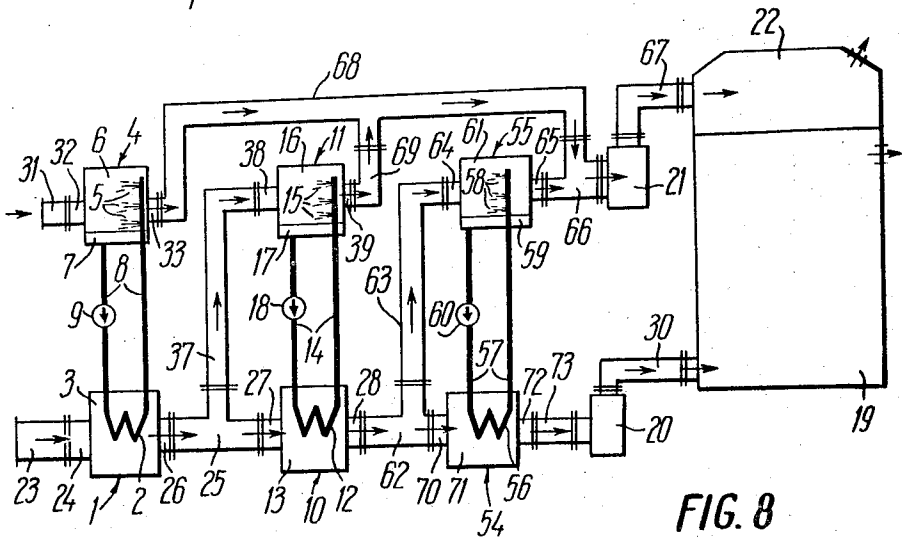
22
68
67
31
32
6
4
38
16
11
69
64
61
55
65
5
15
58
21
33
39
59
66
7
8
17
63
9
18
14
60
30
37
57
3
27
28
72
73
20
19
23
24
1
2
26
25
13
10
12
62
70
71
56
54

FIG. 8

AIR CONDITIONING INSTALLATION

This application is a divisional application of Ser. No. 131,928; filed Apr. 7, 1971.

The present invention relates to ventilation techniques, and, more particularly, it relates to installations for treating air in order to obtain required characteristics thereof.

There is already known an installation performing two-stage evaporative cooling of air, including a surface-type heat exchanger into which the ambient air to be treated is supplied and a mixing heat exchanger where air is used for cooling water serving as the intermediate cooling agent in the aforesaid surface heat exchanger.

In this known installation the ambient air to be treated is first cooled in the surface heat exchanger wherein water serves as the cooling agent, this water being cooled in the mixing heat exchanger by an independent stream of ambient air, whereafter the air being treated is cooled still deeper by being humidified in an adiabatic air washing chamber disposed downstream of the surface heat exchanger in the direction of the flow of the being treated.

The degree to which the air is cooled in the surface heat exchanger of the known installation is insufficient. This creates a necessity of employing humidifying chambers operating according to the adiabatic cycle.

However, this additional cooling of the air being treated is accompanied by considerable humidification thereof. As a result, the assimilative capacity of the air being treated to absorb moisture is sharply reduced. Consequently, the relative humidity of the air in the space which is served by this known installation increases. This, in its turn, leads to this installation often being uncapable of providing required characteristics of the air, which characteristics are either necessary for carrying out certain production processes or are required for ensuring normal working and living conditions in offices, production rooms, living quarters, etc.

The above reasons have resulted in very limited practical employment of the known installations effecting two-stage evaporative cooling of the air. In the air conditioning techniques they are replaced by installations where additional cooling of the air is effected by refrigerating machines which are capable of cooling the air without any additional humidification thereof.

Air conditioning installations incorporating refrigerating machinery consume relatively great amounts of power, their maintenance is costly and complicated; they require for their operation devices and means for withdrawing heat from their condensers (cooling towers, evaporative condensers, air-cooled condensers, and so on).

It is an object of the present invention to provide an air conditioning installation which should be capable of stepping up the degree of the cooling of the air being treated without humidifying this air.

It is another object of the present invention to provide an air conditioning installation which should be capable of stepping up the degree of the cooling of the air being treated, without the use of refrigerating machines and other external artificial sources of cold supply.

These and other objects are attained in an apparatus for conditioning air in an associated space, comprising

a main surface heat exchanger having an air path and an air inlet conduit through which air to be conditioned is supplied into said air path, and a main mixing heat exchanger wherein air is used for cooling liquid serving as the intermediate coolant in said main surface heat exchanger. In accordance with the present invention, the installation further comprises at least one auxiliary surface heat exchanger and at least one auxiliary mixing heat exchanger having the respective air paths thereof communicating through air conduit means and through said air path of said main surface heat exchanger with said air inlet conduit of said air path of said main surface heat exchanger, for the air supplied into said axuiliary surface heat exchanger and into said auxiliary mixing heat exchanger to be the air precooled within said main surface heat exchanger, the liquid coolant path of said auxiliary mixing heat exchanger being connected through liquid coolant conduit means with the liquid coolant path of said auxiliary surface heat exchanger, said respective paths of said main mixing heat exchanger and of said auxiliary mixing heat exchanger communicating through air conduit means.

It is expedient for said main surface heat exchanger to include two sections, the air path of one of said two sections communicating with said air path of said auxiliary surface heat exchanger, the air path of the other one of said two sections communicating with said air path of said auxiliary mixing heat exchanger, the respective liquid coolant paths of said two sections being connected to each other.

The above structure of the installation embodying the present invention provides for the installation being more compact.

It is further expedient for the air outlet conduit of said air path of said auxiliary mixing heat exchanger to communicate with the air outlet conduit of said air path of said main mixing heat exchanger and for said air inlet conduit of said air path of said main mixing heat exchanger to communicate with a conduit for withdrawing air from said space associated with said air conditioning installation.

In this way the total volume of the air being treated, required for the operation of the main mixing heat exchanger, can be reduced.

According to another embodiment of the present invention, it is expedient for said air inlet conduit of said air path of said main mixing heat exchanger to communicate with the air outlet conduit of said air path of said auxiliary mixing heat exchanger.

In this way it becomes possible to sharply reduce the volume of the air being treated, required for the operation of the two mixing heat exchangers.

According to still another embodiment of the present invention, the air conduit means establishing communication between the respective air path of said auxiliary mixing heat exchanger and of said main mixing heat exchanger, through which air flows from the former into the latter, communicate with the air conduit for withdrawing the air from said space associated with said air conditioning installation.

In this way it becomes possible to reduce the total volume of the air being treated and to do without additional fan means for effecting re-circulation of the air from the associated space.

According to a further embodiment of the present invention, the air inlet conduit of said air path of said

abovementioned other section of said main surface heat exchanger, which communicates with said air path of said auxiliary mixing heat exchanger, communicates with the air conduit for withdrawing air from said space associated with said apparatus.

Thus, it becomes possible to eliminate completely the use of ambient air for the operation of the mixing heat exchangers and to do without an additional fan for recirculation of air from the associated space.

According to a still further embodiment of the present invention, said air inlet conduit of said air path of said auxiliary mixing heat exchanger can be directly connected to the conduit for withdrawing air from said space associated with said air conditioning installation.

The last-mentioned embodiment of the present invention makes it possible in certain cases to do without said other section of said main surface heat exchanger, i.e. without the section that is normally positioned upstream of said auxiliary mixing heat exchanger, such elimination being attained without the necessity of increasing the heat exchange surface of said one section of said main surface heat exchanger.

An apparatus embodying the present invention may incorporate several auxiliary surface heat exchangers and several auxiliary mixing heat exchangers.

In this way it becomes possible in certain cases to cool the ambient air to a temperature practically equal to the dew point of the air in the initial state thereof, such cooling has never been achieved in the prior art without the use of external artificial sources of cold supply.

Given below is a detailed description of several embodiments of the present invention, with reference being had to the accompanying drawings, wherein:

FIG. **1** shows schematically an air conditioning installation constructed in accordance with the present invention, including an auxiliary mixing heat exchanger and an auxiliary surface heat exchanger, into which ambient air pre-cooled in the main surface heat exchanger is supplied;

FIG. **2** shows a modification of the installation shown in FIG. **1**, wherein the main surface heat exchanger includes two sections;

FIG. **3** illustrates a modification of the installation shown in FIG. **2**, wherein the air inlet conduit of the main mixing heat exchanger is connected to the conduit for withdrawing air from the air-conditioned rooms;

FIG. **4** illustrates another modification of the installation shown in FIG. **2**, wherein the air inlet conduit of the main mixing heat exchanger is connected to the air outlet conduit of the additional mixing heat exchanger;

FIG. **5** illustrates still another modification of the installation shown in FIG. **2**, wherein the air conduit establishing communication between the air paths of the main and auxiliary mixing heat exchangers is connected to the conduit for withdrawing air from the air-conditioned rooms;

FIG. **6** illustrates a still further modification of the installation shown in FIG. **2**, wherein the air inlet conduit of that one of the two sections of the main surface heat exchanger, which has the air path thereof communicating with the air path of the auxiliary mixing heat exchanger, is connected to the conduit for withdrawing air from the air-conditioned rooms;

FIG. **7** illustrates a modification of the installation illustrated in FIG. **1**, wherein the air inlet conduit of the auxiliary mixing heat exchanger is directly connected to the conduit for withdrawing air from the air-conditioned rooms;

FIG. **8** shows a modification of the installation illustrated in FIG. **1**, including two auxiliary mixing heat exchangers and two auxiliary surface heat exchangers.

Referring now in particular to the appended drawings, there is shown in FIG. **1** an air conditioning installation incorporating a pair of main heat exchangers, i.e., a mixing one and a surface-type one, and a similar pair of auxiliary heat exchangers.

The main surface heat exchanger **1** is intended to effect cooling of the air being handled, the air being subsequently supplied into rooms where air conditioning is to be established, to be hereinafter referred to as "air-conditioned rooms." This heat exchanger is preferably of the gas-to-liquid kind, with the liquid cooling agent — cooling water — being supplied through the liquid conduits **2** thereof, these conduits being the internal space of its tubing, and with the air being cooled being directed through the gas conduits **3** thereof, these gas conduits being defined by the finned external surface of the tubing of the heat exchanger.

Alternatively, the main surface heat exchanger **1** can be of any other known structure wherein the air is cooled without varying the moisture content thereof and the cooling water, serving as the cooling agent, is simultaneously heated.

The water heated up in the main surface heat exchanger **1** is cooled down in the main mixing heat exchanger **4** which can be of the multi-nozzle type, this heat exchanger effecting direct contact between the water and the stream of air. The water heated up in the main surface heat exchanger **1** is sprayed by a plurality of spray nozzles **5** positioned in the air path **6** of this main mixing heat exchanger **4**, whereby the water is engaged a direct contact with the air flowing along this path **6**. The cooled water is collected in the bottom portion **7** of the heat exchanger **4** and is directed therefrom through the corresponding branch of a double-branch conduit **8** into the water path **2** of the main surface heat exchanger **1**. The other branch of the same water conduit **8** is used for pumping the water from the water path **2** of the main surface heat exchanger **1** toward the nozzles **5**.

Thus, the water path of the main mixing heat exchanger **4** includes the spray nozzles **5** and the water-collecting bottom portion **7** of the heat exchanger housing.

Alternatively, other known structures of mixing heat exchangers can be used as the main mixing heat exchanger **4**, e.g., foam-type heat exchangers, cooling towers, etc., provided they ensure direct contact of the water being cooled with the cooling gas.

The cooling agent — cooling water — is pumped through the double-branch water conduit **8** establishing communication between the water path of the main mixing heat exchanger **4** and that of the main surface heat exchanger **1** by the pump **9**. The pump **9** may be a centrifugal pump, a piston pump or any other liquid circulation means.

In order to effect further cooling of the air being treated without varying the moisture content thereof (i.e., without cooling the air by humidifying it in an adiabatic chamber), and also in order to eliminate the use

of refrigerating machines for further cooling of this air, the herein disclosed air conditioning installation includes an auxiliary surface heat exchanger **10** and an auxiliary mixing heat exchanger **11**.

The structure of the auxiliary surface heat exchanger **10** is preferably similar to that of the main gas-to-liquid surface heat exchanger **1**. The internal water path **12** of the heat exchanger **10** has cooling water pumped therethrough, while the air being treated flows through the gas path **13** of the heat exchanger **10**, after having been pre-cooled in the main surface heat exchanger **1**. The water heated up in the auxiliary surface heat exchanger **10** is supplied through the first branch of a double-branch conduit **14** into the auxiliary mixing heat exchanger **11**, to be cooled thereinside. In the last-mentioned heat exchanger the water is sprayed by spray nozzles **15** into the air path **16** of this heat exchanger, the air in this air path being a part of the pre-cooled in the main surface heat exchanger **1**. The water cooled within the auxiliary heat exchanger **11** is collected in the bottom portion **17** thereof, wherefrom it is directed along the other branch of the double-branch conduit **14**, under the action of a recirculation pump **18**, into the auxiliary surface heat exchanger **10**. Within the latter the now cooled water cools down the air being treated which is then directed into the air-conditioned rooms, while the water which is now again heated up by the heat withdrawn from the air is directed by the pump **18** to the spray nozzles **15**. It can be seen that the coordinated operation of the auxiliary surface heat exchanger **10** and the auxiliary mixing heat exchanger **11** which effects cooling of the water circulated through the heat exchanger **10** is similar to the coordinated operation of the main surface heat exchanger **1** and the main mixing heat exchanger **4**.

The flow of the ambient air being treated through the main surface heat exchanger **1** and the auxiliary surface heat exchanger **10**, as well as the supply of this air into the air-conditioned rooms **19** are effected by the action of an air fan **20**. Another air fan **21** drives the air through the main mixing heat exchanger **4** and the auxiliary mixing heat exchanger **11**, and also supplies the air which has been treated in the two last-mentioned heat exchangers (the air being humidified, but not adequately cooled) into the attic portion **22** of the air-contitioned rooms **19**, so as to reduce the total penetration of heat from outside into these rooms. In case the latter have no attic portion, this air is directed into the ambient atmosphere.

The respective directions of the flow of the air and the water in the installation illustrated in FIG. **1** and in the apparatus illustrated in the other ones of the appended drawings are indicated in these drawings by arrow lines.

Ambient air is introduced into the herein disclosed installation via corresponding air supply conduits. The air supply conduit **23** communicates with the air inlet conduit **24** of the air path **3** of the main surface heat exchanger **1**. The air conduit **25** establishes communication between the outlet conduit **26** of the air path **3** of the main surface heat exchanger **1** and the inlet conduit **27** of the air path **13** of the auxiliary surface heat exchanger **10**. In this way the air pre-cooled in the main surface heat exchanger **1** is supplied into the air path **13** of the auxiliary surface heat exchanger **10**. The air conduit **28** serves as the outlet of the air path **13** of the auxiliary surface heat exchanger **10** and communicates with an air conduit **29** through which the cooled air is supplied to the air fan **20**, the latter driving it through an air conduit **30** into the air-conditioned rooms **19**. An air supply conduit **31** communicates with the inlet conduit **32** of the air path **6** of the main mixing heat exchanger **4**. In this way air is introduced through the air conduit **32** into the air path **6** to withdraw heat from the water that is sprayed in the mixing heat exchanger **4**. The outlet conduit **33** of the air path **6** of the main mixing heat exchanger **4** communicates with an air conduit **34** which, in its turn, communicates with the inlet conduit **35** of the other air fan **21**. The latter directs air via an air conduit **36** either into the attic **22** or into ambient atmosphere.

An air conduit **37** establishes communication between the previously mentioned air conduit **25** and the inlet air conduit **38** of the air path **16** of the auxiliary mixing heat exchanger **11**, in which way a part of the air pre-cooled in the heat exchanger **1** is diverted into this air path **16**, to withdraw heat from the water that is sprayed in the heat exchanger **11**. An air conduit **39** is the outlet conduit of the air path **16** of this auxiliary mixing heat exchanger **11**; it communicates with the above-mentioned air conduit **35** through which the humidified air is supplied towards the fan **21** which directs it either into the attic **22** or into the ambient atmosphere.

Thus, the air conduits **37** and **25** establish communication between the air path **16** of the auxiliary mixing heat exchanger **11** and the air path **13** of the auxiliary surface heat exchanger **10**, and the inlet air conduit **24** of the air path **3** of the main surface heat exchanger **1**. Through these conduits **25** and **37** the ambient air (of which the moisture content has not been varied) pre-cooled in the main surface heat exchanger **1** finds its way into the air paths **13** and **16** of the auxiliary surface heat exchanger **10** and of the auxiliary mixing heat exchanger **11**, respectively.

The physical principles of the operation of the air conditioning installation schematically illustrated in FIG. **1** in summertime are, as follows.

The main surface heat exchanger **1** and the auxiliary surface heat exchanger **10** effect cooling of the ambient air without varying the moisture content thereof. Heat withdrawn from the ambient air being cooled is transferred to the intermediate liquid cooling agent, e.g., cooling water, the air not being in direct contact with this cooling agent. From the intermediate cooling agent (e.g., water) the main and auxiliary mixing heat exchangers **4** and **11**, respectively, re-direct heat to the air being treated, under the conditions of direct contact between the air and the cooling agent, this cooling liquid agent, i.e., water partly evaporating, and the heat of the evaporating water being transferred to the cooling ambient air.

In order to intensify the process of the cooling of the water and to make the temperature of the water below that of the water in the main mixing heat exchanger **4**, the auxiliary mixing heat exchanger **11** uses for its cooling agent adapted to withdraw heat from the water the ambient air pre-cooled in the main surface heat exchanger **1** (of which the moisture content has not been varied).

As the air is cooled without its moisture content being varied, its wet-bulb temperature is simultaneously lowered, the last-mentioned temperature being, as is known, the lowest temperature to which water

can be cooled as a result of its direct contact with the air. The wet-bulb temperature of the ambient air pre-cooled in the heat exchanger **1** will always be lower than the wet-bulb temperature of uncooled ambient air flowing into the main mixing heat exchanger **4.** Therefore, the water cooled in the auxiliary mixing heat exchanger **11** is bound to have its temperature substantially lower than that of the water cooled in the main mixing heat exchanger **4.**

Considering that the cooler water from the heat exchanger **11** is directed into the heat exchanger **10** into which is also directed the air pre-cooled in the heat exchanger **1,** we can see that the auxiliary heat exchanger **10** effects deep cooling of the ambient air without varying the moisture content thereof, to temperatures substantially lower than the wet-bulb temperature of the ambient air that has not been treated by the herein disclosed installation.

In this way there is attained the main object of the present invention, namely, that of creating an air conditioning plant which should step up the degree of the cooling of ambient air without humidifying the same, this cooling being achieved without the use of refrigerating machines and other artificial external sources of cold.

The air conditioning installation schematically shown in FIG. **1** is operated in the following way.

The ambient air to be treated is drawn into the main surface heat exchanger **1** where it is cooled without its moisture content being varied. Heat is withdrawn from this ambient air in the heat exchanger **1** by the water serving as the intermediate cooling agent, the water flowing along the water tubing, or path **2** of the heat exchanger **1.** This heated up water is pumped by the pump **9** through the respective branch of the conduit **8** into the main mixing heat exchanger **4,** to be sprayed therein. By engaging in direct contact with the ambient air flowing into the heat exchanger **4** via the conduits **31** and **32,** the water sprayed by the spray nozzles **5** is cooled down. This cooling of the water in the heat exchanger **4** is due to the water partly evaporating, the wet-bulb temperature of the air flowing into the heat exchanger **4** being always below the temperature of the water being sprayed. The now cooled water which has transferred part of its heat to the air in the heat exchanger **4** is re-directed by the pump **9** into the heat exchanger **1** for cooling the ambient air flowing therethrough. Having been heated up in the heat exchanger **1,** the water is again directed by the pump **9** into the heat exchanger **4,** to be sprayed and cooled therein. Thus, there is maintained continuous circulation of the water through the heat exchangers **1** and **4,** with transfer of the heat withdrawn from the ambient air in the heat exchanger **1** to the ambient air flowing through the heat exchanger **4.**

The joint operation of the auxiliary surface heat exchanger **10** with the auxiliary mixing heat exchanger **11** is quite similar to the joint operation of the heat exchangers **1** and **4,** the only difference being in that the heat withdrawn from the air flowing through the heat exchanger **10** is transferred to the ambient air that has been pre-cooled in the main surface heat exchanger **1.**

Thus, the general rule is that the air cooled in the main and auxiliary surface heat exchangers should preferably be the ambient air which, after having been cooled in the two last-mentioned heat exchangers, is directed into the air-conditioned rooms **19.**

However, it is not only the ambient air that can be used for withdrawing the heat from the water sprayed in the main mixing heat exchanger **4;** in certain cases it may be either air re-circulated from the air-conditioned rooms **19,** or even the air already used in the additional mixing heat exchanger **11.**

This is possible on account of the wet-bulb temperature of the air re-circulated from the air-conditioned rooms **19** and that of the air already used in the additional mixing heat exchanger **11** being, as a rule, not higher than the wet-bulb temperature of the untreated ambient air which is directed to cool down the water in the main mixing heat exchanger **4.**

The ambient air cooled first in the main surface heat exchanger **1** and then in the additional surface heat exchanger **10,** its humidity not having been varied, is supplied into the air-conditioned rooms **19,** where this air is used for maintaining therein air parameters that are required either for production reasons, or for the reasons of the comfort of the inhabitants of the rooms.

The air that has received the heat from the water in the mixing heat exchangers **4** and **11** is driven by the fan **21** into the attic portion **22** of the rooms **19,** where it can be utilized on account of its being although humid, but at a sufficiently lowered temperature to relieve at least a part of the heat load of the building including the rooms **19.** In case there is no such attic portion, this air is directed into the ambient atmosphere.

The air conditioning installation illustrated in FIG. **2** of the appended drawings is a modification of the installation described hereinabove and illustrated in FIG. **1.** The functioning of the units and individual parts of the installation illustrated in FIG. **2,** as well as the operational principle and the physical foundations thereof are the same. Besides, the numerals indicating similar units and parts in FIG. **2** and in FIG. **1** are the same in the cases when the functioning of these units and parts in the two respective modifications is exactly the same. The said condition applies to every one of the drawings appended to the present specification.

The difference between the installation illustrated in FIG. **2** and the modification previously described is in that the main surface heat exchanger includes two stages, or sections **1***a* and **2***b*, respectively. The air path **3***a* of the first section **1***a* is connected via conduits **26, 40** and **27** to the air path **13** of the auxiliary surface heat exchanger **10.** The air path **3***b* of the second section **1***b* communicates via conduits **41, 42** and **38** with the air path **16** of the auxiliary mixing heat exchanger **11.**

The inlet air conduit **43** of the path **3***b* of the second section **1***b* of the main surface heat exchanger is connected to an air supply conduit **44** through which the ambient air flows toward this second section **1***b*. The outlet air conduit **41** of the air path **3***b* is connected through the conduit **42** to the inlet conduit **38** of the air path **16** of the additional mixing heat exchanger **11,** in which way the air pre-cooled in the heat exchange **1***b* is supplied into the air path **16.**

The access of the ambient air to be cooled into the plant illustrated in FIG. **2** is effected through two conduits — **23** and **44.** This structural feature of the installation enables the latter to be more compact, because here the heat exchangers **1***b* and **11** can be situated at

a considerable distance from the heat exchanger 1*a*, whereas in the modification previously described and illustrated in FIG. 1 any considerable remoteness of the heat exchanger 11 from the heat exchanger 1 results in the conduit 37 being relatively long, which cannot be always attained in the actual construction of the installation.

It should be noted that the water serving as the intermediate cooling agent in the sections 1*a* and 1*b* is cooled solely in the main mixing heat exchanger 4. Therefore, the respective water paths 2*a* and 2*b* of these sections and the water path 5, 7 of the main mixing heat exchanger communicate with one another within a single re-circulation system including the conduits 8.

The air conditioning installation illustrated in FIG. 3 is a modification of the installation illustrated in FIG. 2. The installation shown in FIG. 3, differs from the one previously described in that the inlet air conduit of the air path 6 of the main mixing heat exchanger 4 is connected via a conduit 45 with a conduit 46 through which air is dithdrawn from the air-conditioned rooms.

When installation illustrated in FIG. 1 was described here inabove, it was stated that the air used for cooling the water sprayed by the spray nozzles 5 in the main fixing heat exchanger 4 should have the wet-bulb temperature thereof not above that of the air supplied via the conduits 23 and 44 into the main surface heat exchanger 1. In the areas with hot, dry climate the air in the air-conditioned rooms will usually have its wet-bulb temperature lower than that of the ambient air. Consequently, it is quite profitable to use the air re-circulated from the air-conditioned rooms for cooling the water in the main mixing heat exchanger 4, as is illustrated in FIG. 3. The use of the re-circulation air instead of the ambient air in the last described case provides for cutting down the total amount of the ambient ait treated by the installation, whereby the operation of the latter becomes more economical.

Illustrated in FIG. 4 of the appended drawings is an air conditioning installation which is a further modification of the installations illustrated, respectively, in FIGS. 1 and 2. This plant differs from the two previously described ones in that the inlet air conduit 32 of the air path 6 of the main direct contact heat exchanger 4 thereof communicates via a conduit 47 with the outlet conduit 39 of the air path 16 of the auxiliary mixing heat exchanger 11. The air that has passed through the air path 16 of the heat exchanger 16 has its wet-bulb temperature not higher than that of the ambient air and not higher than that of the air coming from the air-conditioned rooms. Therefore, it is quite advisable to utilize the air flowing from the additional heat exchanger 11 in the main mixing heat exchanger 4, as is illustrated in FIG. 4. The air coming from the heat exchanger 4 is directed via the conduits 33 and 48 into the fan 21 which forwards it either into the attic portion 22 via the conduit 36, or into the ambient atmosphere.

The above specified characteristic feature of the plant illustrated in FIG. 4 makes it possible to sharply reduce the total volume of the air treated by the installation, and thus to render the latter more economical.

The air-conditioning installation illustrated in FIG. 5 is a modification of the installation previously described in connection with the FIG. 4.

The difference between the installation illustrated in FIG. 5 and the one previously described is that here the main mixing heat exchanger 4 uses for cooling the water sprayed thereinside not only the air that has passed through the air path 16 of the additional mixing heat exchanger 11 (as was shown in FIG. 4) but also partly the re-circulation air drawn from the air-conditioned rooms 19. This is obtained by establishing communication between the air conduit 49 connecting the respective air paths 16 and 6 of the auxiliary direct contact heat exchanger 11 and of the main one 4 with the air outlet conduit 46 of the air-conditioned rooms 19 via a conduit 50.

In this way it becomes possible to reduce the volume of the air treated by the installation and to do without an additional fan for re-circulation of the air from the rooms 19.

FIG. 6 illustrates an air conditioning plant which is a still further modification of the previously described installation shown in FIG. 5.

The installation illustrated in FIG. 6 differs from the one previously described in that here the air inlet conduit 43 of the air path 3b of the second section 1b of the main surface heat exchanger communicates via an air conduit 51 with the air outlet conduit 46 of the air-conditioned rooms 19.

It is expedient to use the installation illustrated in FIG. 6 in the areas with hot, dry climate, where the wet-bulb temperature of the air in the air-conditioned rooms is bound to be substantially lower than that of the ambient air.

The last-described modification of the herein disclosed installation makes it possible to eliminate completely the use of the ambient air for the operation of the mixing heat exchangers 11 and 4 and also to do without an additional fan for re-circulation of the air from the rooms 19.

Illustrated in FIG. 7 is an air conditioning installation which is a modification of the installations described hereinabove in connection with the drawings, FIGS. 4, 5 and 6.

Like these previously described installations, the modification shown in FIG. 7 uses the air pre-cooled in the main surface heat exchanger 1 to intensify the cooling of the water in the auxiliary mixing heat exchanger 11 and to lower the temperature of the air being treated, by directing this pre-cooled air into the air paths of the auxiliary surface heat exchanger 10 and of the additional mixing heat exchanger 11.

The installation illustrated in FIG. 7 differs from the installations described hereinabove in connection with FIGS. 2 and 4 in that here the air pre-cooled in the main surface heat exchanger 1 is supplied into the auxiliary mixing heat exchanger 11 via an air conduit 52, after having passed successively through the auxiliary surface heat exchanger 10 and the air-conditioned rooms 19.

Besides, in this modification the main surface heat exchanger 1 has only one stage, or section, similarly to the installation illustrated in FIG. 1. However, in this case the outlet air conduit 26 of the air path 3 of the main surface heat exchanger 1 is connected via an air conduit 53 to the air inlet conduit 27 of the air path 13 of the auxiliary surface heat exchanger 10.

In the areas with hot, dry climate, where the wet-bulb temperature of the air in the air-conditioned rooms is about the same as that of the air pre-cooled in the main surface heat exchanger **1**, the principal structure of the air conditioning installation shown in FIG. **7** makes it possible to do without: first, the incorporation of the second section of the main surface heat exchanger **1**; second, the use of the ambient air for the operation of the mixing heat exchangers; third, the incorporation of an individual additional fan for withdrawing the used-up air from the air-conditioned rooms.

FIG. **8** of the appended drawings illustrates an air conditioning illustration which is a further modification of the installation described hereinabove in connection with FIG. **1.**

This last-described modification includes two auxiliary surface heat exchangers **10** and **54** and two auxiliary mixing heat exchangers **11** and **55.**

The principle of the joint operation of the additional couple including the auxiliary surface heat exchanger **54** and the auxiliary mixing heat exchanger **55** is identical to that of the joint operation of the main surface heat exchangers — **1** and **4,** and auxiliary heat exchangers **10** and **11,** which has been described in detail hereinabove.

The water path **56** of the second auxiliary surface heat exchanger **54** is connected via a double-branch water conduit **57** to the water path **58, 59** of the second auxiliary mixing heat exchanger **55.** A pump **60** is included into the conduit **57,** the pump driving the water through the conduit **57,** through the water path **56,** through the spray nozzles **58** and returning it from the bottom portion **59** of the heat exchanger **55** back into the water path **56.**

In order to intensify cooling of the water sprayed in the air path **61** of the second auxiliary mixing heat exchanger **55,** the air supplied into this path is the air pre-cooled in the first auxiliary surface heat exchanger **10.**

The air outlet conduit **28** of the air path **13** of the first auxiliary surface heat exchanger **10** communicates with two air conduits **62** and **63** through which a part of the air cooled in the heat exchanger **10** flows into the air path **61** of the second auxiliary mixing heat exchanger **55,** through the air inlet conduit **64** thereof.

Thus, through the succession of conduits **28, 62, 63** and **64** the air cooled in the first auxiliary surface heat exchanger **10** is supplied into the air path **61** of the second auxiliary mixing heat exchanger **55** where it cools the water sprayed thereinside, whereafter it leaves through the air outlet conduit **65** of the heat exchanger **55** and flows through an air conduit **66** into the fan **21** which drives it through an air conduit **67** either into the attic **22** or into the ambient atmosphere.

The air which has been used in the mixing heat exchangers **4** and **11** flows, respectively, through air conduits **68** and **69** into the air conduit **66** which guides it into the fan **21.**

The other part of the air cooled in the heat exchanger **10** flows via the air conduit **62** into the air inlet conduit **70** of the air path **71** of the second auxiliary surface heat exchanger **54.** The latter cools the air to a still lower temperature, whereafter the air flows along air conduits **72** and **73** into the air fan **20** which drives it through the air conduit **30** into the air-conditioned rooms **19.**

The use of the air conditioning installation illustrated in FIG. **8** in some cases makes it possible to cool the ambient air down to a temperature practically equal to the dew point of the air in the initial state thereof.

Such deep cooling of the ambient air without the use of refrigerating machines can be effected only by the installation of which the principal structure is illustrated in FIG. **8.**

To conclude, let us dwell on some of the characteristic features of the herein disclosed novel air conditioning installation.

An air conditioning installation constructed in accordance with the present invention is intended for round-the-year operation. Thus, in wintertime and over cool periods it is advisable to use the second section **1b** (see, for example, the modification illustrated in FIG. **4**) of the main surface heat exchanger for heating the air. Then, in the auxiliary mixing heat exchange **11** there is performed adiabatic humidification of the air being treated. The final heating of the air is then effected in a surface heat exchanger which is connected intermediate of the air conduits **33** and **48.** The air fan **21** drives the heated air through the air conduit **36** (which in this case should be connected to the air conduit **30**) into the rooms **19.** In wintertime the fan **20,** the first section **1*a*** of the main surface heat exchanger and the auxiliary surface heat exchanger **10** are not operated.

It is highly advisable to use the herein disclosed air conditioning installation in the areas with hot, dry climate in association with accumulator tank means.

The accumulator tank means should be connected in parallel with the double-branch conduit **14** which establishes communication between the auxiliary surface heat exchanger **10** and the auxiliary mixing heat exchanger **11.**

At nights the air fan **20** is kept idle, and the air fan **21** is operated, whereby the water in the accumulator tank means becomes substantially cooled, and during the next day this cooled water is used in the auxiliary heat exchanger **10** for cooling the air flowing therethrough.

The ambient air and the re-circulation air can be cleaned in the herein disclosed air conditioning installation by means of appropriate filters positioned upstream of the main surface heat exchanger and upstream of each one of the mixing heat exchangers.

Instead of water used in the herein disclosed air conditioning installation as the intermediate coolant circulated through the water paths of the surface and mixing heat exchangers thereof the installation can make use of various known brines that would be more intensively cooled within the mixing heat exchangers as a result of their contact with the air being treated.

The herein disclosed plant can be employed not only as an air conditioning one, but also as an air-operated refrigerating apparatus for cooling a cooling agent, e.g., water in the auxiliary mixing heat exchanger **11** to a temperature substantially lower than the wet-bulb temperatures of the ambient air.

Thus, the consumers of the cold produced by the installation may be various chambers and other objects taking the place of the auxiliary surface heat exchanger **10** (FIG. **1**), into which the liquid coolant will be supplied through the corresponding branch of the conduit **14** and the cooled air will be supplied through the air conduit **25** from the main surface heat exchanger **1.**

An installation constructed in accordance with the present invention can be further used for cooling various gases instead of the ambient air, e.g., exhaust gases produced by combustion of fuel.

The present invention may be embodied in a room air conditioner operating without a refrigerating machine.

The use of an air conditioning or like installation constructed in accordance with the present invention proves to be very profitable from the economical point of view, because it provides for obtaining desired characteristics of air or other gases in the associated rooms and other premises without the employment of refrigerating machines, whereby both the capital investment and the running costs are considerably reduced.

We claim:

1. An installation for conditioning air in an associated space comprising: a main surface heat exchanger having an air path and an air inlet conduit through which air to be conditioned is supplied into said air path; a main mixing heat exchanger wherein air is used for cooling liquid serving as the intermediate coolant in said main surface heat exchanger; at least one auxiliary surface heat exchanger and at least one auxiliary mixing heat exchanger having the respective air paths thereof communicating through said air path of said main surface heat exchanger with said air inlet conduit of said air path of said main surface heat exchanger, whereby the air supplied into said at least one auxiliary surface heat exchanger and into said at least one auxiliary mixing heat exchanger is the air pre-cooled within said main surface heat exchanger; the liquid coolant path of said at least one auxiliary mixing heat exchanger being connected through liquid coolant conduit means with the liquid coolant path of said at least one auxiliary surface heat exchanger, said respective air paths of said main mixing heat exchanger and of said at least one auxiliary mixing heat exchanger communicating through air conduit means, and said air inlet conduit of said air path of said auxiliary mixing heat exchanger being connected to a conduit communicating with said space associated with said air conditioning installation for withdrawing air therefrom.

* * * * *