J. A. SHERMAN.

DRINKING CUP HOLDER FOR INVERTED BOTTLES.

APPLICATION FILED AUG. 1, 1916.

1,266,066. Patented May 14, 1918.

Fig. 1.

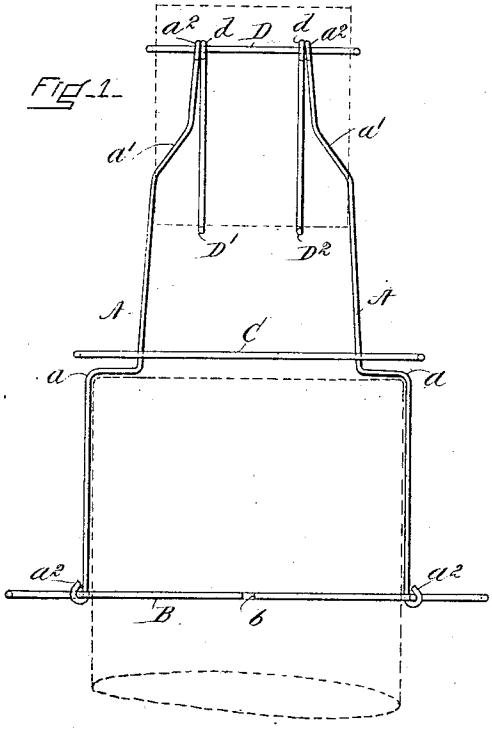

Fig. 2.

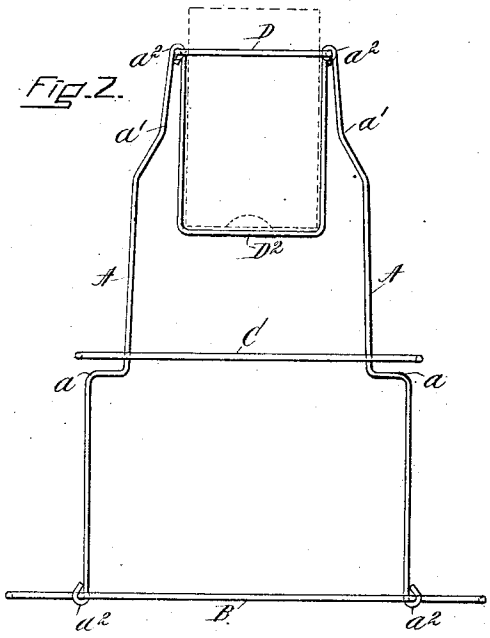

Fig. 3.

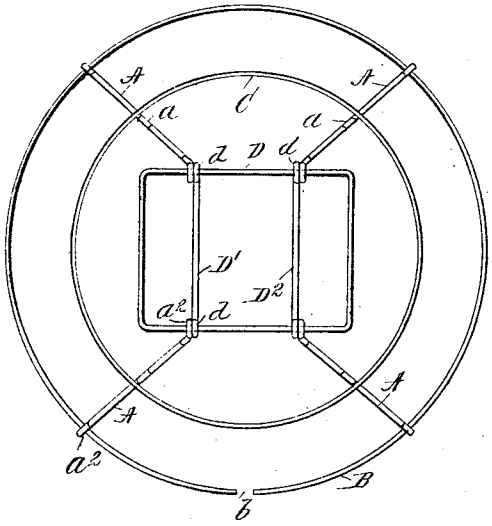

Fig. 4.

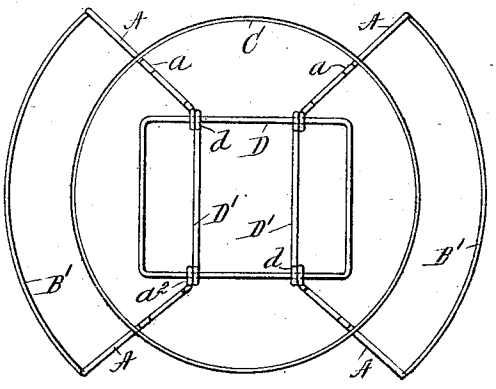

INVENTOR:

John A. Sherman

By Howson & Howson

his attorneys

UNITED STATES PATENT OFFICE.

JOHN A. SHERMAN, OF WORCESTER, MASSACHUSETTS.

DRINKING-CUP HOLDER FOR INVERTED BOTTLES.

1,266,066. Specification of Letters Patent. **Patented May 14, 1918.**

Application filed August 1, 1916. Serial No. 112,596.

To all whom it may concern:

Be it known that I, JOHN A. SHERMAN, of Worcester, in the county of Worcester and State of Massachusetts, a citizen of the United States, have invented a new and useful Improvement in Drinking-Cup Holders for Inverted Bottles, of which the following is a specification.

My invention relates to a type of holder for a package of paper drinking cups to be used in connection with the ordinary inverted bottles of spring water usually found in offices and stores. As is well known, these bottles are inverted in a suitable receptacle which has a spigot attached. Inasmuch as ordinances provide for individual drinking cups in public and such places, various kinds of cups and holders have been devised for this purpose, but, so far as I am aware, no one has invented a holder to fit over the bottle to hold a package of flat cups of the type which forms the subject-matter of my application for Letters Patent of the United States, Serial No. 859,704, filed September 1, 1914. Bottles of this kind are not exact in size, but vary in circumference a trifle.

The object of my invention is to provide an easily-removable holder which is automatically adjustable to bottles thus varying a little in size and which is of a construction such that the cost of production will be extremely small.

My invention will be understood from the drawings, in which—

Figure 1 is a front elevation of the device in operative position, a part of the inverted bottle being shown in dotted lines.

Fig. 2 is a side elevation of the device.

Fig. 3 is a plan view of the holder.

Fig. 4 is a plan view of a variation of the device.

In constructing my device I prefer to make use of heavy galvanized wire and, as shown in the drawings, my invention comprises a framework having four uprights A. These uprights are bent to form elbows as at a and near the top they converge inwardly and upwardly as at a^1 (see Figs. 1 and 2). While it is not essential that four of these uprights be used, for purposes of proper stability that number is effective. At the top and bottom the ends of the uprights A are bent to form eyes a^2. Through the bottom eyes a^2 is passed the ring B which is split as at b. By this means the ring B acts as a spring member so that upon placing the frame over the bottle as shown in Fig. 1 the uprights will adjust themselves to the particular size of the bottle. For this purpose the ring B is free to move through the eyes a^2 which are nearest the split b, but are soldered or otherwise attached to the eyes a^2 on the opposite side (see Fig. 3), thus permitting the frame to be sprung as a whole.

At a point just above the elbows a on the uprights A is attached by solder or otherwise the ring C so that the framework above the elbows a is held rigid and immovable whatever springing of the uprights below the elbows is necessary to fit the device to the bottle. This causes a firm substantial bearing of the upper framework upon the inverted bottom of the bottle.

At the top of the uprights through the eyes a^2 is attached the frame D, which as shown is rectangular in form. This frame D forms the supporting member for the frame which holds the package of cups, as well as strengthening the framework. This latter frame is formed of the U-shaped frames D^1, D^2, which depend from the frame D, their upper ends being attached to the frame D by eyes d which are made fast by solder. The frame D is also made fast at the eyes a^2, to the uprights.

In Fig. 4 a variation of my device is shown in that the ring B as a complete circle is eliminated. The uprights on each side are connected by the rods B^1 so that the uprights spring outwardly on opposite sides to fit the bottle. To better strengthen the framework the ring C in this figure is raised somewhat above the point shown in Fig. 1.

The advantages of this invention will readily appeal to those who make use of these bottles of drinking water. I do not intend to limit myself to the precise form and construction shown, for various changes may be made and yet be within the scope and spirit of my invention.

What I claim as my invention is:—

1. In a holder of the kind described, a framework having means adapted to rest upon the shoulder of a bottle or the like and means attached thereto for holding a package of drinking cups substantially as described.

2. In a holder of the kind described, a framework comprising uprights, a circular spring member attached to the lower ends of said uprights to vary the size of said

holder, and means for holding a package of drinking cups attached to said framework substantially as described.

3. In a holder of the kind described, a framework comprising uprights having elbows therein, a circular spring member attached to the lower ends of said uprights whereby said uprights may be sprung to vary the size of said holder, a member located above said elbows to strengthen said framework, and means attached to said framework for holding a package of drinking cups substantially as described.

4. In a holder of the kind described, a framework comprising uprights having elbows therein, a circular spring member attached to the lower ends of said uprights whereby said uprights below said elbows may be sprung outwardly to vary the size of said holder, a circular member attached to said uprights above said elbows to strengthen said frame and prevent said uprights from springing above said elbows, a frame connecting the upper ends of said uprights, and a support for a package of cups comprising frames depending from said top frame substantially as described.

5. In a device of the kind described, a framework comprising uprights having elbows adapted to fit over and rest upon the top surface of a bottle, a circular spring member attached to the lower ends of said uprights to spring said uprights outwardly below said elbows, a circular member attached to said uprights above said elbows to strengthen said framework, and a supporting frame attached to the top of said uprights to hold a package of drinking cups.

JOHN A. SHERMAN.

Copies of this patent may be obtained for five cents each, by addressing the "Commissioner of Patents, Washington, D. C."