Nov. 12, 1968 F. A. MILLER, JR., ET AL 3,410,559

AIRBORNE TARGET WITH INFRARED SOURCE

Filed April 26, 1966 2 Sheets-Sheet 1

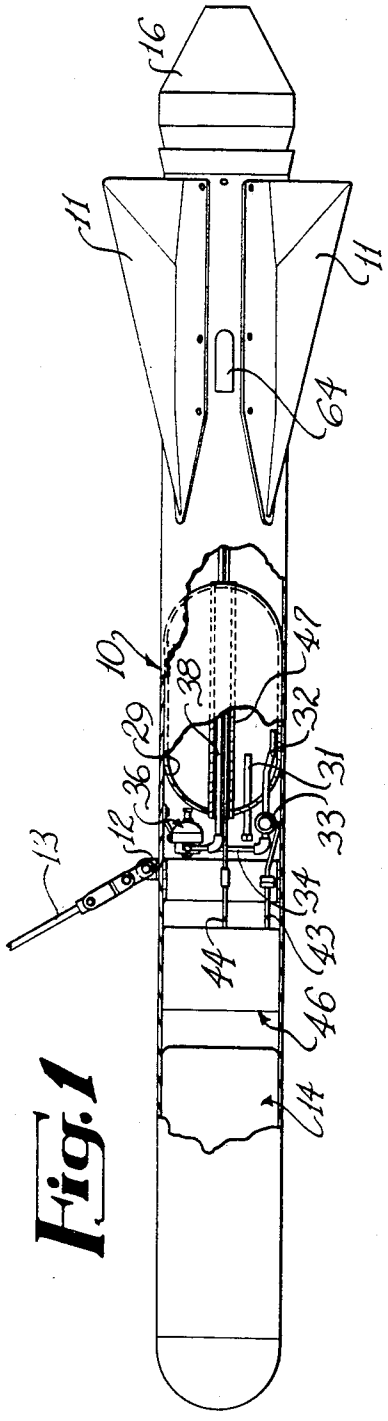

Fig. 1

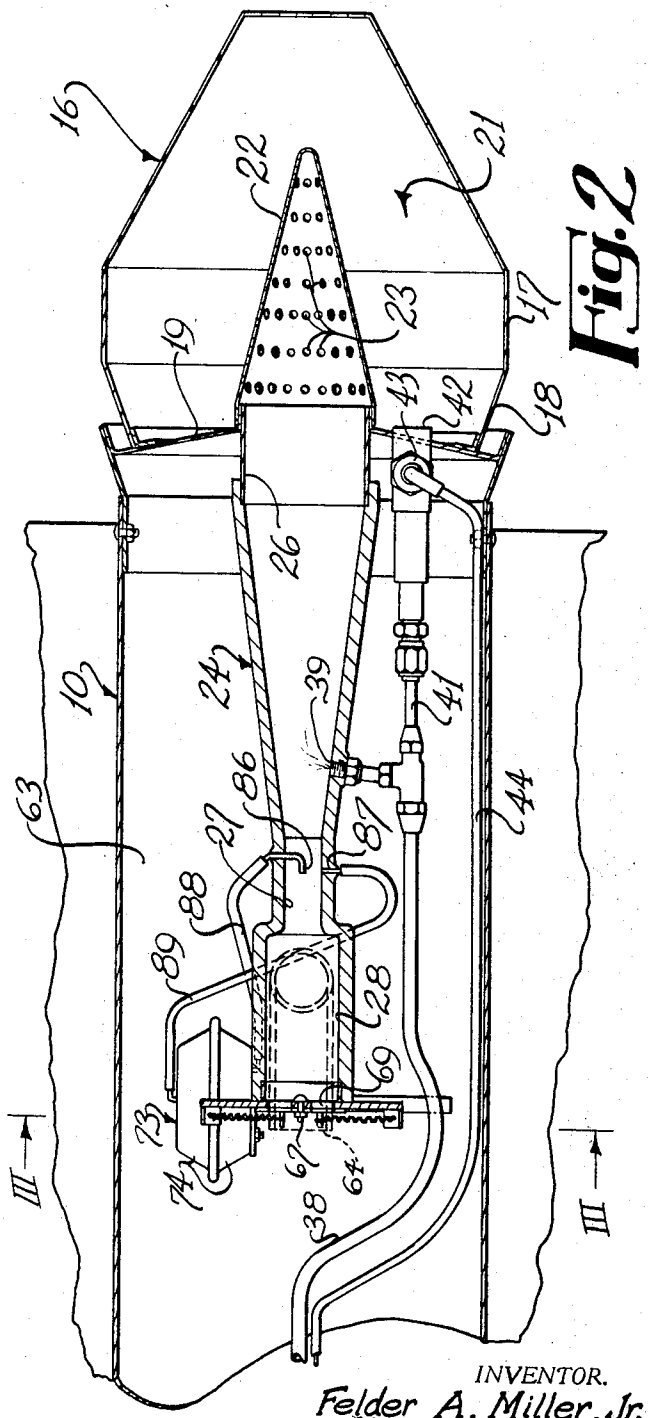

Fig. 2

INVENTOR.
Felder A. Miller, Jr.
Charles L. Ray
Jennings Carter & Thompson
Attorneys

Nov. 12, 1968 F. A. MILLER, JR., ET AL 3,410,559

AIRBORNE TARGET WITH INFRARED SOURCE

Filed April 26, 1966 2 Sheets-Sheet 2

Fig. 3

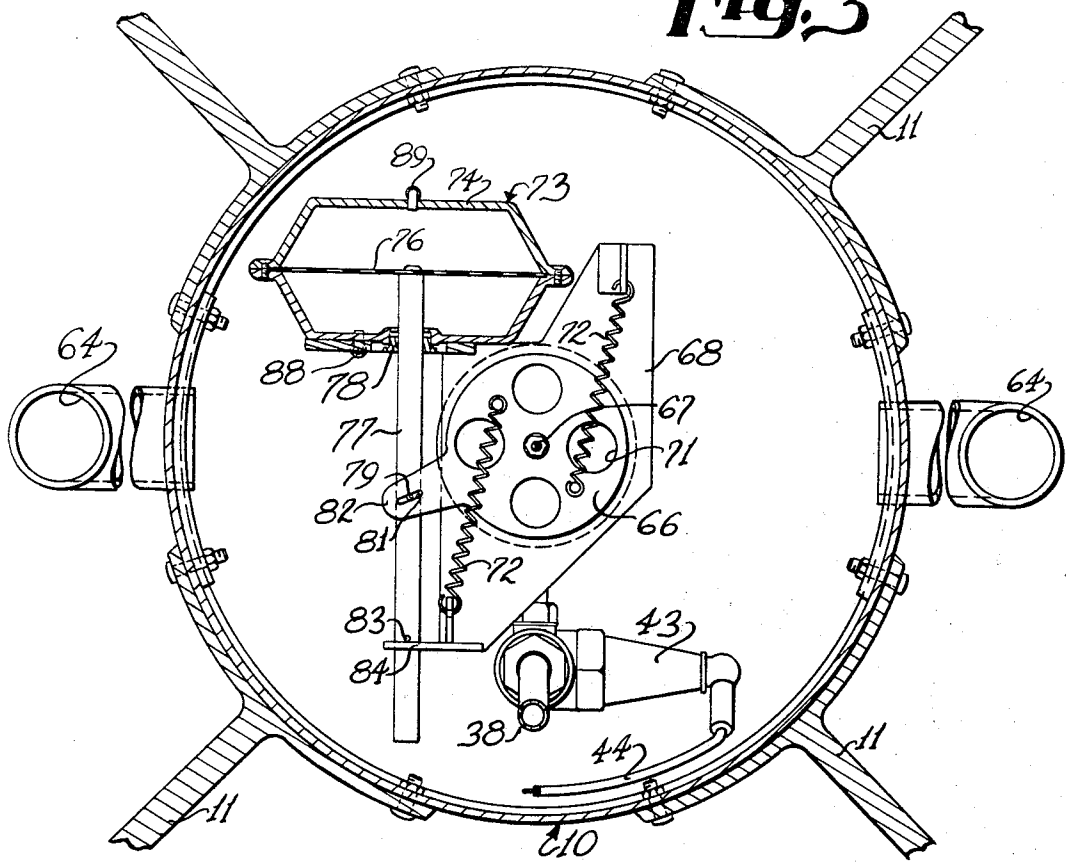

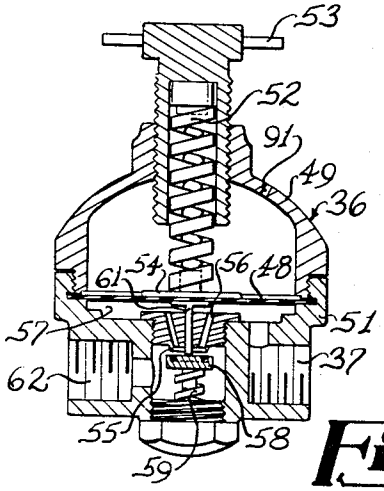

Fig. 4

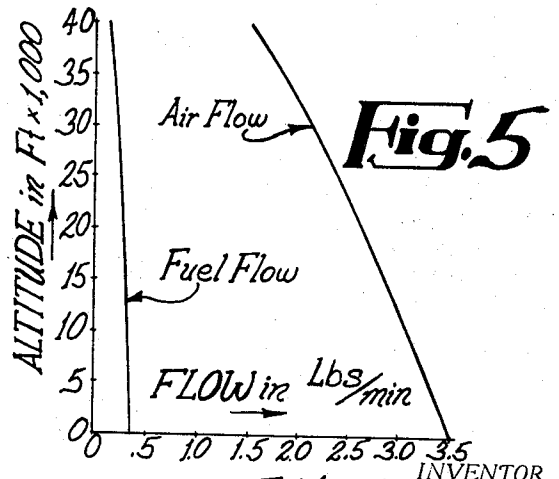

Fig. 5

INVENTOR.
Felder A. Miller, Jr.
Charles L. Ray
Jennings Carter & Thompson
Attorneys

United States Patent Office 3,410,559 Patented Nov. 12, 1968

3,410,559

AIRBORNE TARGET WITH INFRARED SOURCE

Felder A. Miller, Jr., and Charles L. Ray, Birmingham, Ala., assignors to Hayes International Corporation, a corporation of Delaware

Filed Apr. 26, 1966, Ser. No. 545,309
3 Claims. (Cl. 273—105.3)

ABSTRACT OF THE DISCLOSURE

An airborne target carrying a hydrocarbon fueled infrared source, the apparatus being equipped with pressure sensitive controls for the burner which assure the burning of precise quantities of fuel at different density altitudes and at different air speeds, whereby a substantially predetermined amount of infrared radiation is emitted at all times.

Our invention relates to an airborne target which is provided with an infrared source, more specifically, an infrared source generated by the combustion of hydrocarbon fuels.

As is well known, the use of infrared source targets for practice detection of aircraft is currently widely used. Various types of homing missiles, capable of sensing and directing their own courses to a source of infrared energy are in use. In the past, various forms of energy have been employed to produce the infrared source on such targets including the burning of solid fuels, electrical energy and the like.

Our invention has for an object the provision of a target of the character designated in which the infrared source may be energized by the burning of hydrocarbon fuels, for instance, one of the liquid petroleum gases such as propane.

A more specific object of our invention is to provide a target equipped with an LPG (liquid petroleum gas) source together with means to control the burning of precise quantities of said fuel at different density altitudes and at different air speeds, whereby a substantially predetermined amount of infared radiation is emitted at all times.

A more specific object of our invention is to provide means automatically effective, within a predetermined range, accurately to regulate the fuel-air ratio supplied to the burner, whereby substantially constant infrared output is maintained.

Briefly, our improved target comprises an elongated body for housing various ones of the instrumentalities necessary for the operation of the system and in which the infrared emitter is positioned on the aft end of the target. The target carries a tank of pressurized LPG such as propane, pressurized in the sense that the fuel itself due to vaporization produces pressure in such tank. The fuel is supplied in liquid form to an elongated burner having a mantle located within the infrared emitter and the amount of such fuel is automatically varied in accordance with density altitude by means of a regulator. Ram air supplied to the intake air passage for the burner by means of scoops which point forwardly in the direction of movement of the target through the air. Located in a restricted area or venturi in the air passage leading to the burner, we provide pitot and static lines. These lines are applied to either side of a diaphragm operator for an air valve which controls the quantity of air admitted to the burner. Therefore, the pitot-static system is effective to maintain a substantially predetermined volume of combustion air for mixture with the fuel, at different forward speeds of the target and at different density altitudes. Thus, at a very low altitude of, say, 1,000 feet mean sea level, and at a given speed of, say, 150 knots, the air valve would supply a greater total

volume of air in unit time than would be supplied at the same speed at a much higher altitude, of say 10,000 feet. At the same time, due to the outside pressure effect on the fuel regulating valve the amount of fuel delivered to the burner decreases. Thus, by regulating the volume of air and the volume of fuel we achieve the object of providing an airborne target capable of emitting equal and similar infrared energy in a predetermined infrared spectural band at varying speeds and altitudes, and resultant densities. In addition, we so shape the emitter that the emissions therefrom conform to the emission pattern of an aircraft which it is desired to simulate. Likewise, we provide an ignitor in the form of a spark plug which assures that the target does not flame out during operation, or if flame out occurs, reignites the burner.

Apparatus illustrating features of our invention is shown in the accompanying drawings forming part of this application in which:

FIG. 1 is a side elevational view of our improved target, certain parts being broken away and in section;

FIG. 2 is an enlarged detail sectional view of the aft end of the target with certain parts broken away;

FIG. 3 is a further enlarged detail sectional view taken generally along line III—III of FIG. 2.

FIG. 4 is a detail vertical sectional view through the fuel control regulator; and

FIG. 5 is a set of curves illustrating the relationship of fuel to air at different altitudes.

Referring now to the drawings for a better understanding of our invention we illustrate the same in association with an airborne target having an elongated body indicated generally by the numeral **10**. Body **10** is generally of tubular shape, has sets of stabilizing fins **11** at its rear or aft end, is provided with a towing attachment **12** for a tow cable **13**, and may be provided in its forward end with a parachute recovery pack indicated generally at **14**. In view of the fact that the operation of the recovery parachute is a well-known expedient we will not detail it further here.

The body of the target, as stated, may be a hollow, elongated tubular member and at its aft end is equipped with the infrared emitter indicated generally by the numeral **16** and which, described generally, may be of truncated cone shape at its rear end and having an intermediate, generally cylindrical section **17** and a forward, conical section **18** which is joined to the aft end of the body **10** as illustrated. An imperforate, circular wall **19** is provided so that the area indicated generally at **21** is the combustion chamber for the fuel as will presently appear.

Located rearwardly of the wall **19** and within the emitter **16** is a burner head or flame mantle **22**. The mantle may be generally cone shaped and may be provided with a multiplicity of openings or perforations in its surface as illustrated at **23**. The number of these perforations, area-wise, is such that the velocity of the fuel through these holes is increased until it is above the flame propagation rate, whereby the fuel will not burn up into the air supply tube. In practice, the mantle **22** has, over its entire surface, openings which are equivalent to about 32% of the entire surface thereof.

An air-fuel supply conduit **24** has its rear end connected through a sleeve **26** to the inside of the conical mantle **22**. At **27** we illustrate a venturi or reduced cross sectional portion of the tube **24** and at **28**, namely, at the entrance end of the tube **24** we show an enlarged section.

The fuel for our improved target, in the form of liquid propane or like hydrocarbon fuel, is stored in a tank **29** carried within the target. The tank may be provided with a filler tube **31** and liquid fuel is withdrawn through a pipe **32** under control of a solenoid valve **33** in line **32**. From the valve **33** the fuel is supplied through a line **34** to a pressure regulator valve indicated generally at **36**, which

valve is shown more in detail in FIG. 4. From the outlet side 37 of the valve 36 the liquid fuel is supplied through a line 38 to a fuel orifice 39 located rearwardly of the inlet end of the tube 24. A pilot line 41, reduced in size to supply a small amount of fuel continuously, exits into the combustion chamber 21 at 42. A spark plug 43 is energized through a high tension line 44, which line 44 is connected to a sparking coil. The sparking coil is indicated in the drawings as being contained in a battery pack indicated by the box 46, which box also includes a source of electrical energy such as a battery for operating both the sparking coil and the solenoid 33.

As shown in FIG. 1 the fuel supply line 38 may pass through a tube 47 welded fluid tight and passing through the center of the tank 29.

Referring particularly to FIG. 4 the fuel regulator 36 may embody a diaphragm 48 secured fluid tight around its edges by the threaded halves 49 and 51 of the regulator body. A compression spring 52 under control of a manually operable handle 53 presses downwardly on top of the regulator diaphragm 48 through a metallic washer 54.

Beneath the diaphragm 48 is a stationary valve seat 55, and a plurality of fuel passages 56 lead from beneath the seat 55 into the space 57 directly beneath the diaphragm 48.

The movable valve 58 is spring biased upwardly toward its seat by spring 59. A plunger 61, resting beneath the lower surface of the diaphragm and directly beneath the washer 54 has its stem in contact with the top surface of the valve 58.

Liquid fuel is supplied to the regulator 36 through opening 62 and as previously stated discharges through the opening 37.

Referring now particularly to FIGS. 2 and 3, it will be understood that the space inside the body 10 and indicated by the numeral 63 is maintained under pressure by means of a plurality of ram air pipes 64 which deliver air into the space 63 due to forward motion of the target. As an alternative to using ram air for pressurizing the space 63 we may use a blower or turbo-supercharger as used on small airborne engines. Therefore, whenever the target is being moved through the air space 63, which surrounds entrance end of the air tube 24, is under super atmospheric pressure.

The valve for controlling the quantity of air entering the air fuel pipe 24 may be in the form of a disc 66 mounted for rotation at its center on a bolt 67 in turn supported by a plate or bracket 68. The plate or bracket 68 has a plurality of holes 69 therein and in like manner the valve plate 66 has a plurality of holes 71 therein. When these holes are in register as illustrated in FIG. 3 the valve is wide open and the maximum amount of air is permitted to enter the tube 24. The valve plate 66 is biased by the springs 72 to the full open position as will presently appear.

The motorized operator for the valve 66 may be in the form of a pressure differential diaphragm control indicated generally by the numeral 73. Thus, the unit comprises the housing 74 and diaphragm 76 clamped airtight between the halves thereof. An operating stem 77 passes through a packing or seal 78. A pin 79 passes through an elongated slotted opening 81 provided in an outwardly projecting arm 82 integrally formed with the valve plate 66. A pin 83 projecting from the side of the stem 77 is adapted when the valve is full open in response to the action of the springs 72 to contact a plate stop 84.

As shown in FIG. 2, we place in the venturi or reduced area portion 27 of the tube 24 a Pitot tube 86. Also located in the venturi section of the tube 24 is a static connection 87. The Pitot 86 is connected by a tube 88 to the portion of the housing 74 of the operator 73 beneath the diaphragm 76. The static connection 87 is connected through a line 89 to the upper portion of the housing 74 above the diaphragm 76.

Concerning the emitter 16, while it may be made of various forms of material, nevertheless we prefer to make it of sintered woven wire sheet material. A suitable form of such material is sold under the trademark "Rigimesh" by the Aircraft Porous Media, Inc., Glen Cove, N.Y. This material is of a nature to be porous enough to permit the passage therethrough of the products of combustion from the burner and yet at the same time to give off infrared energy within the proper spectrum. Further, it will be noted that the contour of the emitter 16 and the outer surface of the mantle 22 and the inner walls of the emitter generally are substantially constant. We have found that this provides a better distribution of heat around the inside of the emitter, producing a more accurate pattern of energy, that is, one more nearly patterned after the infrared emissions of a jet engine. In practice we flame spray the outer surface of the mantle with a ceramic material such as aluminum oxide thereby to reduce the possibility of strike back of flame into the air passage proper.

From the foregoing the method of constructing and using our improved target and the advantages thereof may be now more fully explained and understood. If the target is to be launched from a carrier aircraft and towed, it is deployed behind the towing aircraft through the cable 13. Through the medium of certain break away switches, not shown, or if desired under control of radio responsive mechanisms, also not shown, the solenoid 33 is energized and the high tension coil for the spark plug 43 also is energized. Having previously set the control handle 53 of the regulator 36 to the predetermined position, the target is now towed through the air, whereupon through the ram jet tubes 64 the space 63 around the end of the air-fuel tube 24 is pressurized. In view of the relative arrangement of the Pitot tube 86 and the static connection 87, the shutter-like valve plate 66 is accurately controlled to regulate the volume of air admitted to the inside of the tube 24 both in accordance with motion of the target through the air as well as density of the air, the latter of which of course changes with altitude. In view of the fact that the fuel supply in liquid form is supplied to the nozzle 39 through the regulator 36, and because the regulator 36 has its upper section vented to atmosphere through a hole 91, the amount of fuel supplied decreases with altitude. Thus, upon a decrease of fuel supply with altitude the volume of air entering the tube 24 also needs to be decreased and this is accomplished automatically due to the relationship of the pitot tube and static line 87, as these variables affect the setting of the diaphragm 76 of the operator 73. Thus, by predetermining the total amount of energy desired by a setting of the manual handle 63 of regulator 36, we assure complete burning of the fuel by supplying the correct amount of air, under varying conditions of speed and air density, namely, changes in altitude.

In FIG. 5 we show representative curves graphically depicting typical fuel-air flow relationships at various altitudes which we achieve with our improved system. Since the lower density of the air occurring at increasing altitudes reduces the convective cooling of the emitter 16, less fuel consumption is required to maintain a predetermined energy output. This accounts for the relative slopes of the curves of FIG. 5. While we make provision for towing the target, we have successfully used it by mounting it directly on an aircraft or drone.

In view of the foregoing it will be apparent that we have devised an improved target which is equipped with an infrared source fueled by a hydrocarbon fuel. While we show the fuel as being liquid it will be apparent that it might be of the gaseous type. However, we prefer to use liquid fuel such as propane because of its high heat content, and because of the accuracy of regulating the quantity through the regulator such as shown as 36.

While we have shown our invention in but one form, it will be obvious to those skilled in the art that it is not

so limited, but is susceptible of various changes and modifications without departing from the spirit thereof, and we desire, therefore, that only such limitations shall be placed thereupon as are specifically set forth in the appended claims.

What we claim is:

1. In an airborne target:

(a) an elongated body disposed to be moved endwise through the air,

(b) a supply of hydrocarbon fuel under pressure carried by the body,

(c) an infrared emitter at the aft end of the target,

(d) a burner for said fuel located in position to supply heat to the emitter,

(e) a supply of combustion air under pressure for the burner, and

(f) means operable within a predetermined range of air density to maintain a substantially constant ratio of air to fuel supplied to the burner comprising:

(1) a valve controlling the flow of combustion air to the burner,

(2) control means for said valve responsive to target velocity and air density and effective upon changes in both to maintain a predetermined flow of combustion air to the burner,

(3) a control valve for the fuel, and

(4) control means for the fuel valve responsive to decreases in pressure density to decrease the flow of fuel to the burner within said predetermined range, and vice versa.

2. In an airborne target equipped with a hydrocarbon fueled infrared energy source:

(a) a burner for said fuel,

(b) means controlling the flow of fuel to the burner,

(c) a passage for delivering combustion air to the burner,

(d) a valve controlling the flow of air in said passage,

(e) a differential pressure operator operatively connected to the valve for changing its setting, and

(f) pitot and static lines operatively connecting said differential pressure operator to the air supply passage, whereby said operator sets said valve to maintain substantially constant pitot-static pressure differential in said air passage, maintaining a substantially constant ratio of air to fuel supplied to the burner.

3. Apparatus defined in claim **1** in which said operator is of the diaphragm type, said pitot line being connected to the operator to exert valve closing force on the diaphragm upon the occurrence of increasing pitot pressure, said static line being connected to the operator to exert valve closing force on the diaphragm upon the occurrence of decreasing static pressure, and means biasing said valve toward open position with a force substantially equivalent to the resultant force imposed upon the diaphragm by a given pitot-static pressure differential.

References Cited

UNITED STATES PATENTS

2,418,566	4/1947	Arnhym	158—28
2,933,317	4/1960	Pittinger et al.	273—105.3
3,086,202	4/1963	Hopper et al.	273—105.3 X
3,219,827	11/1965	Pittinger	273—105.3 X

ANTON O. OECHSLE, *Primary Examiner.*

M. R. PAGE, *Assistant Examiner.*