March 16, 1948. J. G. BRINK 2,437,934

CLOSURE

Filed April 14, 1945

Fig. 1.

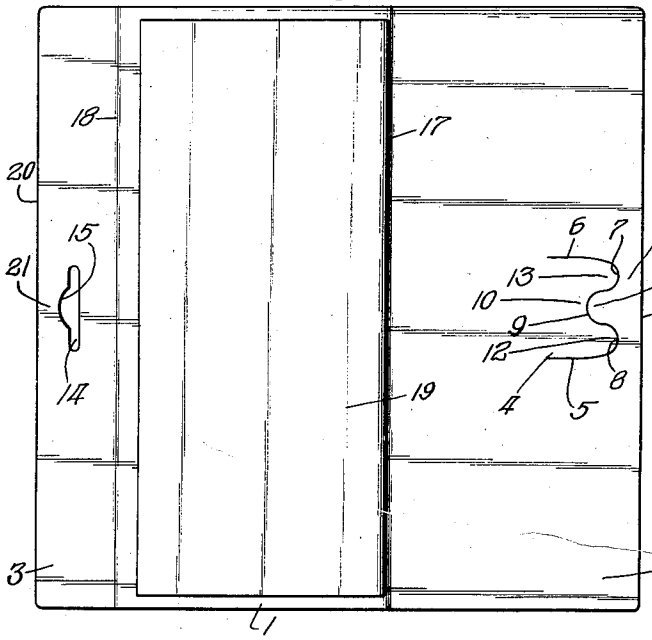

Fig. 2.

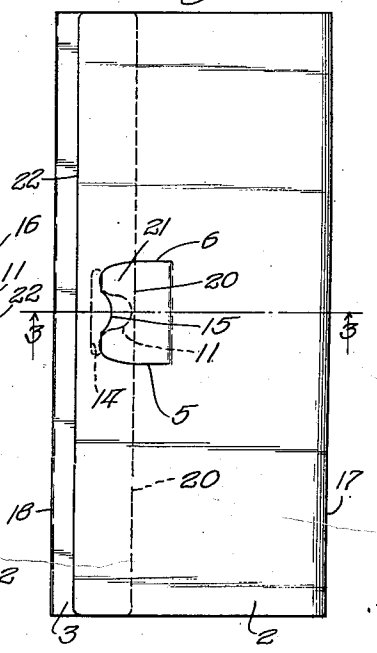

Fig. 3.

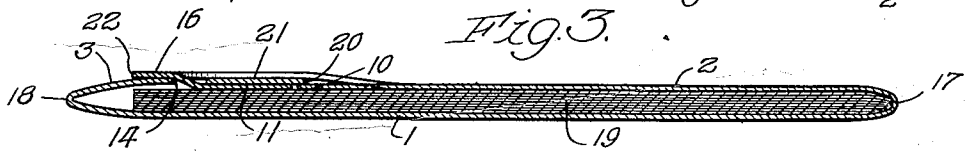

Fig. 4.

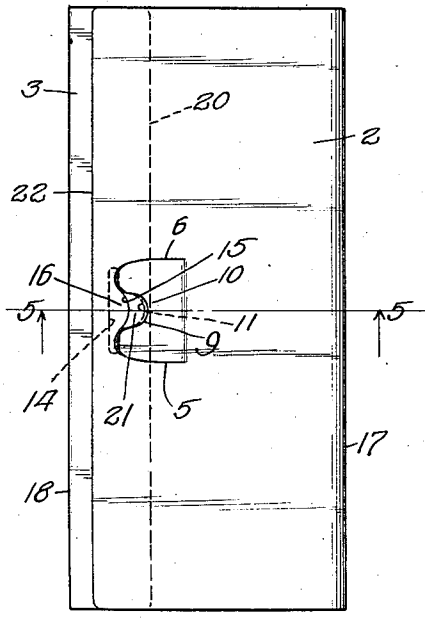

Fig. 5.

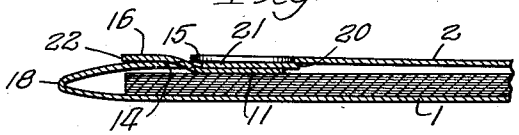

Fig. 6.

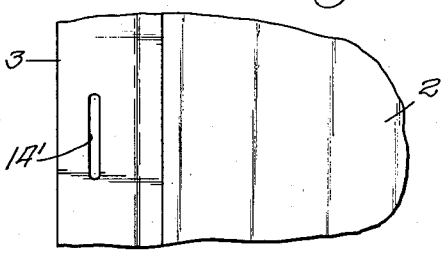

Inventor:
John G. Brink,
By Chilton, Miles, Schroeder,
Merriam & Algren, Attys.

Patented Mar. 16, 1948

2,437,934

UNITED STATES PATENT OFFICE

2,437,934

CLOSURE

John G. Brink, Evanston, Ill., assignor to Rand McNally & Company, a corporation of Illinois

Application April 14, 1945, Serial No. 588,274

2 Claims. (Cl. 229—84)

1

This invention relates to closure means, and more particularly, although not limited thereto, means for releasably securing together the cover portions of memorandum or document jackets, and the cover portions of jackets, envelopes or other flexible containers adapted for containing blank papers, papers having printed or memorandum information thereon, maps, and papers or other articles of any character adapted to be contained either bound or loose in such jacket or container. I wish it understood that this closure or fastening means is not limited in use to flat jackets or containers, but is adaptable to any other shape of container in which there are present a pair of overlapping, flexible portions that may be attached together with the closure means of the present invention.

Prior to my invention there has been great need for a closure means for jackets, containers and the like, in which the closing cover may be quickly and securely fastened in closed position without the need of separate snap fasteners, buckles, tapes, strings and the like, and yet be readily and quickly unfastened when access is desired to the inside. One of the objects of my invention is to provide such closure means as to accomplish the above advantages, and at the same time be economical to manufacture, efficient in operation and pleasing in appearance.

Another object is to make such closure means integral with the overlapping cover parts, and of a nature to be easily and effectively operated; a further feature being to eliminate the use of separate parts, and provide the fastening means of the present invention by merely making slits and/or slots in the material of the overlapping cover parts and interengaging some of the slitted or slotted portions thus formed; a still further object being to provide a closure means of the kind referred to in which there are no projecting parts to become injured, or catch in a person's pocket or the like; an additional feature being the ability to quickly unfasten the closure by merely pressing inwardly on the longitudinal side edges of the jacket, container or the like, and then pressing laterally at the inner edge of the slitted portion and allowing the respective parts to separate by releasing the pressure on the side edges; and such further objects, features, advantages and capabilities inherently possessed by my invention, as will later more fully appear.

My invention further resides in the combination, construction and arrangement of parts illustrated in the accompanying drawings, and while I have shown therein preferred embodiments, I

2

wish it understood that the same are susceptible of modification and change without departing from the spirit of my invention.

In the drawings:

Fig. 1 is a plan view of a container jacket with the cover, back and flap laid out flat and showing paper sheets lying over the back.

Fig. 2 is a plan view of the jacket of Fig. 1 with the flap and cover in closed position and fastened together by a closure fastener embodying my invention.

Fig. 3 is an enlarged transverse section on the line 3—3 of Fig. 2.

Fig. 4 is a plan view of a closed jacket in which the same parts are closed in a slightly different manner to give a "quick closure."

Fig. 5 is a section on the line 5—5 of Fig. 4.

Fig. 6 is a fragmentary plan view of a portion of one of the flaps showing a straight slot.

Referring more in detail to the drawings I have, for illustrative purposes only, shown my invention as applied to a memorandum or document jacket or folder comprising a back 1, to the longitudinal side edges of which are swingably connected two front flaps or covers 2 and 3, which, while one is shown wider than the other, may be of any desired widths relatively to each other. Flap 2 is formed, a suitable distance inwardly of its outer longitudinal edge, with a contoured slit 4 extending entirely through the material of the flap, and comprising side slits 5 and 6 which continue into the curved end slits 7, 8 and 9. As will be seen in Fig. 1 these slits are continuous with each other and form an inner tongue 10 and an outer tongue 11. Tongue 10 has two outwardly extending portions 12 and 13, and due to the slits extending entirely through the thickness of the flap may be flexed inwardly or outwardly of the plane of the flap by pressure of the fingers or flexing of the flap.

Flap 3 has formed inwardly of its longitudinal edge, a slot 14, having on its outer side (when laid out flat) an enlargement 15 (see Fig. 1). Slot 14 is so positioned in flap 3 as to be in lateral alinement with tongue 11 of flap 2, so that when flap 2 is lapped over flap 3, tongue 11 may be inserted through slot 14 (see Fig. 3). Tongue 11 is integrally connected with flap 2 by means of the connecting strip 16. As seen in Fig. 3, the flaps 2 and 3 are swingably connected to the back 1 at 17 and 18 respectively, by folds in the flexible material, however I wish it understood that other forms of hinge means may be used as desired. This enables flaps 2 and 3 to be swung inwardly into overlapping position to close the

jacket, or to be swung outwardly to open the jacket, as occasion may require. When these flaps are swung inwardly to closed position, they may be releasably secured in such position by the closure means of the present invention in the following manner.

Assuming the flaps to be in the open position shown in Fig. 1, with any desired papers 19, or other contents, either fastened to the back 1 or laid loosely thereon as desired, the flaps will then be swung to closed position and while approaching said position the tongue 10 will be flexed slightly inwardly by the fingers of the operator (unless it already stands at such inward angle as it may do after continued use) and the free edge 20 of the flap 3 will be passed underneath the edge of flap 2 and above the tongue 10 so as to be therebetween when the two flaps are in approximately parallel planes. With the flaps closed in approximately parallel position, the fingers of the operator will then be pressed inwardly on the hinge edges 17 and 18 to flex the back 1 of the jacket outwardly (preferably with the thumb on one edge and the fingers on the other) which will cause the free end of tongue 11 to move above the slot 14, after which a slight inward pressure on this tongue and a simultaneous releasing of the pressure on the hinge edges 17 and 18 will cause the tongue 11 to enter the slot 14 and pass underneath the strip 21 formed integrally with flap 3, due to the tendency of the flexed back to straighten out.

To open this closure and release the flaps for opening of the jacket, the fingers of the operator are again pressed against the edges 17 and 18 to move tongue 11 backwardly out of the slot 14, when a slight inward pressure of the finger against the exposed strip 16 will press this strip inwardly beyond the plane of the tongue, and release of the pressure on the edges of the jacket will slide the tongue over the top of the strip, and the flaps may then be swung to open position. A little practice will enable the operator to become quite skillful in performing the above operations. When the flaps are closed and fastened the tongue 11 will be positioned in the recess in tongue 10 formed by the portion 9 of the slit. The enlarged portion 15 of slot 14 facilitates entry thereinto of the larger curved base portion of the tongue 11, without causing too abrupt a bend in this tongue when the flaps are fastened shut.

As seen in Fig. 2, when the flaps are closed and fastened in the manner described above, the edge 20 of flap 3 will be visible in the opening formed by the tongue 10 being underneath the strip 21. In Fig. 3 the outer edge of the strip 16 of flap 2 is indicated at 22. The flaps and the back may be made of heavy paper, light cardboard, plastics, thin metal, thin tough flexible wood (with separate hinges fastened thereto), fabric, accreted fibers, leather, or any other suitable flexible material available, it being understood that separate hinges may be applied

to effect the swinging movements of the flaps with relation to the back if desired.

Also if a "quick closure" fastener is desired, the same may be manipulated by ignoring the tongue 10, permitting it to remain above the flap 3, and bringing the free end of tongue 11 into registry with the slot, and pressing inwardly on tongue 11 and releasing the pressure on the edges of the jacket or folder and permitting tongue 11 to pass into the slot 14 and underneath the strip 21, as shown in Figs. 4 and 5. This gives a closure that, while not so secure, is quickly operated, and will suffice for temporary purposes. For a secure and more dependable closure I prefer the form shown in Figs. 1–3.

While the lateral enlargement of the slot 14 as at 15, is preferred, a simple straight slot 14' as shown in Fig. 6 may be used if desired, although this form will give a more abrupt bend in the tongue 11 when fastened in position.

Having described my invention, I claim:

1. A closure for containers and the like, comprising a body portion; a first flap hingedly mounted on said portion and being made of flexible material and having a substantially W-shaped slit therein, said flap being continuous from the slit to the marginal edge opposite the hinged mounting and said slit forming on one side thereof a first tongue having on its outer edge a notch, and forming on the other side thereof a second tongue, and a second flap of flexible material hingedly mounted on said portion, said second flap having a substantially straight continuous marginal edge opposite its hinged mounting of a length greater than the width of the slit, and said second flap having a slot therein spaced from its said marginal edge a distance less than the length of said first tongue, said slot being adapted to receive said second tongue, said flaps being movable between open and closed positions, said second tongue extending into said notch when said flaps are in open position, and said second flap having its said marginal edge traversing said first tongue when the flaps are in closed position whereby said first tongue may be inserted under said marginal edge of the second flap and said second tongue may be inserted in said slot.

2. The closure claimed in claim 1 in which said marginal edge of said second flap extends substantially the entire length of the container.

JOHN G. BRINK.

REFERENCES CITED

The following references are of record in the file of this patent:

UNITED STATES PATENTS

Number	Name	Date
873,416	Davis	Dec. 10, 1907
1,461,016	Perry	July 3, 1923
1,476,822	Kronenberger	Dec. 11, 1923
1,670,647	Alter	May 22, 1928