(No Model.)

J. THOMSON, Jr.

CLEARER FOR DRAWING ROLLS OF COTTON MACHINERY.

No. 590,920. Patented Sept. 28, 1897.

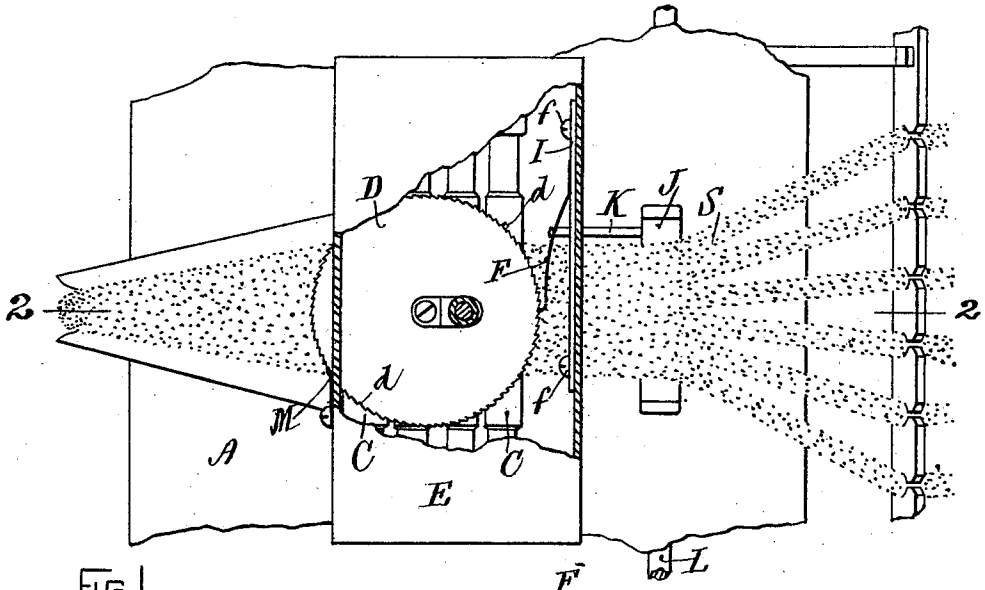

FIG. 1.

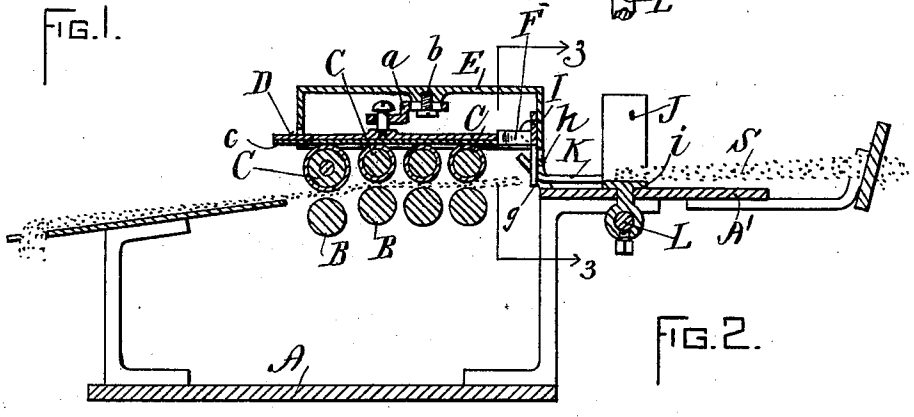

FIG. 2.

FIG. 3.

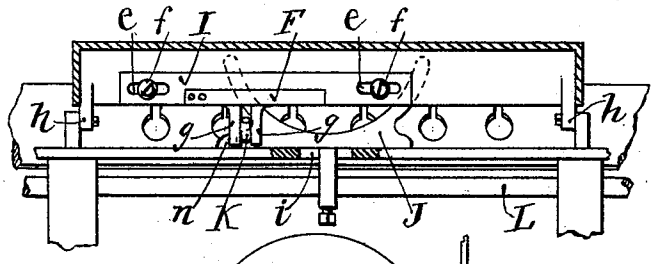

FIG. 4.

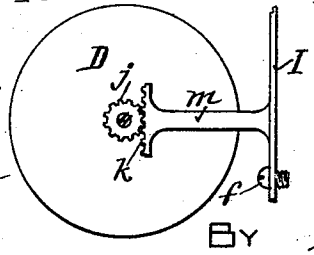

WITNESSES:

Harry J. Garceau

Henry E Reynolds

INVENTOR:

James Thomson Jr.

BY

L. Schofield

ATT'Y.

THE NORRIS PETERS CO., PHOTO-LITHO., WASHINGTON, D. C.

UNITED STATES PATENT OFFICE.

JAMES THOMSON, JR., OF PAWTUCKET, RHODE ISLAND.

CLEARER FOR DRAWING-ROLLS OF COTTON MACHINERY.

SPECIFICATION forming part of Letters Patent No. 590,920, dated September 28, 1897.

Application filed January 12, 1897. Serial No. 618,977. (No model.)

To all whom it may concern:

Be it known that I, JAMES THOMSON, Jr., a citizen of the United States, residing at Pawtucket, in the State of Rhode Island, have invented a new and useful Improvement in Clearers for the Drawing-Rolls of Cotton Machinery, of which the following is a specification.

My invention relates to a rotary disk for clearing the waste from the drawing-rolls; and it consists in improved means for operating the disk, as hereinafter fully set forth.

In the accompanying drawings, Figure 1 represents a detail top view showing a portion of a drawing-frame, the rolls of which are provided with a rotary clearing-disk, a portion of the hinged cover for the rolls being broken away to show the reciprocated mechanism for causing the rotation of the clearing-disk. Fig. 2 represents a vertical section taken in the line 2 2 of Fig. 1. Fig. 3 represents a vertical section taken in the line 3 3 of Fig. 2. Fig. 4 represents a modification.

In the drawings, A represents the table of a drawing-frame; B B, the lower fluted rolls; C C, the leather-covered top rolls, and S the sliver passing through the said rolls. The rotary clearing-disk D, which rests upon the top rolls C, is held for rotation by means of the adjustable bearing-bracket *a*, secured to the hinged cover E, or to a suitable pivoted frame by means of the screw *b*. The disk D is provided with a covering *c*, of flannel, which serves to collect the waste from the surface of the rolls C, and the edge of the said disk is provided with the notches *d d*, adapted for the engagement therewith of the reciprocated spring-pawl F. The pawl F is attached to the sliding bar I, arranged at the inner side of the cover E, the said bar being loosely attached to the cover by means of the slots *e e*, formed in the bar, and the screw-studs *f f*, suitable connection being made with the reciprocating sliver-guide J of the drawing-frame by means of the arm K, which is secured at one end in the extended base *n* of the sliver-guide J, the opposite end of the said arm being loosely held between the pendent ears *g g* of the sliding bar I, whereby the cover E may be turned upward on its hinges *h* without causing the disconnection of the arm K from the bar I.

Reciprocating movement is imparted to the guide J in drawing-frames by means of a reciprocated rod L, to which the guide J is attached, the said guide being held for movement in the slot *i* of the table A'. A frictional spring or stationary pawl M may be attached to the front outer side of the cover E to bear upon the edge of the clearing-disk D to prevent the backward movement of the disk during the backward movement of the spring-pawl F, so that the disk will be rotated intermittently in a forward direction.

The frictional spring or pawl M may be dispensed with, and in this case the connecting-spring F, arranged in engagement with the disk D, will serve to impart thereto a slight rotary movement first in one direction and then in the opposite direction, and a more extended range of back-and-forth rotary movement may be obtained by providing the disk D with the gear-teeth *j*, engaging with the teeth of a rack *k*, formed at the end of an arm *m*, which projects from the inner side of the reciprocating bar I, as shown in Fig. 4, the rotary movement so obtained serving to cause the felting together of the collected waste upon the face of the clearing-disk by varying the angle of its presentation to the action of the rolls.

I do not in this application make a broad claim to the employment of rota ary clearing-disk for drawing-rolls, the same having been claimed by me in my prior application, Serial No. 607,147.

I claim as my invention—

1. The combination of the drawing-rolls, and the rotary clearing-disk bearing upon the rolls, with ratchet means for imparting rotary movement to the clearing-disk, substantially as described.

2. The combination of the drawing-rolls, and the rotary clearing-disk arranged to bear upon the rolls, with a movable frame or cover for supporting the disk, and reciprocated means for imparting rotary movement to the disk, substantially as described.

3. A rotary clearing-disk provided at its bearing side with a waste-collecting covering, and having a circularly-arranged series of engaging teeth as a means for imparting rotary movement to the disk, substantially as described.

JAMES THOMSON, JR.

Witnesses:
SOCRATES SCHOLFIELD,
JAMES W. BEAMAN.