B. F. DOUGLASS.

COLLAPSIBLE TENT FRAME.

APPLICATION FILED DEC. 17, 1912.

1,082,937. Patented Dec. 30, 1913.

2 SHEETS—SHEET 1.

Fig. I.

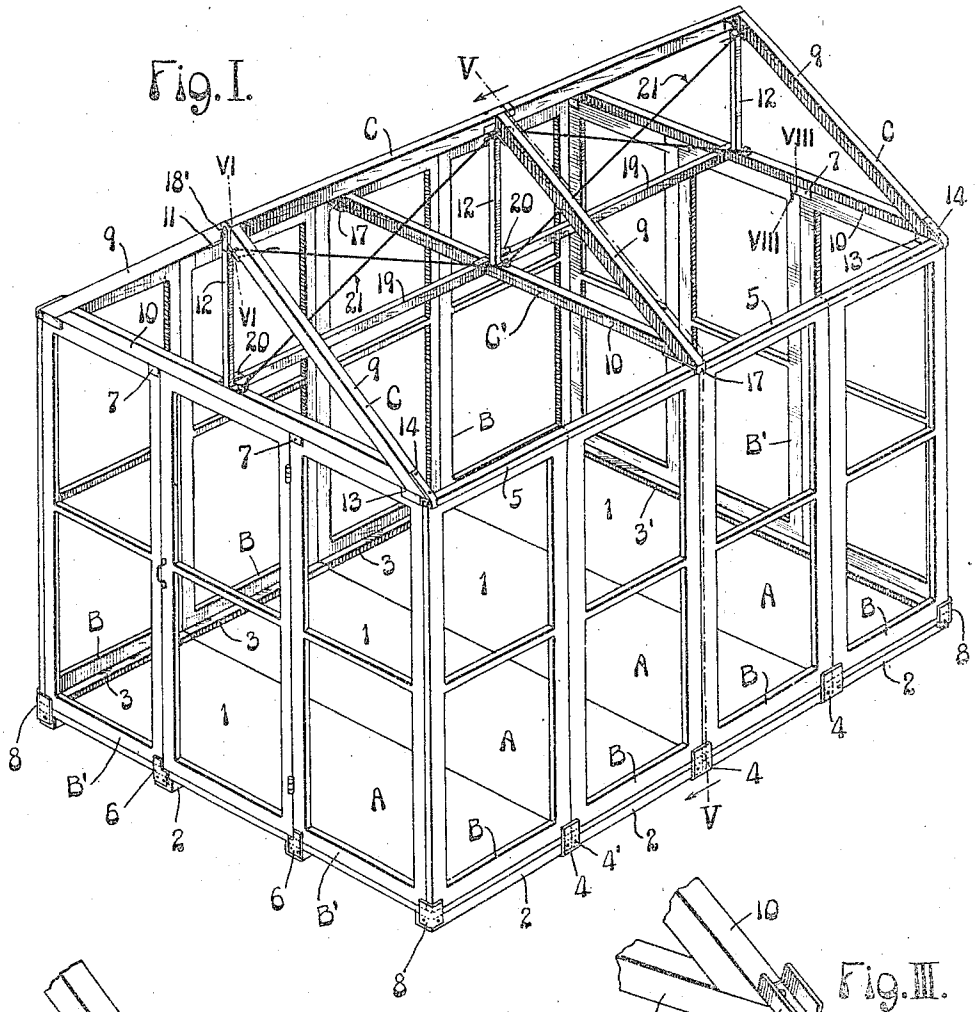

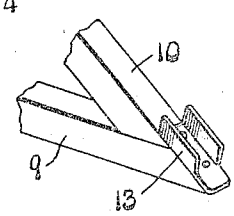

Fig. III.

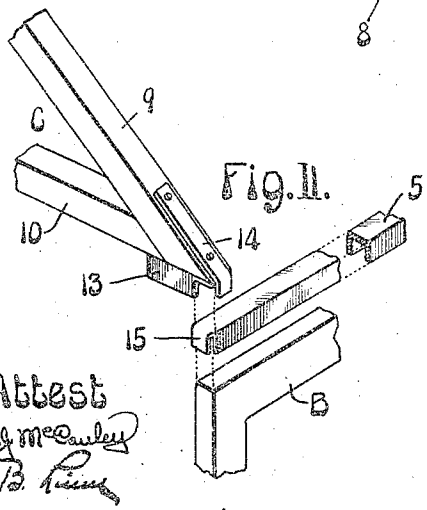

Fig. II.

Fig. IV.

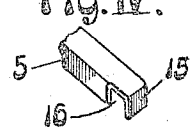

Attest

A. J. McCauley

E. B. Lines

Inventor:

B. F. Douglass

by Knight & Cook Att'ys.

B. F. DOUGLASS.

COLLAPSIBLE TENT FRAME.

APPLICATION FILED DEC. 17, 1912.

1,082,937.

Patented Dec. 30, 1913.

2 SHEETS—SHEET 2.

Fig. VI.

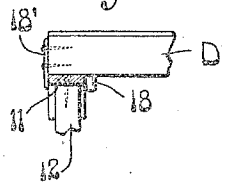

Fig. VII.

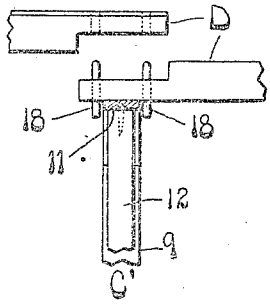

Fig. V.

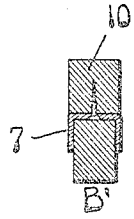

Fig. VIII.

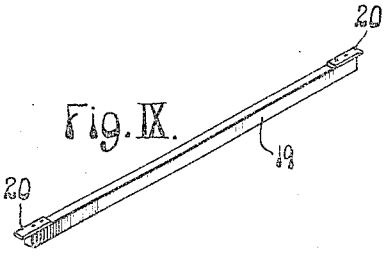

Fig. IX.

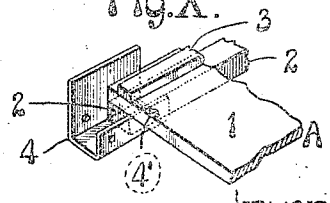

Fig. X.

Attest

A. J. McCauley

E. B. King.

Inventor:

B. F. Douglass

by Knight & Cook

Att'ys.

UNITED STATES PATENT OFFICE.

BENJAMIN F. DOUGLASS, OF ST. LOUIS, MISSOURI.

COLLAPSIBLE TENT-FRAME.

1,082,937. Specification of Letters Patent. Patented Dec. 30, 1913.

Application filed December 17, 1913. Serial No. 787,179.

To all whom it may concern:

Be it known that I, BENJAMIN F. DOUGLASS, a citizen of the United States of America, and a resident of the city of St. Louis and State of Missouri, have invented certain new and useful Improvements in Collapsible Tent-Frames, of which the following is a full, clear, and exact description, reference being had to the accompanying drawings, forming a part of this specification.

My invention relates to a collapsible tent frame, and has for its object the production of a collapsible frame of this kind composed of light sections which may be readily transported and easily assembled to, when suitably covered, produce a strong, durable and habitable tent structure.

Figure I is a perspective view of my collapsible tent frame. Fig. II is a fragmentary perspective view showing the elements at one corner of the frame. Fig. III is a perspective view of a fragment of one of the rafter sections inverted showing the pocket member on the bottom face of said section. Fig. IV is a detail view of the end portion of the channel binder bar which unites the upper ends of the side wall units. Fig. V is a vertical section taken approximately on the line V—V, Fig. I. Fig. VI is a section taken approximately on the line VI—VI, Fig. I. Fig. VII is a detail view, showing the overlapping ends of the ridge pole sections and a portion of the middle rafter section. Fig. VIII is a section taken on the line VIII—VIII, Fig. I. Fig. IX is a detail view of one of the braces that lie between the rafter sections. Fig. X is a detail view showing a portion of one of the floor sections and the pocket member associated therewith.

In the accompanying drawings: A designates the floor sections, each of which comprises flooring 1, short sill sections 2, and transverse abutment strips 3 on top of the flooring adapted to engage the inner face of side wall units B. The end floor sections are provided with longitudinal abutment strips 3′ engaging the wall units B′. The short sill sections 2 at the sides of the tent frame abut against each other, and are connected by channel shaped pocket members 4, having upturned inner and outer flanges, the latter of which extend above the abutments on the flooring and the lower ends of the side wall units, as seen most clearly in Figs. I and V.

4′ designates bolts securing the channel shaped pocket members 4 to the sill sections 2.

The side wall units B are rectangular frames abutting each other and adapted to be covered with canvas, screen, or any other suitable material. The lower ends of said side wall units are seated on the floor sections and arranged between the abutment strips 3 and the upturned outer flanges of the pocket members 4. It will be noted that these outer flanges and abutment strips interlock the wall units with the floor sections. The upper ends of the side wall units B are united by channel binder bars 5, extending from end to end of the tent frame and interlocked with said wall units, said channel binder bars having their flanges downturned to straddle the upper ends of the wall units and hold them upright and assembled independently of the roof structure above the walls of the tent frame.

The end wall units B′ are seated on the end floor sections between the abutment strips 3′ and retaining plates 6, said plates being secured to the end floor sections. One of the end wall units may be in the form of a door, as shown in Fig. I; and in this event, the retaining plates 6 are cut away to permit the door to swing outwardly. The upper ends of the end wall units are united to the roof frame by inverted channel members 7 secured to the roof frame and straddling said wall units, as shown in Fig. VIII. Angle plates 8 at the lowest corners of the tent frame are secured to the floor sections and extended outwardly therefrom so as to overlap and unite the wall units B and B′.

The roof structure comprises end rafter sections C and an intermediate rafter section C′, each of said rafter sections being composed of a pair of inclined rafters 9, connected at their lower ends by a tie beam 10. The upper ends of the inclined rafters are connected by a metal strap 11, and a king post 12 is interposed between said strap and the tie timber 10.

13 designates inverted metallic channel members interlocking corners of the roof frame with the end wall sections, said channel members being secured to the rafter sections, as seen most clearly in Figs. II and III. The ends of the rafter sections C are

also provided with metallic straps 14 having downturned ends which overlap the channel bar 5 at the upper ends of the side wall units B. The webs of the long channel bars 5 are bent downwardly forming abutment legs 15 to overlap the vertical edges of the endmost side wall units B as shown in Fig. II to hold said units from endwise movement and the inside flanges of said channel bars are cut away at 16, (Fig. IV), to permit said endmost side wall units to engage the adjacent end wall units B'.

To unite the middle portion of the roof frame to the side wall units, the ends of the intermediate rafter section C' are provided with metal straps 17 having downturned flanges which overlap the wall units B' (see Figs. I and V).

The ridge pole D is arranged between the upper ends of the rafters 9, and seated on the metal straps 11. To interlock the ridge pole with the rafter sections, pins 18 are secured to the ridge pole so as to embrace straps 11, and at the ends of the ridge pole I attach small metal plates 18' which extend downwardly to a point below the metal straps 11 on the end rafter sections. The ridge pole is preferably composed of two sections, which overlap each other at the middle of the roof, and the pins 18 at this point serve as dowels for connecting the overlapping ridge pole sections. (See Fig. VII.)

Horizontal longitudinal braces 19 provided with fingers 20 rest upon and abut against the tie beams 10 to stiffen the roof structure. The rafter sections are adjustably connected by diagonal tie wires 21 which are tightened after the roof structure elements are assembled, thereby forcing the transverse tie beams of the rafter sections against the ends of the braces 19.

The various sections of my tent frame may be very easily assembled or taken apart, and when the tent frame is to be packed for shipment, the floor sections may be utilized as a crate for inclosing the wall units, rafter sections, ridge pole sections, and the horizontal braces 19.

I claim—

1. A portable tent frame comprising side and end wall units abutting against each other, a roof frame seated on said units, channel shaped members secured to the roof frame and straddling the top corners of said end wall units, and bars secured to the corners of the roof frame and overlapping the side wall units, the said bars and members thus coöperating to interlock the roof frame with the side and end wall units.

2. A portable tent frame, comprising floor units abutting against each other and having short sill sections, channel shaped pocket members straddling said short sill sections and overlapping their abutting ends, each of said pocket members having an upturned outer flange, an abutment strip secured to said floor units, and wall units seated on said floor units between said flanges and abutment strips.

B. F. DOUGLASS.

In the presence of—
A. J. McCauley,
E. B. Linn.