May 4, 1965 R. H. ENSIGN 3,181,734

CONTAINER STRUCTURE

Filed May 14, 1962 2 Sheets-Sheet 1

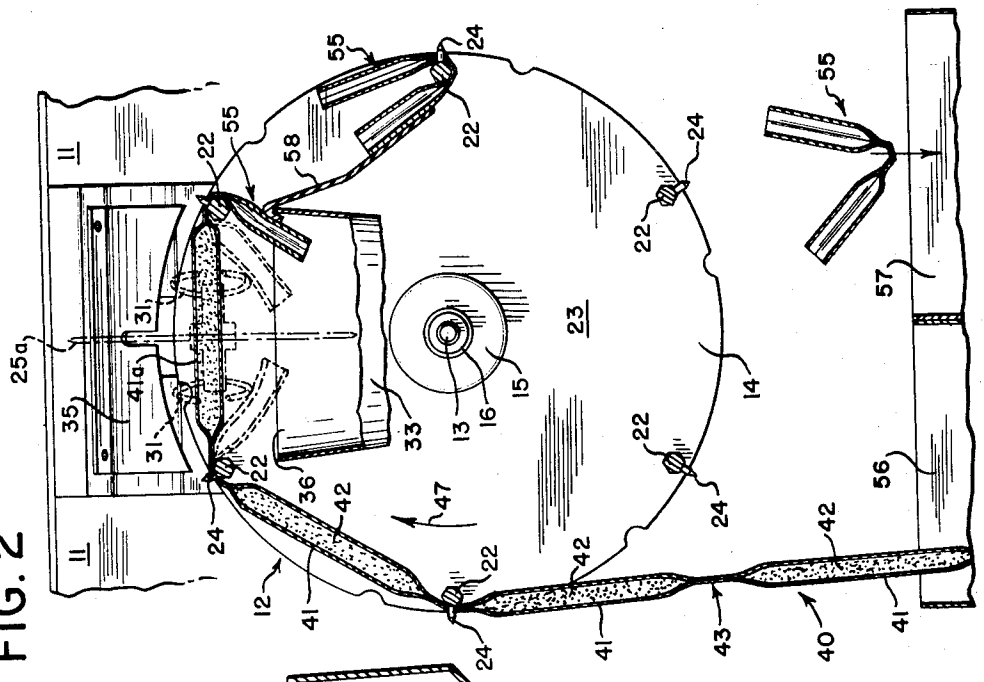

FIG. 2

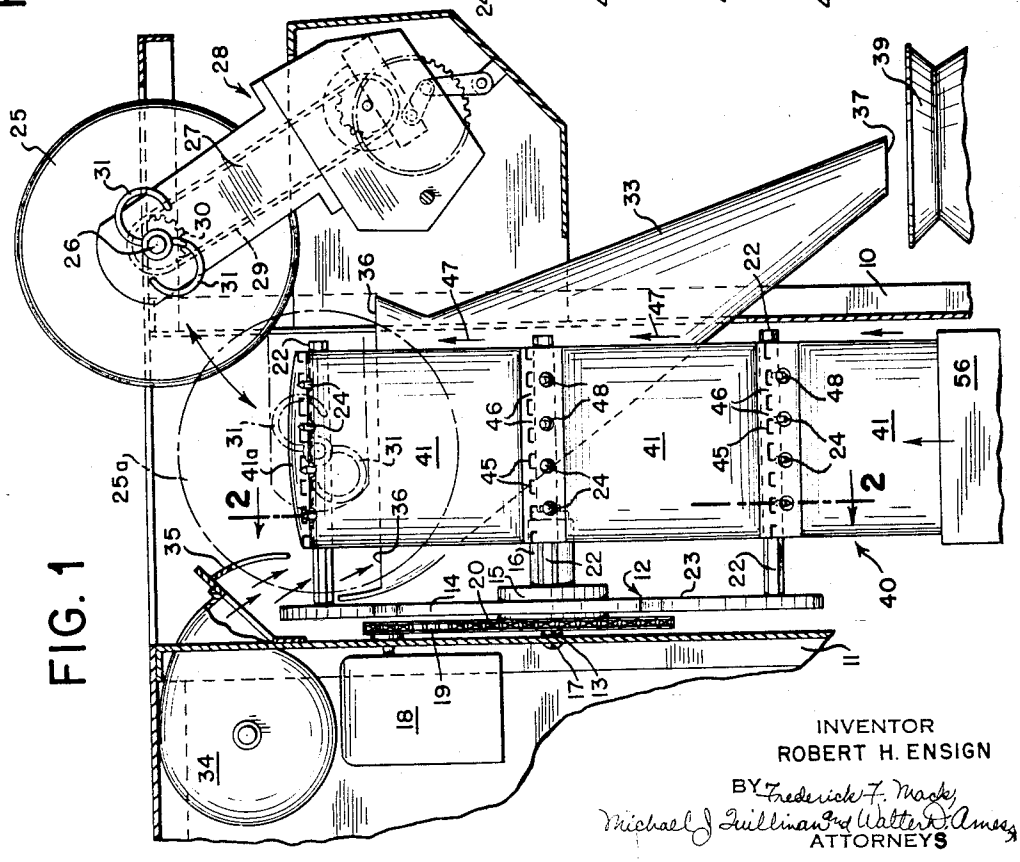

FIG. 1

INVENTOR
ROBERT H. ENSIGN

BY Frederick F. Mack,
Michael J. Sullivan 3rd & Walter D. Ames
ATTORNEYS

May 4, 1965 R. H. ENSIGN 3,181,734

CONTAINER STRUCTURE

Filed May 14, 1962 2 Sheets-Sheet 2

FIG. 4

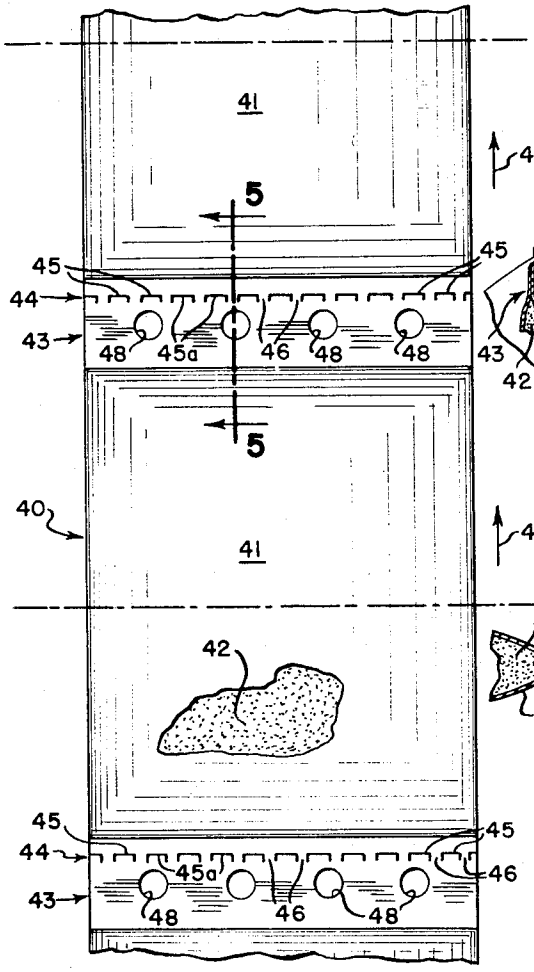

FIG. 3

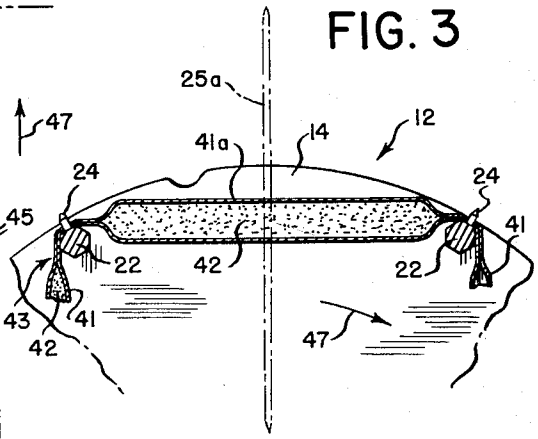

FIG. 5

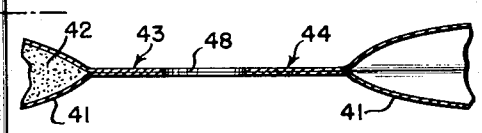

FIG. 6

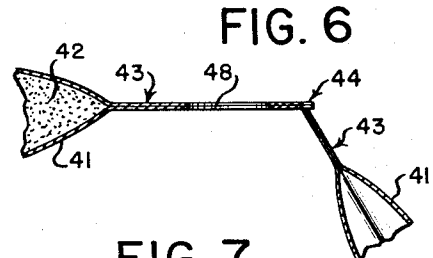

FIG. 7

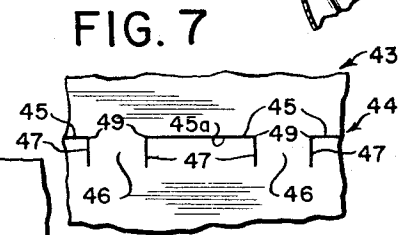

FIG. 8

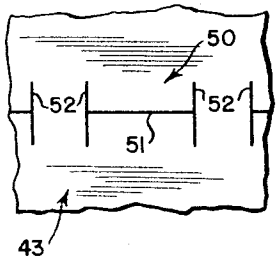

FIG. 9

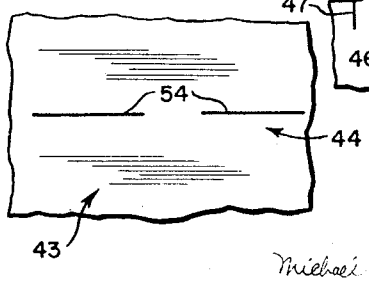

INVENTOR
ROBERT H. ENSIGN
BY Frederick F. Mack
Michael J. Guillemin and Walter D. Ames,
ATTORNEYS

United States Patent Office 3,181,734 Patented May 4, 1965

3,181,734

CONTAINER STRUCTURE

Robert H. Ensign, Bronxville, N.Y., assignor, by mesne assignments, to General Foods Corporation, White Plains, N.Y., a corporation of Delaware

Filed May 14, 1962, Ser. No. 194,498
12 Claims. (Cl. 222—83.5)

This invention relates to a novel container, and more particularly to a package having segregated quantities of a material stationed therealong.

The container of this invention is particularly adapted for use with a specific apparatus, although it can be utilized for other functions where separate amounts of a material, such as soluble coffee, are desired. The specific device with which the present container may be used is illustrated and described in U.S. patent application Serial No. 85,080, filed January 26, 1961, in the names of Milton Immermann et al. and entitled, "Beverage Apparatus." That apparatus is adapted for the facile preparation and dispensing of hot beverages, particularly coffee, and comprises a container for heating water to its boiling point, a receiving chamber to which the water is directed, a package holding measured amounts of soluble coffee, means for positioning the package above the receiving chamber, and means for opening the package at that position and releasing the coffee for passage into the chamber. The package to which the present disclosure is directed is an improvement over the package described in the prior application.

The specific embodiment of the package described in the prior application is an elongated belt which has pouches holding soluble coffee and spaced longitudinally along the belt. The pouches are separated by flexible belt portions. The package is positioned above the receiving chamber by means of a rotatable reel which moves the package through the use of pins located on the periphery of the reel and adapted to enter apertures formed in the flexible portions of the belt. When a pouch is located above the receiving chamber, a knife blade severs the pouch so that the coffee contained therein is free to fall by gravity into the chamber. The knife blade moves downwardly across the pouch location and then is retracted to its initial position until rotation of the reel brings another pouch of the continuous belt into position below the kinfeblade. The severed ends of the pouches are retained on the peripheral pins of the reel until, upon further rotation of the reel, these ends fall by gravity into a discharge receptacle positioned to receive them.

While operation of the apparatus disclosed in said application Serial No. 85,080 has on the whole proved highly efficacious and successful, some difficulties have been encountered when the material from which the belt is formed is highly resilient in nature. When belts formed from such resilient material have been utilized, it has been found that there is an occasional tendency for the severed portions of the belt which remain after the knife has sliced through pouches to assume an improper position on the pins of the rotatable reel which carries them. If, due to their inherent resilience, the severed portions of the belt spring back so that they almost reassume their position prior to having been depressed and bent, in its retraction the knife blade may accidentally contact the severed belt portions and lift them permaturely from their retaining pins. In such a case the severed portions may fall into the path taken by the soluble coffee after its release from the pouch and thus prevented the coffee from reaching the receiving decanter. If the resilient severed belt portions are not contacted by the knife blade, their center of gravity will nevertheless be shifted as they move away from depressed position so that, upon further rotation of the reel, the severed portions may be

discharged prematurely and not at that predetermined location at which they will fall into the discharge receptacle position to receive them. In either case, operation of the beverage apparatus which makes use of packages containing pouches of water-soluble beverage material can be seriously effected by the removal of the severed belt portions prior to their discharge into the receptacle stationed to receive them. Yet many belt materials which are desirable to use have been found to possess such inherent resiliency that premature discharge of several belt portions will occur occasionally.

It is, therefore, a primary object of the present invention to provide a package for retaining individual quantities of a beverage product, which package has zones along which it will tend to flex and once having flexed will tend to remain in or substantially near the position into which it has been brought by such flexure.

According to my invention, the package is in the form of a belt having disposed along its length a plurality of spaced holding means each of which is adapted to retain a quantity of the product to be dispersed. Between each of the holding means, which are preferably in the form of pouches, are belt portions which are flexible and have formed therein weakened zones that extend in a generally lateral direction across the belt portions. Upon flexure of the belt at these weakened zones, the belt will tend to remain in flexed position because the resilience of the belt at those zones has been enervated to a large extent. In a preferred embodiment of the invention, the belt zones are weakened by providing an aligned series of cut lines which are spaced and extend endwise across the belt at the zone. These cut lines may be substantially straight, or may be in form of a U or an H in order to make certain of the longitudinal dimension of the cut lines.

Since the package according to the present invention is particularly adapted for use with the described beverage apparatus, the package advantageously has formed therein suitable means for cooperating with the reel of that apparatus and, in particular, with the pins which are located in spaced rows along the periphery of the reel. Therefore, a row of apertures is provided in each portion of the belt to receive the pins which serve as the belt-propelling means on the rotatable reel of the beverage apparatus. Such apertures, which are in registration with the aligned pins on the periphery of the reel, are preceded by the weakened zone of the same belt portion with respect to the direction of movement of the belt, i.e., the weakened zone of each belt portion preferably leads the apertures formed in that belt portion. By means of such a package structure, severed belt parts formed after the pouches have been cut will not tend to spring up after having been depressed by the knife blade of the beverage apparatus, but will remain a depressed position, in which they are draped around and over the pins of the reel. The severed parts remain on the pins until the reel has rotated to such an extent that the parts are discharged by gravity into the discharge receptacle.

These and other objects, features and advantages of the present invention will be more readily understood when taken in connection with the illustration of the invention in the accompanying drawings, which form a part hereof, and in which:

FIG. 1 is a side elevational view of parts of a beverage making apparatus utilizing my package, with the package disposed in propelled position on the reel of the apparatus;

FIG. 2 is a vertical sectional view in the direction of the arrows 2—2 of FIG. 1;

FIG. 3 is an enlarged, vertical sectional view of a pouch of the package on the reel in position to be severed by the knife blade of the apparatus;

FIG. 4 is an enlarged, top plan view of the preferred embodiment of the package of the invention;

FIG. 5 is an enlarged sectional view along line 5—5 of FIG. 4;

FIG. 6 is a view similar to that of FIG. 5, with the package flexed along the weakened zone of the belt portion;

FIG. 7 is an enlarged plan view of the cut lines of the package embodiment of FIG. 4;

FIGS. 8 and 9 are enlarged plan views of two other forms of the cut lines of the invention.

Referring now to the drawings, and in particular to FIGS. 1 and 2 thereof, the apparatus which cooperates with the package of the present invention and which forms, in combination with that package, a part of the present invention, is supported by a frame including vertical structural members 10 and 11. Between these members a reel 12 is mounted for rotation about a fixed shaft 13. Reel 12 is composed of a vertically disposed, generaly circular plate 14, which is mounted on hub 15. Hub 15 rotates with respect to the shaft 13, such rotation being restricted by a collar 16 rigidly fixed to the shaft 13. Shaft 13 extends from frame part 11 with its axis in a substantially horizontal plane, shaft 13 being maintained in frame part 11 by means of an axial bolt 17.

Rotation of the circular plate 14 is accomplished by means of a reel motor 18, which has a driving gear which engages a chain 19 which itself cooperates with a sprocket wheel 20 immovably fixed to the rotary hub 15. Consequently, by means of chain 19 and sprocket wheel 20, rotary hub 15 and plate 14 are rotated by reel motor 18 about the shaft 13.

The structure of the reel 12 is completed by elongated bars 22 which extend toward the front of the apparatus from the forward, flat surface 23 of plate 14. Bars 22 are rigidly fixed to plate 14. A plurality of aligned pins or studs 24 are arranged so that one row of the pins is located on each bar 22 and extends radially outwardly therefrom. Each row of pins 24 has each of its pins so positioned with respect to corresponding pins on each of the other bars 22 that each pin is not only aligned in its own row, but also occupies a location on an imaginary circle the circumference of which includes one pin on each of the bars 22 of the reel 12. At all times during rotation of the reel 12, pins 24 project radially from the elongated bars 22.

Also illustrated in FIGS. 1 and 2 is the rotary knife blade 25 and its assembly 28, particular details of the operation of which are more fully described in said U.S. application Serial No. 85,080. Knife blade 25 is mounted on axle 26 for rotation therewith, the axle rotating in transverse bores in the blade support 27. By means of the blade assembly 28, the blade support is pivotable so that the rotating blade 25 can be moved to a position illustrated by broken line 25*a* in which it contacts and severs the pouch of a belt positioned in cutting location and then returns to its original position. As illustrated, axle 26 on which knife blade 25 is mounted is actuated by means of a chain drive 29 which cooperates with a gear 30 fixed to axle 26. Also mounted on axle 26 for rotation with and on either side of knife blade 25 are a pair of flails or beaters 31, the function of which will be described in greater detail hereinafter. Likewise illustrated in FIG. 1 is a chute 33 positioned beneath the uppermost location of the reel 12, which chute directs and conducts product discharged from a severed pouch into a receiving chamber in the form of a decanter 39. The gravity flow of the discharged material is aided by means of a blower 34 which directs air past baffle 35 into the mouth 36 of chute 33, and through that chute from depending aperture 37 thereof into decanter 39.

A primary embodiment of the belt which is an important part of the package of the present invention is illustrated in FIG. 4. In this figure, it will be seen that belt 40 is formed with a plurality of pouches 41 spaced along its longitudinal dimension, each of the pouches serving to retain a predetermined quantity of a product which, in the embodiment illustrated and described hereing, is soluble coffee 42. Portions of the belt 40 between each of the pouches 41 are identified in the drawings by reference numeral 43.

Belt portions 43 each include a weakened zone, indicated generally by reference numeral 44, at which zone are located a row of cut lines 45. All the cut lines 45 lie substantially in the same plane and are separated from each other by uncut portions 46. Cut lines 45 extend endwise laterally across belt portions 43 at zone 44. Belt portions 43 also have formed therein a plurality of aligned apertures 48 which correspond in size and number with pins 24 of bars 22 of reel 12. It will be noted that apertures 48 of belt portions 43 are located on the same side of their respective zones 44, i.e. they are preceded in the direction of movement (indicated by arrows 47 in FIGS. 1 to 4) of the belt 40 by weakened zones 44.

As will be more apparent from further reference to FIGS. 1 and 2, the coaction of the apertures 48 of belt 40 with pins 24 is such that, since the pins and apertures are in registration, the belt 40 will be propelled about reel 12 by the pins 24. As so propelled, belt 40 is disposed so that a pouch 41 is brought into a position in which it overlies the mouth 36 of chute 33. At such location the pouch 41*a* (FIG. 2) is subject to severing by knife blade 25 when that blade is in the position illustrated by broken line 25*a*.

Cut lines 45 which extend across belt portion 43 at zone 44 provide a weakened region at which the resilience of the material from which belt 40 is formed is substantially depleted. The position of belt portion 43 prior and subsequent to bending is well illustrated in FIGS. 5 and 6. In FIG. 5 it will be seen that immediately prior to contact of belt 40 with the reel 12, the belt portion 43 may be maintained in a substantially horizontal position. Subsequent to that contact with reel 12, upon flexing of belt 40 at weakened zone 44, the belt portion 43 bends along the cut lines 45. Such bending occurs as knife blade 25 severs pouch 41*a* at the top of the reel 12. Once having been depressed, the severed portions, which are indicated generally by reference numeral 55 in FIG. 2, are maintained in their bent, depressed position so that they are retained on the pins 24 of a bar 22 until they reach a discharge position on further rotation of reel 12. In addition, the severed belt portions 55 are pressed out of the way of the knife blade 25 when that blade moves to sever a pouch 41*a*, and remain out of the way of the knife blade 25 when its assembly 28 returns it to the position indicated by an unbroken line 25 in FIG. 1. Depression of the severed portions 55 is assisted by the action of flails 31 which beat the severed portions to remove all the coffee therefrom and at the same time ensure that the portions will be bent downwardly.

A great enlarged view of cut lines 45 is seen in FIG. 7, wherein it will be apparent that each cut line 45 is in the shape of an inverted U with the base 45*a* of the U elongated, the sides 47 of the U shortened and the junctures between base 45*a* and sides 47, which junctures are designated by numeral 49 squared. Sides 47 of cut lines 45 serve to precisely delimit the ends of the cut lines in order to ensure that the base 45*a* of each cut line extends the desired distance.

The embodiment illustrated in FIG. 8 shows a plurality of cut lines 50 each formed with an elongated base 51 and side members 52, which extend from the terminals of base 51 in a direction substantially normal to base 51 away from the terminals of base 51 to form an H. Sides 52 of each cut line 50 also enable the terminal of each cut line to be located with greater precision. In FIG. 9 an embodiment of the present reference is illustrated in which cut lines 54 are merely in the form of straight lines extending endwise across the pouch 40 at zone 44,

cut lines **54** being spaced from each other by such a distance as will result in a material weakening of the resilience of pouch **40** at the zone **44**.

In operation, a belt **40** having cut lines in accordance with the embodiment illustrated in FIGS. 7, 8 or 9 is attached to reel **12** by the manual disposition of the belt so that the first row of apertures **48** is located over a row of pins **24**, pins **24** extending through apertures **48** in registration therewith and thereby grasping belt portion **43**. The belt is stored in container **56**. Upon rotation of the reel **12**, the belt **40** is moved to a position in which one pouch **41***a* is disposed under and in position to be severed at a central portion thereof by rotating knife blade **25**. Blade assembly **28** is now actuated to pivot blade support **27** and blade **25** so that as the latter rotates on axle **26**, blade **25** assumes the position indicated by broken line **25***a* in FIGS. 1 and 2, thereby releasing the product, namely, soluble coffee, from pouch **41***a* and permitting same to fall by gravity, assisted by blower **34**, into mouth **36** of chute **33**, from whence the coffee is directed into decanter **39**.

By virute of weakened zone **44** of pouches **41** portions **55** of pouches which have been cut by knife blade **25** remain in a depressed, bent position about their respective bars **22** and out of the way of knife blade **25** and flails **31** when knife blade assembly **28** reelevates blade **25** after the severing operation. Flails **31** additionally serve to beat the severed portions of the pouches and keep them in a position out of the way of the knife blade and draped closely about their respective bars **22**. As the reel **12** is further rotated to bring additional pouches **41** into position occupied by pouch **41***a*, the severed portions **55** will be rotated until they reach that position at which they fall by gravity from their pins into discharge receptacle **57**. Because of the lack of resilience in the bent, severed pouches **55**, the pouches have not been permaturely discharged from their respective bars **22** before the severed portions were located in a position to fall by gravity into discharge receptacle **57**.

As seen in FIG. 2, severed pouch portions **55** are maintained in a position in which they will fall by gravity from the bar **22** by means of a guide **58** attached to the chute **33** and extending outwardly from the mouth **36** of that chute. The leading portion of a pair of severed portions **55** remains in contact with guide **58** as the reel **12** rotates, so that the severed portions **55** do not depend from and pivot about their bar **22**. Instead, portions **55** are held above their bar **22**, free to drop therefrom when the reel **12** has rotated so that that bar is at least in a 90° position with respect to the top of the reel **12**.

The present structure of a package in the form of a continuous belt having a multiplicity of pouches spaced along its length permits a continuous supply of pouches to be withdrawn from supply container **56**, brought to severing position and then discharged into receptacle **57** without the requirement of human agency, except to energize the electrical circuit which actuates the knife blade **25**, blade assembly **28** and reel motor **18**. Such an electrical circuit together with the means whereby the reel is caused to rotate only through that angle necessary to move another pouch into location **41***a* are all described in detail in U.S. patent application Serial No. 85,080. The present invention is limited to the structure of the package and the novel combination of parts of the beverage apparatus with that package. The combination, as pointed out hereinbefore, results in an apparatus with improved operability and superior freedom from malfunction.

It will be apparent that certain alterations and modifications of the package and apparatus as described hereinbefore and illustrated in the drawings will be obvious to those skilled in the art. All such obvious changes are deemed to be included within the purview of the present invention, which is to be limited only by the scope of the following, appended claims.

What is claimed is:

1. A container adapted to retain a fluent product, comprising a belt formed from material having a degree of inherent resilience and having disposed along its length a plurality of holding means in the form of closed pouches each of which is adapted to retain a quantity of said product, said holding means being spaced from each other to form a flexible resilient belt portion between each of said holding means, said belt at said portion having a weakened zone extending in a generally lateral direction across said belt, said zone being discontinuous in said lateral direction to mitigate the resilience of said belt at said zone so that when said belt is bent at said zone it will tend to retain its bent position instead of returning to its original shape, said belt portion being formed with a plurality of apertures between adjacent pouches located outside and parallel to said zone and adapted to receive a belt propelling member.

2. A container adapted to retain a fluent product, comprising a belt formed from material having a degree of inherent resilience, said belt having disposed along its length a plurality of holding means in the form of closed pouches coextensive in width with said belt each of which is adapted to retain a quantity of said product, said holding means being spaced from each other forming between each of said holding means a flexible resilient belt portion containing a plurality of pin-engaging apertures spaced laterally across said belt portion, said belt at said portion having a weakened discontinuous zone extending generally laterally across said portion at a location longitudinally removed from said apertures and marked by spaced cut lines disposed endwise across said zone, said cut lines dividing said zone into regions on either side of said cut lines, said portion being adapted for bending at said weakened zone, said weakened zone being deformed by said bending to separate said regions at said cut lines and thereby mitigate the resilience of said belt at said portion so that when said belt is bent at said zone it will tend to retain its bent position instead of returning to its original shape.

3. A container as claimed in claim 2, in which there are a multiplicity of spaced apertures in alignment outside said zone and extending laterally across said belt at said portion to receive belt propelling members.

4. A container as claimed in claim 2, in which said cut lines lie substantially in a straight line normal to the longitudinal axis of said belt.

5. A container as claimed in claim 2, in which each of said cut lines is in the general form of a U.

6. A container as claimed in claim 2, in which each of said cut lines is in the general form of an H.

7. A device for releasing a fluent product from a package, comprising a reel rotatable to bring successive points on its periphery to a predetermined location; package holding means on the periphery of said reel; a package for retaining a product and including a belt formed from material having a degree of inherent resiliency and having disposed along its length a plurality of holding means in the form of closed pouches each of which is adapted to retain a quantity of said product, said holding means being spaced from each other to form a flexible belt portion between each of said holding means, said belt at said portion having a weakened zone extending in a generally lateral direction across said belt, said zone being discontinuous in said lateral direction to mitigate the resilience of said belt at said zone so that when said belt is bent at said zone it will tend to retain its bent position instead of returning to its original shape; cutting means movable across said location to sever said belt at said holding means and release said product therefrom; means for moving said cutting means across said location to sever said belt at said holding means; and means moving with said cutting means for bending said belt at the weakened zone of a belt portion adjoining said severed

holding means so that said belt will remain substantially in said bent position.

8. A device as claimed in claim 7, in which said package holding means includes a multiplicity of outwardly projecting pins and said belt is formed with a plurality of apertures in registration with and of such dimensions as to be adapted to cooperate with said pins.

9. A device as claimed in claim 7, in which said cutting means is a knife blade having at least one bail rotatable therewith in a location in which said bail strikes and bends said belt at said weakened zone.

10. A device for releasing a fluent product from a package, comprising a reel rotatable to bring successive points on its periphery to a predetermined location; package holding means on the periphery of said reel; a package for retaining said product, said package including a belt formed from material having an inherent resilience, said belt having disposed along its length a plurality of holding means in the form of closed pouches each of which is adapted to retain a quantity of said product, said holding means being spaced from each other to form a flexible resilient belt portion between each of said holding means, said belt at said portion having a weakened discontinuous zone extending generally laterally across said portion and marked by spaced cut lines disposed endwise across said zone, said portion being adapted for bending at said weakened zone, said weakened zone being deformed at said cut lines by said bending to mitigate the resilience of said belt at said portion so that when said belt is bent at said zone it will tend to retain its bent position instead of returning to its original shape; cutting means movable across said location, means for moving said cutting means across said location to sever said package at said holding means and release said product therefrom, and means

moving with said cutting means to bend said belt at said weakened zone of a belt portion adjoining said cutting means as it severes said holding means so that said last-named portion will not resiliently resume its original position.

11. A device as claimed in claim 10, in which said package holding means on said reel periphery includes a multiplicity of outwardly projecting pins and said belt portion is formed with a plurality of apertures in registration with and of such dimensions as to be adapted to cooperate with said pins, said apertures extending in substantial alignment laterally across said belt portion.

12. A device as claimed in claim 10, in which said cutting means is a knife blade having at least one bail rotatable therewith in a location in which said bail strikes and bends said belt at one of said weakened zones.

References Cited by the Examiner

UNITED STATES PATENTS

2,194,451	3/40	Soubier	206—56
2,660,324	11/53	Trautschold	214—305
2,765,005	10/56	Wellekens	222—83.5
2,772,009	11/56	Plusquellic	214—305
2,810,652	10/57	Armbuster.	
2,968,560	1/61	Goros	99—77.1
3,001,643	9/61	O'Meara et al.	202—56
3,047,347	7/62	Groves	221—25

FOREIGN PATENTS

513,038	8/52	Belgium.
786,188	11/57	Great Britain.

THERON E. CONDON, *Primary Examiner.*

EARLE J. DRUMMOND, *Examiner.*