Jan. 9, 1968 E. BECKER ET AL 3,362,131
PROCESS FOR SEPARATING GASEOUS OR VAPOROUS SUBSTANCES, ESPECIALLY ISOTOPES
Filed March 9, 1964 2 Sheets-Sheet 1

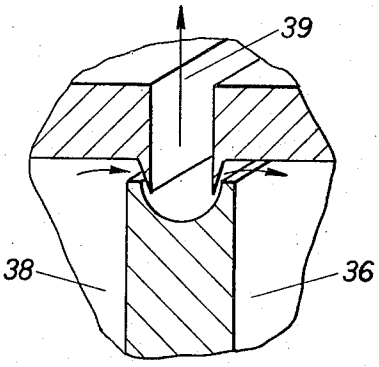

Fig. 2

Fig. 4

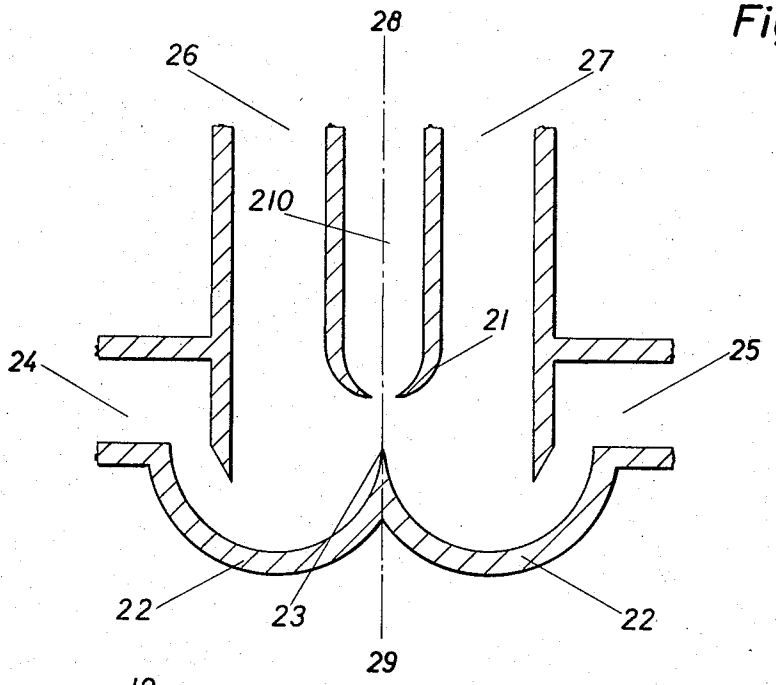

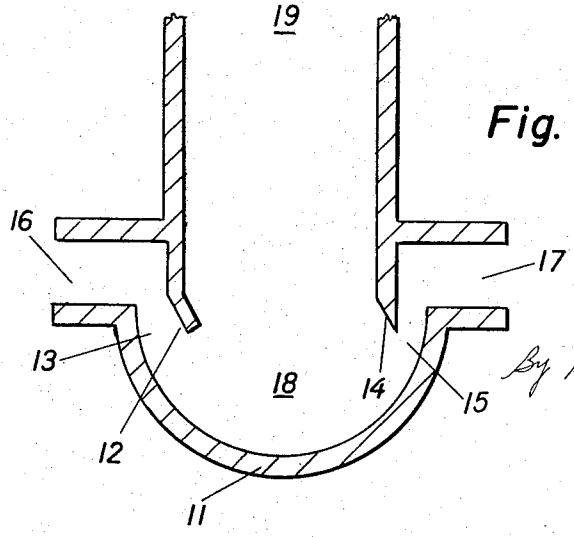

Fig. 1

INVENTOR:
ERWIN BECKER
By Burgess, Dinklage & Sprung
ATTORNEYS

Jan. 9, 1968 E. BECKER ET AL 3,362,131
PROCESS FOR SEPARATING GASEOUS OR VAPOROUS SUBSTANCES, ESPECIALLY ISOTOPES
Filed March 9, 1964 2 Sheets-Sheet 2

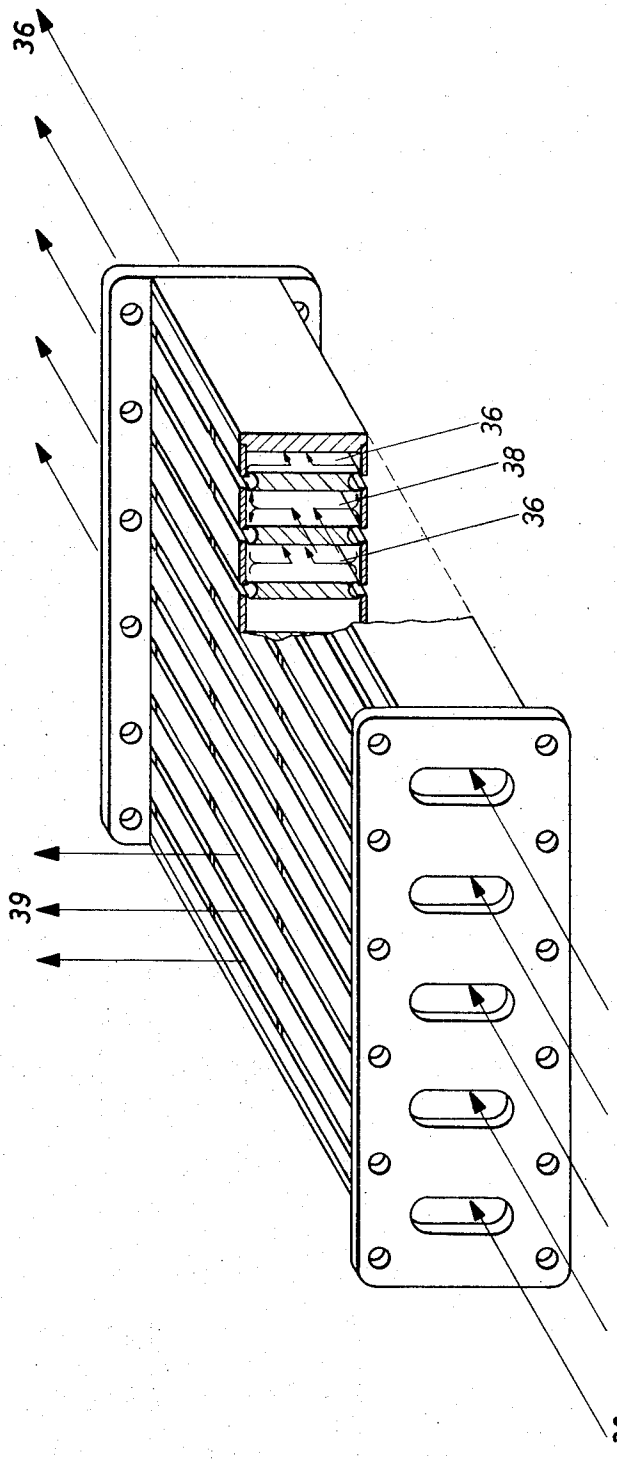

Fig.3

INVENTOR:
ERWIN BECKER

United States Patent Office 3,362,131
Patented Jan. 9, 1968

3,362,131

PROCESS FOR SEPARATING GASEOUS OR VAPOROUS SUBSTANCES, ESPECIALLY ISOTOPES

Erwin Becker, Karlsruhe, Germany, assignor to Gesellschaft für Kernforschung m.b.H., Karlsruhe, Germany, a corporation

Filed Mar. 9, 1964, Ser. No. 350,506
Claims priority, application Germany, Mar. 9, 1963, K 49,161
9 Claims. (Cl. 55—17)

The invention refers to a process for separating gaseous or vaporous substances, especially isotopes, having different molecular weight and/or different gas kinetic cross sections. The mixture flows out of a nozzle-type orifice onto a skimmer diaphragm which separates it into a peripheral portion and a core portion penetrating through the opening of the skimmer diaphragm. In the process the core portion generally becomes enriched in the heavy component.

This process, which is particularly useful for isotope separation, requires a relatively high expenditure in equipment. For this reason, a multitude of additional measures have been suggested in order to obtain more favorable economic conditions. One well-known suggestion amounts to a mechanical deflection of the jet generated out of the mixture to be separated after it has left the nozzle on its way to the skimmer diaphragm. The investigations published in literature show, however, that the economy of the separation nozzle process cannot be improved, which is obviously due to the disturbing effects linked with mechanical deflection.

According to the German patent specification No. 1,096,875, a light additional gas having much lower molecular or atom weights than the mixture is to be added to the mixture to be separated. This measure actually makes for some economic advantage in the intermediate mass range of mixtures. However, precisely in the mixtures of high mass ranges, which are especially important for practical application, e.g., at mean molecular weights exceeding 200, this process did not yield a distinct economic advantage, as could be proved by the corresponding investigations.

For this reason, it has been attempted already to equip the nozzles used for beam generation with fittings changing the orifice of the nozzle in such a way as to form at least two gas jets moving toward each other. This process may also be carried out with light gases added, but this still does not amount to any economic advantage in the range of high masses.

Another published experiment consisted in having the mixture to be separated flow into resting cylindrical, conical, or similar chambers having the shape of Guldin's bodies tangentially from the outside or under a small angle. This was to force the mixture into forming helical vortices rotating around the axis of the chamber and to be able to draw off the components separately in their arrangement by their density ratios. In one special embodiment of this process a light gas was added to the mixture to be separated. According to the published result this process is without any technical interest even when light gas is added, which is obviously connected with the high losses by friction or turbulence unavoidable in the generation of rotating helical vortices.

None of the different auxiliary measures described was thus able to furnish significant improvements of the well-known separation processes for gaseous or vaporous substances, especially isotopes, in the range of high masses, where the source mixtures flow out of nozzle-shaped orifices in the direction of skimmer diaphragms separating them into peripheral portions and core portions penetrating through the skimmer diaphraghm opening. Surprisingly enough, it has been found out that now by useful selection and combination as well as adaptations and corresponding development of originally well-known procedures considerable technical and economic progress can be achieved. According to the invention a lighter additional gas is added to the source mixture, and the jet or jets generated out of it are mechanically deflected by less than 360° after leaving the nozzle or nozzles on the way to the skimmer diaphragm.

Further details of the invention are explained on the basis of the drawing.

FIG. 1 is a schematic end view, partly in section, of a gas mixture separating apparatus according to a preferred embodiment of the invention.

FIG. 2 is a schematic end view, partly in section, of a gas mixture separating apparatus according to another embodiment of the invention.

FIG. 3 is a perspective view, partly in section, of a gas mixture separating apparatus according to the invention which includes a plurality of gas mixture separating apparatus elements of the type illustrated in FIG. 1.

FIG. 4 is a detail view, partly in section, showing a typical portion of the apparatus illustrated by FIG. 3.

FIG. 1 shows a schematic section of a device for embodying the process according to the invention. This consists of a removal duct **19** for the peripheral portion of the gas one end of which is formed by nozzle plate **12** for the nozzle channel **13**, whereas the other free end at the same time serves as the skimmer plate **14**. For the mechanical deflection a deflecting plate **11** has been provided one end face of which, together with nozzle plate **12**, forms nozzle channel **13**. The mixture (source mixture and lighter additional gas) is fed into this nozzle channel via duct **16**. The second end face of deflecting plate **11** together with skimmer plate **14** makes up the skimmer channel **15** from which the core portion of the gas generally enriched in the heavy portion, is drawn off via duct **17**. Deflecting plate **11**, e.g., in the shape of a semi-cylinder, at the same time limits volume **18** where the peripheral portion of the gas accrues and is drawn off through removal duct **19**. The nozzle plate in the example shown in FIG. 1 has been shaped so as to form a Laval nozzle. However, it is possible to obtain good results also with convergent nozzles. The deflecting plate in the example chosen has been shaped so as to result in a mean jet deflection of nearly 180°. However, good results can also be obtained with a smaller deflection angle, such as 90°, or a larger one, such as 250°. As enlarging the angle of deflection beyond 360° is based on the generation of helical vortices which have been recognized to be detrimental, an angle of deflection below 360° should be maintained in any case.

In the device shown the skimmer diaphragm channel **15** has a nearly rectangular longitudinal cross section. However, it is possible to influence the backwash effect by narrowing or expanding the cross section in the direction of flow.

FIG. 2 shows a section of another way of embodying the device for executing the process of the invention. Here, two deflection plates **22** and **23** are opposed to one common convergent nozzle **21** with inlet duct **210**. The core portion of the gas is drawn off via ducts **24** and **25**, the peripheral portion via ducts **26** and **27**. The whole setup again can be expanded at random in the direction perpendicular to the plane of the drawing. In the setup shown in FIG. 2 a rotation-symmetrical embodiment is also possible in the way it results from rotating around axis **28–29** the section shown in FIG. 2. In that case ducts **24** and **25** on the one hand and ducts **26** and **27** on the other are united so as to form a ring conduit.

Experiments have shown that particularly favorable economic results can be obtained by employing a nozzle

the width of which is less than 1 mm. in the narrowest spot and a radius of curvature of the surface used for deflecting the beam is less than 5 mm. in the range essential for beam deflection. The radius of curvature need not be constant by far in the whole range essential for beam deflection. The most suitable shape can be detected in a relatively simple way by tests.

In the process according to the invention using mechanical beam deflection relatively high addition of light gas results in optimum economic conditions. Thus, above all, the addition of 1,000 mol percent or more light gas has proved to be successful in source mixtures having large mean molecular weights to be separated. The ratio of pressures in ducts **16**, **19** and **17** of FIG. 1 and **210**, **24**, **25** and **26**, **27** may be varied within relatively wide limits. However, it has become apparent that optimum separation effects can be attained already at relatively low pressure ratios, which again has particularly favorable effects on the economic side of the process. Thus, it is possible in many cases to obtain especially favorable economic conditions by retaining the pressure ratios in nozzle inlet duct **16** and removal duct **19** below 10 and the pressure ratio in nozzle inlet duct **16** and removal **17** below 5. The most feasible absolute pressure in the nozzle inlet duct depends upon the type of gas mixture used and can easily be ascertained by testing. Pressures of 1 to 0.05 atm. a. in the nozzle inlet duct have had particularly favorable economic results.

Of course, it makes no difficulty within the framework of the invention to connect several separating stages in series or in parallel. In series connection the different gas inlet and removal ducts had best be connected with each other in such a way—as shown in the German patent specification No. 1,096,875—that only jets of like composition of the source mixture to be separated can be united. This largely repairs the demixing effect of source mixture and additional gas apparent in the separating stages, thus helping to reduce essentially the amount of gas to be removed at one end of the cascade and the amount of additional gas to be fed in at the other end, which improves the economy of the system still further.

One particularly suitable embodiment of the connection in parallel of several separating stages is shown in FIGS. 3 and 4. Here ducts **38** for common supply of four slot-shaped nozzle channels each are connected in parallel to ducts **36** for common removal of the core portions out of four (two only in the lateral boundaries of the system) skimmer diaphragm channels each. Two removal ducts each surround one inlet duct and (apart from the lateral boundaries) two inlets ducts each surround one removal duct. The lateral cross-section then shows, as can be seen from FIG. 4, that a device according to FIG. 1 is arranged like a mirror image from channel to channel successively. The peripheral portions of the gas leave towards the top and the bottom through ducts **39** in FIG. 3 and are jointly collected in a gastight housing surrounding the whole separation stage, which is not shown in the figure. From this housing they may be drawn off through an attached pipe duct.

I claim:

1. A process for separating gaseous mixtures having constituents of different molecular weights, which comprises adding a gas of lighter molecular weight to an original gaseous mixture having at least two constituents of different molecular weight to form a composite gaseous mixture, passing said composite mixture through a nozzle to accelerate same in the form of a jet emerging from the nozzle, directing said jet to impinge upon a curved boundary to form a gaseous stream flowing therealong wherein the constituents of the composite gaseous mixture are stratified according to molecular weight, with the heaviest molecular weight constituent flowing in contact with said boundary, and separating said stratified gaseous stream into a high molecular weight gas stream and a low molecular weight gas stream by means of a deflecting plate extending into said stratified stream at a location thereof where the flow velocity thereat is diverted less than 360° with respect to the direction of the flow velocity of the jet from the nozzle.

2. The process according to claim **1** wherein the lighter molecular weight gas added to the original mixture is in the amount of at least 1.000 mol percent.

3. The process according to claim **1** wherein the composite gaseous mixture passed to the nozzle is at a pressure between 0.05 and 1.0 atmospheres absolute.

4. The process according to claim **1** wherein the pressure ratio between the composite gaseous mixture passed to the nozzle and the separated low molecular weight gas stream is below 10 and the pressure ratio between the composite gaseous mixture passed to the nozzle and the separated high molecular weight gas stream is below 5.

5. An apparatus for separating gaseous mixtures having constituents of different molecular weights, which comprises a first member having a concavely curved surface disposed to define a gaseous fluid stream flow boundary, means defining a nozzle disposed to receive a gaseous mixture having at least two constituents of different molecular weight and to accelerate such gaseous mixture to form a jet thereof directed to impinge upon said curved surface as it issues from the nozzle and without change of direction thereof and form a gaseous stream flowing along the boundary defined thereby, and wherein said gaseous mixture constituents are stratified according to their molecular weight, with the heaviest molecular weight constituent flowing in contact with said boundary surface, and means defining a deflection plate disposed for extension into such stratified gaseous stream to separate same into a high molecular weight gaseous stream and into a low molecular weight gaseous stream at a location on the stratified gaseous stream where the fluid flow velocity is diverted less than 360° with respect to the direction of the nozzle jet fluid flow velocity, and means for removing said separated constituent.

6. The apparatus according to claim **5** including a second member having a first surface and a second surface, and a third member having a first surface and a second surface, said first surface of the second member being disposed in opposite spaced apart relation to the curved surface of said first member and cooperating therewith to define said nozzle, said first and second surfaces of said third member being disposed for intersection to define said deflection plate, with said first surface of the third member being disposed in spaced apart relation to said first member curved surface to define therewith an outlet duct for the passage of said separated high molecular weight gaseous stream, and said second surfaces of the third and second members being disposed in spaced apart relation to each other to define an outlet duct for the passage of said separated low molecular weight gaseous stream.

7. The apparatus according to claim **5** wherein said nozzle means is disposed in endwise spaced apart relation to said curved surface of the first member to direct a gaseous mixture jet impinging thereupon and dividing into two gaseous streams oppositely flowing therealong, and wherein each stream, the constituents of the gaseous mixture are stratified according to molecular weight, with the heaviest molecular weight constituent flowing in contact with said curved boundary surface, and including a first lateral member and a second lateral member each having an inwardly facing surface disposed in spaced apart relation to each other and with respect to the nozzle means to define an outlet duct for the passage of said separated low molecular weight gaseous constituent, said first and second lateral members each having an outwardly facing surface disposed in spaced apart relation to said curved surface to define therewith a duplex outlet duct for the passage of said separated high molecular weight gaseous constituent, said first and second lateral members being each disposed for endwise extension into a corresponding

stratified gaseous stream to define respective deflection plates separating said stratified gaseous streams each into a high molecular weight gaseous stream and a low molecular weight gaseous stream at respective locations on said stratified streams where the fluid flow velocity is diverted less than 360° with respect to the nozzle jet fluid flow velocity, with said separated high molecular weight gaseous streams being passed through corresponding portions of said duplex outlet duct, and said low molecular weight gaseous streams being both passed through the common outlet duct defined by the inwardly facing surfaces of said lateral members.

8. The apparatus according to claim 6 wherein the width of the nozzle defined by the first surface of the second member and the curved surface of the first member is less than 1 mm. at its narrowest portion.

9. The apparatus according to claim 7 wherein the curved surface of said first member is a bifurcated surface having two adjoining concavely curved surface portions

disposed in symmetrical relation to the nozzle means to divide the gaseous mixture jet therefrom into two oppositely flowing stratified gaseous streams.

References Cited

UNITED STATES PATENTS

1,137,774	5/1915	Mazza	55—17

FOREIGN PATENTS

358,394	9/1922	Germany.
147,189	1/1922	Great Britain.
794,834	5/1958	Great Britain.
825,798	12/1959	Great Britain.

SAMIH N. ZAHARNA, *Primary Examiner.*

REUBEN FRIEDMAN, *Examiner.*

J. A. DEE, *Assistant Examiner.*