US00D679584S

(12) United States Design Patent

Wada et al.

(10) Patent No.: US D679,584 S
(45) Date of Patent: ** Apr. 9, 2013

(54) **PACKAGING CONTAINER**

(75) Inventors: **Kiyoshi Wada**, Hyogo (JP); **Masahiro Yoshida**, Osaka (JP)

(73) Assignee: **Toppan Printing Co., Ltd.**, Tokyo (JP)

(**) Term: **14 Years**

(21) Appl. No.: **29/417,148**

(22) Filed: **Mar. 30, 2012**

(30) **Foreign Application Priority Data**

Mar. 5, 2012 (JP) 2012-004882

(51) **LOC (9) Cl.** **09-03**

(52) **U.S. Cl.** **D9/420**

(58) **Field of Classification Search** D9/414, D9/417, 420–425, 429, 434, 503, 529, 387; D7/390, 302, 608, 612, 615; D28/73, 88; 215/200; 229/87.13, 160.1, 116.1; 206/265–270, 206/276, 457; 220/608, 669, 675, 676, 834–843
See application file for complete search history.

(56) **References Cited**

U.S. PATENT DOCUMENTS

D491,275	S	6/2004	Walters et al.	
D555,490	S *	11/2007	Liu	D9/549
D559,677	S *	1/2008	Laib	D3/302
D598,738	S *	8/2009	Supranowicz	D9/420
D599,032	S	8/2009	Bucholtz et al.	
D599,655	S *	9/2009	Friebe et al.	D9/420
D608,011	S	1/2010	Giraud et al.	
D621,951	S	8/2010	Bucholtz et al.	
D631,168	S	1/2011	Bucholtz et al.	
D644,336	S	8/2011	Belfance et al.	
D644,337	S	8/2011	Belfance et al.	
D644,739	S	9/2011	Belfance et al.	
D644,740	S	9/2011	John et al.	
D647,211	S	10/2011	Belfance et al.	
D649,658	S	11/2011	Belfance et al.	
D649,659	S	11/2011	Belfance et al.	
8,051,998	B1 *	11/2011	Giraud et al.	215/261
2006/0219727	A1 *	10/2006	Giraud	220/839
2008/0035658	A1 *	2/2008	Caulfield et al.	220/839
2011/0089187	A1 *	4/2011	Steiger et al.	220/839
2012/0055946	A1 *	3/2012	Caulfield et al.	220/839
2012/0055947	A1 *	3/2012	Caulfield et al.	220/839

FOREIGN PATENT DOCUMENTS

WO	DM/067982	8/2006

* cited by examiner

Primary Examiner — Thomas Johannes

(57) **CLAIM**

The ornamental design for a packaging container, as shown and described.

DESCRIPTION

FIG. **1** is a perspective view of a packaging container showing our new design;
FIG. **2** is a top view thereof;
FIG. **3** is a bottom view thereof;
FIG. **4** is a front view thereof;
FIG. **5** is a right side view thereof, with a left side view being symmetrical thereto;
FIG. **6** is a rear view thereof;
FIG. **7** is a sectional view thereof taken in the direction of line **7-7** in FIG. **2**;
FIG. **8** is a top view thereof with the lid open; and,
FIG. **9** is a perspective view thereof.
The broken line portion of the figure drawings is included to show unclaimed subject matter only and forms no part of the claimed design.

1 Claim, 3 Drawing Sheets

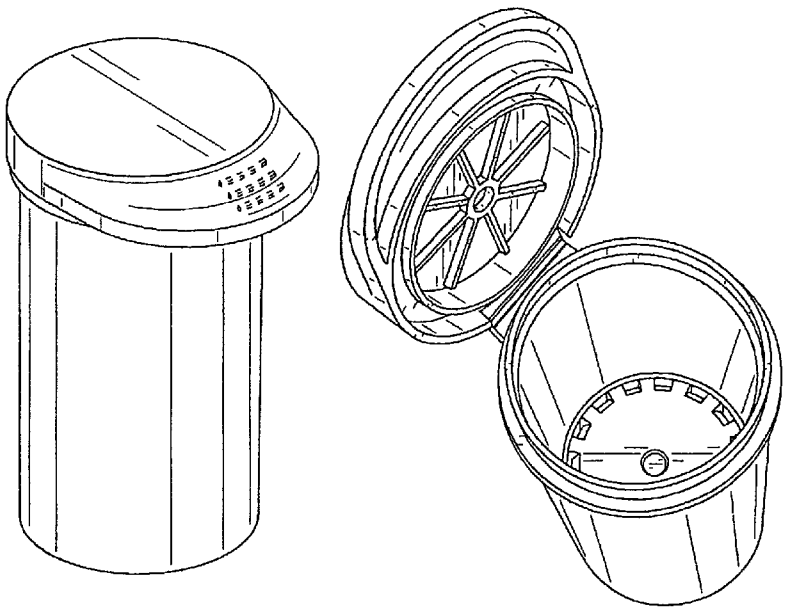

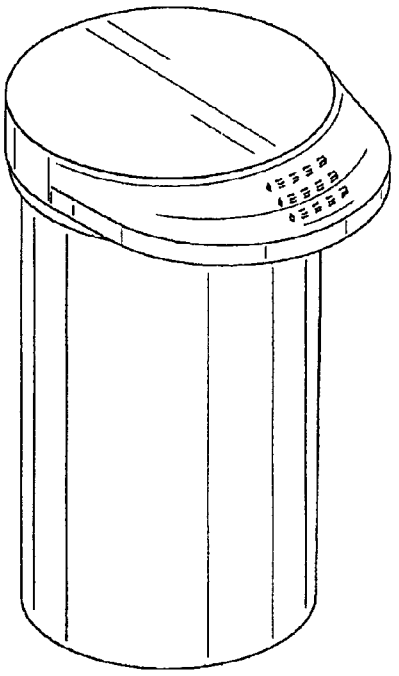

FIG. 1

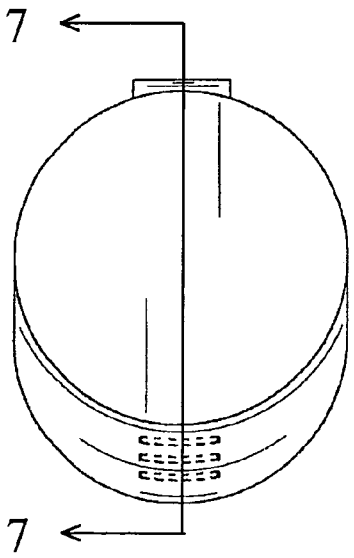

FIG. 2

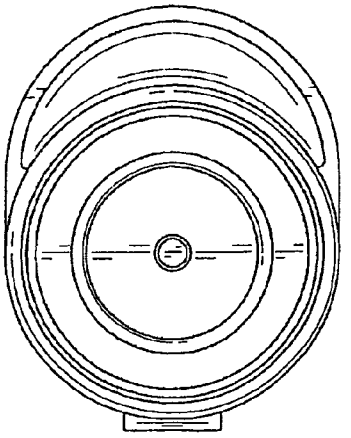

FIG. 3

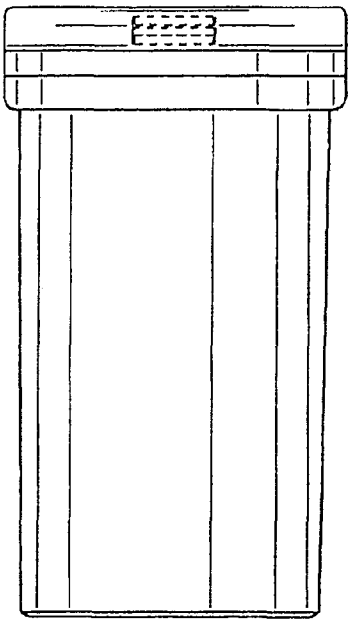

FIG. 4

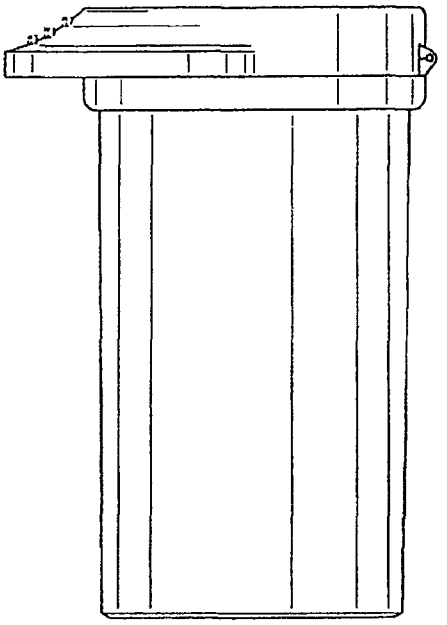

FIG. 5

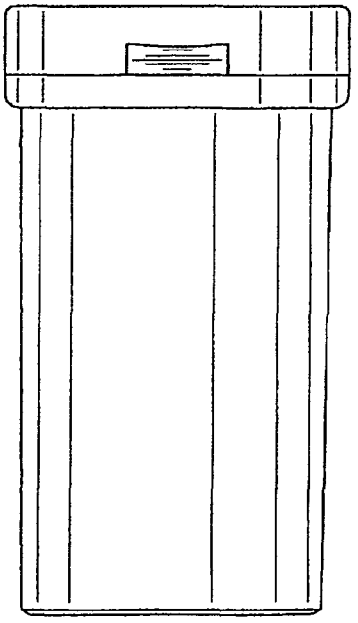

FIG. 6

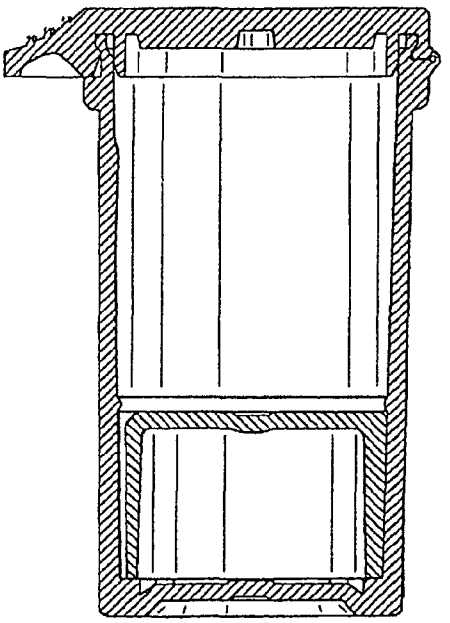

FIG. 7

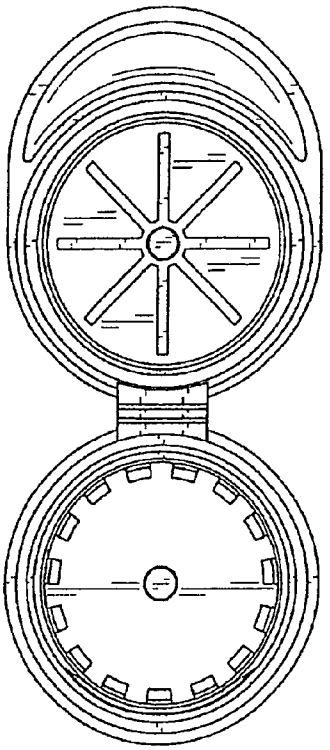

FIG. 8

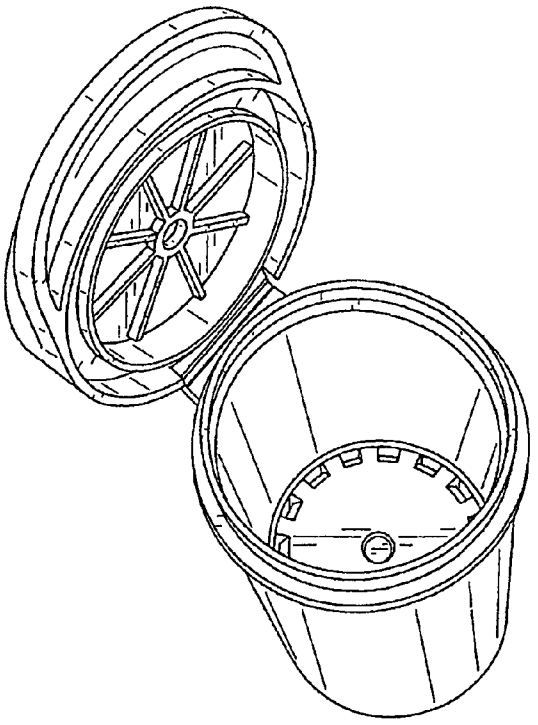

FIG. 9