Jan. 2, 1923. 1,440,459

A. E. GREFF.
KEY LOCK MECHANISM.
FILED JUNE 23, 1920.

2 SHEETS-SHEET 1

Fig. 1

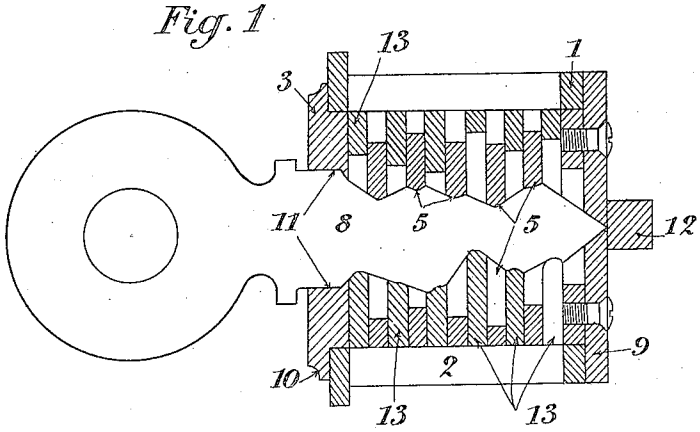

Fig. 2

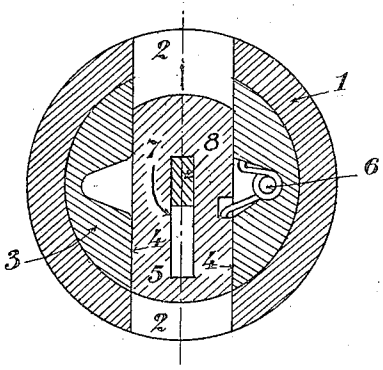

Fig. 3

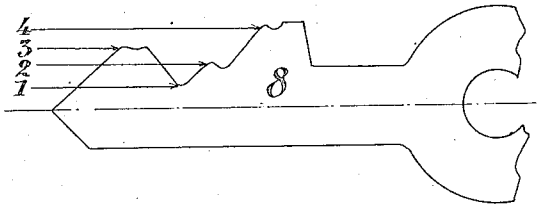

Fig. 6

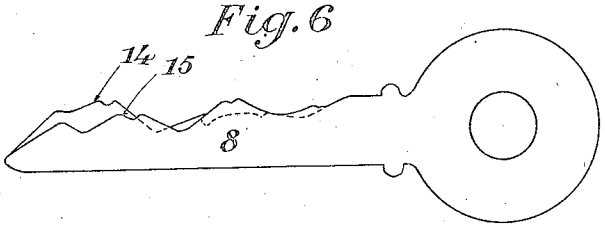

Fig. 5

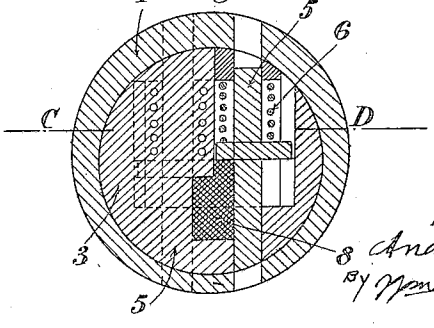

INVENTOR:
André Eugène Greff
BY Wm Wallace White
ATTY.

Jan. 2, 1923. 1,440,459

A. E. GREFF.
KEY LOCK MECHANISM.
FILED JUNE 23, 1920.

2 SHEETS-SHEET 2

Fig. 4

4444	4443	4442	4441	4434	4433	4432	4431	4424	4423	4422	4421	4414	4413	4412	4411								
4344	4343	4342	4341	4334	4333	4332	4331	4324	4323	4322	4321	4314	4313	4312	4311								
4244	4243	4242	4241	4234	4233	4232	4231	4224	4223	4222	4221	4214	4213	4212	4211								
4144	4143	4142	4141	4134	4133	4132	4131	4124	4123	4122	4121	4114	4113	4112	4111								
3444	3443	3442	3441	3434	3433	3432	3431	3424	3423	3422	3421	3414	3413	3412	3411								
3344	3343	3342	3341	3334	3333	3332	3331	3324	3323	3322	3321	3314	3313	3312	3311								
3244	3243	3242	3241	3234	3233	3232	3231	3224	3223	3222	3221	3214	3213	3212	3211								
3144	3143	3142	3141	3134	3133	3132	3131	3124	3123	3122	3121	3114	3113	3112	3111								
2444	2443	2442	2441	2434	2433	2432	2431	2424	2423	2422	2421	2414	2413	2412	2411								
2344	2343	2342	2341	2334	2333	2332	2331	2324	2323	2322	2321	2314	2313	2312	2311								
2244	2243	2242	2241	2234	2233	2232	2231	2224	2223	2222	2221	2214	2213	2212	2211								
2144	2143	2142	2141	2134	2133	2132	2131	2124	2123	2122	2121	2114	2113	2112	2111								
1444	1443	1442	1441	1434	1433	1432	1431	1424	1423	1422	1421	1414	1413	1412	1411								
1344	1343	1342	1341	1334	1333	1332	1331	1324	1323	1322	1321	1314	1313	1312	1311								
1244	1243	1242	1241	1234	1233	1232	1231	1224	1223	1222	1221	1214	1213	1212	1211								
1144	1143	1142	1141	1134	1133	1132	1131	1124	1123	1122	1121	1114	1113	1112	1111								

INVENTOR:
André Eugène Greff
BY Wm Wallace White
ATT'Y.

Patented Jan. 2, 1923. 1,440,459

UNITED STATES PATENT OFFICE.

ANDRÉ EUGÈNE GREFF, OF PARIS, FRANCE, ASSIGNOR TO JEAN ARMAND HAURAT, OF PARIS, FRANCE.

KEY-LOCK MECHANISM.

Application filed June 23, 1920. Serial No. 391,066.

(GRANTED UNDER THE PROVISIONS OF THE ACT OF MARCH 3, 1921, 41 STAT. L., 1313.)

To all whom it may concern:

Be it known that I, ANDRÉ EUGÈNE GREFF, citizen of the Republic of France, residing at 336 Rue des Pyrénées, Paris, in the Republic of France, have invented new and useful Improvements in Key-Lock Mechanisms (for which I have filed application in France Jan. 27, 1919, Patent No. 505,711), of which the following is a specification.

This invention has for its object to provide an improved combination key locking mechanism applicable to all key locking fastening such as all kinds of locks, padlocks, bolts, etc. (hereinafter included in the term "lock"). The improved key locking mechanism has the following advantages:—Each key is able to open only the lock for which it has been made; the locks may be grouped in series, a master-key being able to open some or all of the locks of any one series, and one or more master-keys being able to open a plurality of series of locks; no key can be so altered as to render it capable of opening any other lock, any alteration made in a key rendering it useless; no master-key can be so altered as to render it capable of opening any other locks than those for which it has been made; any alteration made in a master-key having the result of rendering it useless for a part of the locks for which it has been made, or even of rendering it completely useless.

In the accompanying drawings:—

Fig. 1 is an axial section of a lock with its key constructed in accordance with this invention.

Fig. 2 is a cross section of the preceding figure the tumblers being seen in projection.

Fig. 3 is a diagram necessary for explaining the principle upon which the invention is based.

Fig. 4 is a numerical table of a group of combinations which can be obtained; and

Figs. 5 and 6 show a modified form of construction of the lock.

The typical construction shown in Figs. 1 and 2 will enable the nature of the invention to be clearly understood.

The improved key locking mechanism comprises a fixed barrel 1 pierced with two rectangular apertures 2 situated diametrally opposite each other, within which there is adapted to revolve freely, but without play, a cylinder 3 pierced diametrally with a rectangular aperture 4 of similar cross section to the aperture 2, opposite which latter it is intended to be placed.

In this aperture 4, there are located parallelly and at right angles to the axis of cylinder 3, a plurality of tumblers 5 of small thickness but of the same width as the aperture 4 in which they are capable of moving and which serves as a slide-way for them all. Each of these tumblers is under the action of a spring 6 lodged in a cavity of the cylinder 3, and one end of which is engaged in a lateral notch of the tumbler, as is clearly shown in the drawing.

Each tumbler 5 is adapted to turn freely inside the barrel 1, with one end rubbing against the inner wall of the latter; the corresponding spring 6 has the function of engaging one end of the said tumbler 5 in one of the aperture 2 of the barrel in such a manner as to oppose the rotation of the cylinder 3.

Each tumbler is pierced with a rectangular aperture 7 of determined height which may be different for each tumbler or only for some of the tumblers. The width is the same for all these apertures because it serves for the passage of a common key 8 which is of rectangular cross section but is not uniform in height, as shown in Fig. 1.

At its inner end the cylinder 5 has attached to it an end plate 9; and at its outer end it has cast integral with it an end plate 10. These two end plates embrace the barrel 1 and prevent the cylinder 3 from shifting longitudinally along the said barrel. At one end, namely in the end plate 10 the cylinder 3 is pierced with an entrance 11 which serves to admit the key.

By the locking operation each tumbler 5 is caused by the action of its respective spring 6 to engage with one or the other end into one of the apertures 2 of the barrel, whereby the cylinder 3 is locked on the latter. But when the key 8 is inserted in the lock, it passes in succession through all the apertures 7 of the various tumblers, the shape of this key being such that all those tumblers 5 will move back completely into the cylinder 3 which can then be caused

by the key to turn in the barrel 1. The end plate 9 which turns with the cylinder 3, is provided with a central nib 12, or any other suitable device connected to the bolt in order to cause the latter to move and open the door.

As shown in Fig. 1, the tumblers 5 are considerably less in height than the diameter of the cylinder 3, so that if the biting or cam portions of the key should be higher than necessary to draw the tumbler ends within cylinder 3, it can nevertheless "unblock" the lock mechanism since the opposite ends of the tumblers will not be projected into the slot 2 of barrel 1; but it is quite unable to do this if its height is too small. This peculiarity is one of the essential and important characteristic features of the invention, because it is always easily possible to reduce the height of the key by means of a file or other means, whereas it is not an easy matter to increase its height and this renders the picking of the lock much more difficult if not impossible.

Since the tumblers 5 are generally all different from one another, or some only of them are different, it will be readily understood that the key must comprise a certain number of notches situated at greater or smaller distance from the axis, in order to cause the respective tumbler to move through the requisite amount for disengaging it from the aperture 2 of the barrel in which it is engaged when at rest.

In order to still further increase the safety of the improved locking mechanism, there may be placed between the tumblers 5, or otherwise arranged, tumblers 13 similar to those tumblers, but of a determined height such that if the key is too large, one end of the tumblers will engage in one of the apertures 2 and "block" the cylinder 3. These tumblers are identically similar in all the locking mechanisms of one and the same series.

In the key which has been chosen as an example and illustrated in Fig. 3, there are four notches situated on lines 1, 2, 3, 4 parallel to the axis of the key and spaced a determined distance apart. By varying the position of the notches on these lines, a certain number of combinations will be produced each of which may be indicated by a number that is formed by writing down in their order the numerals designating the depth of the notches. Thus the key illustrated in Fig. 3 may be indicated by the locking number 3124.

In the chosen example; it is possible to have a number of different combinations equal to $4^4=256$. By writing down all these combinations in a diminishing series to produce the table shown in Fig. 4, it will be perceived that, owing to the reason substantially set forth hereinabove, all the locking numbers that are horizontally underlined cannot open one another, and that all those struck through obliquely are opened by at least one of them. Consequently only the underlined locking mechanisms will be manufactured since they are independent of one another.

The combinations that are neither struck through nor underlined are capable of opening all or part of the underlined locking mechanisms. Therefore it is amongst these that the master-key will be chosen.

For instance: 4414 opens 4411—4312—4213—4114 (1) and 3414 3424 opens 3421—3322—3223—3124 (2) and 3414 and 2424. 2434 opens 2431—2332—2233—2134 (3) and 2424 and 1434. 1444 opens 1441—1342—1243—1144 (4) and 1434.

That is to say, there are four master-keys, each opening one of the series (1) (2) (3) (4); 3424 having a common locking 3414 with 4414, and one 2424 with 2434 which has likewise one 1434 in common with 1444.

Further, 4424 opens the lockings opened by 4414 and 3424 and has a locking 4121 peculiar to itself. 3434 opens the lockings opened by 3424 and 2434 and has a locking 3131 peculiar to itself. 2444 opens the lockings opened by 2434 and 1444 and has a locking 2141 peculiar to itself. 4434 opens the lockings opened by 4424 and 3434. 3444 opens the lockings opened by 3434 and 2444. 4444 opens all the lockings.

If an attempt should be made to file or reduce a key with a fraudulent intent, the said key would become altered in such a manner as to correspond to a lock that has not been made, and consequently the said key would become useless. For instance: 2431 altered to 1431 or 2331 or 1331, etc., is incapable of opening any existing lock.

Similarly a master-key if altered in the same way, will be capable of opening fewer and fewer locks until a point is reached where it becomes altogether useless. Example 3424 altered to 3423 will open neither 3124 nor 2424.

This grouping principle is of course applicable irrespectively of the number of the notches in the key and the variety of these notches.

It is obvious that modifications may be made in the apparatus described with reference to Figs. 1 and 2.

In the construction illustrated in Figs. 5 and 6 the key 8 comprises two parallel series 14 and 15 of nicks acting upon necks of two rows of tumblers 5 lodged and guided in the cylinder 3 and acted upon by springs 6. The key 8 has the function of bringing the ends of these tumblers flush with the side of the cylinder 3 in order to allow the latter to turn inside the barrel 1 as in the preceding cases.

The juxtaposition of two rows of notches

in the key increases considerably the number of combinations, and renders fraudulent opening still more difficult.

Having now described my invention, what I claim as new and desire to secure by Letters Patent is:

1. A key locking mechanism comprising a fixed barrel, a rotary cylinder in said barrel, operatively connected to the mechanism of the lock, a key provided with steps and adapted to engage into the rotary cylinder and rotate therewith and spring controlled locking members adapted to slide radially in the rotary member and having an inner edge adapted to cooperate with a step on the key, said locking members being adapted to engage with the fixed barrel and having a length smaller than the diameter of the rotary cylinder.

2. A key locking mechanism comprising a fixed barrel, a rotary cyinder in said barrel, operatively connected to the mechanism of the lock a key provided with two series of juxtaposed steps and adapted to engage into the rotary cylinder and rotate therewith, spring controlled, locking members adapted to slide radially in the rotary member and having an inner edge adapted to cooperate with a step on the key, said locking members being adapted to engage with the fixed barrel and having a length smaller than the diameter of the rotary cylinder (Fig. 6).

3. A key locking mechanism comprising a fixed barrel, a rotary cylinder in said barrel, operatively connected to the mechanism of the lock, a key provided with steps and adapted to engage into the rotary cylinder and rotate therewith, spring controlled locking members adapted to slide radially in the rotary member and having an inner edge adapted to cooperate with a step on the key, said locking members being adapted to engage with the fixed barrel and having a length smaller than the diameter of the rotary cylinder and additional locking members identical in all of the locks of one and the same series slidably mounted in the rotary cylinder and adapted to engage with steps on the key for the purpose of locking the rotary cylinder to the fixed barrel if the corresponding steps of the key are too high.

In testimony whereof I have signed my name to this specification.

ANDRÉ EUGÈNE GREFF.