PCT WORLD INTELLECTUAL PROPERTY ORGANIZATION
International Bureau

INTERNATIONAL APPLICATION PUBLISHED UNDER THE PATENT COOPERATION TREATY (PCT)

(51) International Patent Classification 6 : A47J 37/04	A1	(11) International Publication Number: WO 99/51135
		(43) International Publication Date: 14 October 1999 (14.10.99)

(21) International Application Number: PCT/TR98/00007

(22) International Filing Date: 3 April 1998 (03.04.98)

(71)(72) Applicant and Inventor: BABACAN, Ayhan [TR/TR]; Meşeli Sok. 38/1, 4. Levent, 80620 Istanbul (TR).

(74) Agent: DERIS, M., N., Aydin; Inebolu Sok. No:3, Derya Han Kat:5, Kabatas–Setüstü, 80040 Istanbul (TR).

(81) Designated States: AL, AM, AT, AU, AZ, BA, BG, BR, BY, CA, CH, CN, CZ, DE, DK, EE, ES, FI, GB, GE, HU, IL, JP, KG, KP, KR, KZ, LT, LU, LV, MD, MK, MN, MX, NO, NZ, PL, PT, RO, RU, SE, SG, SI, SK, TJ, TM, TR, UA, US, UZ, VN, YU, Eurasian patent (AM, AZ, BY, KG, KZ, MD, RU, TJ, TM), European patent (AT, BE, CH, CY, DE, DK, ES, FI, FR, GB, GR, IE, IT, LU, MC, NL, PT, SE).

Published
With international search report.

(54) Title: INTEGRATED COOKING AND CUTTING INSTRUMENT FOR FAST FOOD DONER KEBAB AND METHOD THEREFOR

(57) Abstract

Subject of the present invention is a method for cooking, cutting and preparing the doner meat automatically and without any human intervention in the same amount and form for service and an integrated instrument for cooking and cutting doner. This invention relates to a method for cooking the front sides of the meat boxes which are filled and frozen beforehand, by rotating said meat boxes around a centre arranged circularity or with multi-sides having 4, 5 or 7 cookers (radian or LPG), cutting the cooked meat part and sending it for cooking again by rotating around itself and carrying all of these operations at a predetermined amount and speed without human intervention controlled from a central command and tuning table and an integrated doner cooking and cutting instrument for performing said method.

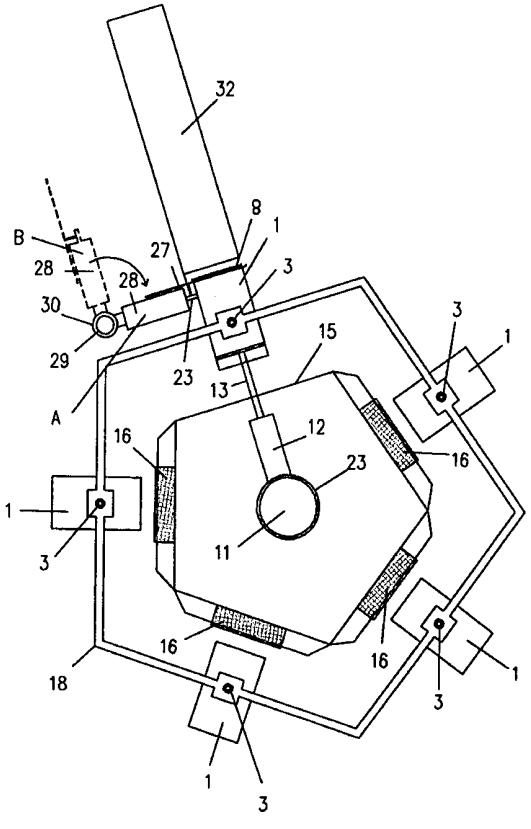

FOR THE PURPOSES OF INFORMATION ONLY

Codes used to identify States party to the PCT on the front pages of pamphlets publishing international applications under the PCT.

AL	Albania	**ES**	Spain	**LS**	Lesotho	**SI**	Slovenia
AM	Armenia	**FI**	Finland	**LT**	Lithuania	**SK**	Slovakia
AT	Austria	**FR**	France	**LU**	Luxembourg	**SN**	Senegal
AU	Australia	**GA**	Gabon	**LV**	Latvia	**SZ**	Swaziland
AZ	Azerbaijan	**GB**	United Kingdom	**MC**	Monaco	**TD**	Chad
BA	Bosnia and Herzegovina	**GE**	Georgia	**MD**	Republic of Moldova	**TG**	Togo
BB	Barbados	**GH**	Ghana	**MG**	Madagascar	**TJ**	Tajikistan
BE	Belgium	**GN**	Guinea	**MK**	The former Yugoslav Republic of Macedonia	**TM**	Turkmenistan
BF	Burkina Faso	**GR**	Greece			**TR**	Turkey
BG	Bulgaria	**HU**	Hungary	**ML**	Mali	**TT**	Trinidad and Tobago
BJ	Benin	**IE**	Ireland	**MN**	Mongolia	**UA**	Ukraine
BR	Brazil	**IL**	Israel	**MR**	Mauritania	**UG**	Uganda
BY	Belarus	**IS**	Iceland	**MW**	Malawi	**US**	United States of America
CA	Canada	**IT**	Italy	**MX**	Mexico	**UZ**	Uzbekistan
CF	Central African Republic	**JP**	Japan	**NE**	Niger	**VN**	Viet Nam
CG	Congo	**KE**	Kenya	**NL**	Netherlands	**YU**	Yugoslavia
CH	Switzerland	**KG**	Kyrgyzstan	**NO**	Norway	**ZW**	Zimbabwe
CI	Côte d'Ivoire	**KP**	Democratic People's Republic of Korea	**NZ**	New Zealand		
CM	Cameroon			**PL**	Poland		
CN	China	**KR**	Republic of Korea	**PT**	Portugal		
CU	Cuba	**KZ**	Kazakstan	**RO**	Romania		
CZ	Czech Republic	**LC**	Saint Lucia	**RU**	Russian Federation		
DE	Germany	**LI**	Liechtenstein	**SD**	Sudan		
DK	Denmark	**LK**	Sri Lanka	**SE**	Sweden		
EE	Estonia	**LR**	Liberia	**SG**	Singapore		

INTEGRATED COOKING AND CUTTING INSTRUMENT FOR FAST FOOD DONER KEBAB AND METHOD THEREFOR

Description:

The present invention relates to a method for obtaining cooked doner meat within the speed, the hygienic conditions, the form and the standards required by a fast food system and an integrated doner broiling and cutting instrument for achieving this method.

Technical Field of the Invention:

The field of the invention and the technique for making Turkish Doner Kebab is known. In conventional methods a grill bar, usually vertical, dressed with doner material of meat and minced meat cooked, is rotated on its vertical axis in front of a cooker and the broiled parts of the meat is cut with a knife in a vertically downward fashion.

According to said method, rotation of the meat cylinders arranged around the grill bar in the said order were tried in different ways, namely, vertically and horizontally, different types of cookers were tried, electrical knives were used for cutting but no alternative solution or modification could be provided for the traditional way of rotating the meat on the grill axis in front of a cooker and cutting the broiled parts by a human operated knife. The most improved variation of the traditional method comprises the preparation and freezing of the blocks of meat at a central place and transmitting the frozen meat blocks to the cooking station, and using electrical knives in cutting the broiled meat. Presently, there is no method or instrument, known or

used, both for broiling and cutting the doner meat in the same amount and form, ready to serve, without human intervention.

Publications representing the State-of-the-Art are the British Patent No. 2,218,327 - MICHAEL ZANNETOS, British Patent No. 2,271,274 - MUSTAFA KAYA TÜREDİ, European Patent Application No. 85300967,8 - OZORAN LIMITED, and as it is known from all of these documents, the doner meat to be cooked is aligned in a row around a single grill bar and a single bar of meat is rotated in front of a single cooker and the cooked meat is cut off by a man operated knife or various other cutting tools, thus made ready to serve. Neither of the above publications comprises the act of putting ready-to-cook meat into boxes and depending on the preferences or needs, placing 5, 6 or 8 meat boxes onto a rotating carrier chassis and rotating all of them together around 4, 5 or 7 separate cookers, thus progressively broiling the meats inside the boxes without human intervention and cutting them into ready-to-service doner meat of the same standard cooking degree and amount and within the pretermined time.

Therefore, as a result of the presently known technique, standard form or standard weight has never been achieved in obtaining cooked and ready-to-serve doner meat. The process of rotating and cutting could not be automated, and they were carried on by man or a man operated knife. The speed of obtaining cooked meat has been limited to the broiling speed of the meat in a single block, and standardisation, speed and practicality of a fast food system could not be obtained. The hygienic conditions, left only to the operator, were far from being consistently clean.

On the other hand, the present invention provides the automation and standardisation required in a fast-food system as described herein below; all of the parts constituting the integrated broiling and cutting device of the invention are controlled by motors directed from a central control panel and they can be operated in co-operation and as a whole in an automatic way, and the integrated broiling and cutting device could be adjusted to obtain the desired amount of meat at a desired broiling rate. As a result, all of the operations, either in small businesses or big ones could be carried out without direct human intervention and the broiled and cut meat is obtained in a standard form and weight.

Integrated doner broiling and cutting device of the invention comprises separate units each carrying out a different operation: 1) Meat boxes, 2) Broiling unit, 3) Rotating unit, 4) Cutting unit and 5) Central control and adjustment panel.

Parts making up the integrated doner broiling and cutting device of the invention and their connection are shown in the enclosed drawings, in which;

FIGURE 1 - is a perspective view of the meat box (1) from the front quarter.

FIGURE 2 - is a perspective view of the meat box (1) from the rear quarter.

FIGURE 3 - is a perspective view of the meat box (1) from the front quarter with the interior wall (7) placed in it.

FIGURE 4 - is a perspective view of the interior wall (7) placed inside the meat box (1) with the meat inside it, from the front quarter.

FIGURE 5 - shows the movable pushing plate (9) whose side surface is similar to the edge of the interior wall (7) of figure 4 and which constitutes the rear surface of the interior wall (7), and the two resilient arms (10) in which they are rearwards unopened.

FIGURE 6 - shows the two resilient arms (10) in a rearwards open state behind the movable pushing plate (9) of figure 4, when it is pushed forward, whose side surface is similar to the edge of the interior wall (7) of figure 4 and which constitutes the rear surface of the interior wall (7).

FIGURE 7 - is another view of the interior wall (7) where meat is placed, showing that the side edges of the interior wall (7) could be in any other desired form.

FIGURE 8 - shows the movable pushing plate (9) whose side surface is similar to the edge of the interior wall (7) of figure 7 , and which constitutes the rear surface of the interior wall (7), together with the two resilient arms (10) in a rearwards unopened state.

FIGURE 9 - shows the two resilient arms (10) opened rearward behind the movable pushing plate (9), when it is pushed forward, whose side surface is similar to the edge of the interior wall (7) of figure 4 and which constitutes the rear surface of the interior wall (7).

FIGURE 10 - shows the central fixed bar (11) carrying the fixed cookers on it, and the 2 pushing pistons (12), the piston arms (13) and the rotating arm (14).

FIGURE 11 - shows the central fixed bar (11) with cookers (16) arranged in a pentagon fashion on it and the projecting two pushing piston arms (13) and the rotating arm (14).

FIGURE 12 - shows the carrier chassis forming the rotating group where the meat boxes (1) are seated which that can be configured as a pentagon, hexagon, or an octagon.

FIGURE 13 - shows five meat boxes (1) placed on top of the pentagonal lower frame (17) of the rotating group's carrier chassis, and the meat box at the front has its open front face turned outwardly in order to slice the cooked meat, and is ready to be cut.

FIGURE 14 - shows 5 meat boxes (1) placed on top of the pentagonal lower frame (17) and upper frame of the rotating group's carrier chassis, and the meat box at the front has its open front face turned outwardly in order to slice the cooked meat, and is ready to be cut.

FIGURE 15 - shows as a side cross-section, two piston arms of the mobile pushing plate's (9) two pistons, pushing the cooked meat section that is on the open side of the meat box (1), so that it projects 3 mm from the meat box (1) and is made ready to be cut, and the resilient arms (10) behind the mobile pushing plate (9) which are pushed forward during the process and are opened rearwards and jump one tooth, entering the toothed slots (6) at the

rear wall (4) of the meat box (1), so preventing the mobile pushing plate (9) from sliding back.

FIGURE 16 - shows a top view of a configuration layout of an instrument pentagonally configured with 4 cooker (16) stations and a cutting station without a cooker (15).

FIGURE 17 - is a top view of a configuration layout of an instrument hexagonally configured with 5 cooker (16) stations and a cutting station without a cooker (15).

FIGURE 18 - is a top view of a configuration layout of an instrument hectagonally configured with 7 cooker (16) stations and a cutting station without a cooker (15).

FIGURE 19 - shows the cutting unit of the cutting group comprising the disc knife (27) and the knife motor (28).

FIGURE 20 - shows the cutting unit of the cutting group comprising disc knife (27) and the knife motor (28) and the fixed horizontal plane (32) placed in front of it, the plane connected to the fixed bar (29) that carries them.

FIGURE 21 - shows the cutting unit of the cutting group comprising disc knife (27) and the knife motor (28) and the fixed horizontal plane (32) placed in front of said unit, wherin said unit and fixed horizontal plane are connected to the fixed bar (29) carrying them, and the cooked meat slice at the open front side (8) of the meat box (1) is cut and the cooked meat slice (31) lies on the horizontal plane (32).

FIGURE 22 - shows an instrument of the invention as a whole, pentagonally configured comprising 4 cooker stations

(16) and a cutting station without cooker (15) including the cutting group of the station without cooker (15).

FIGURE 23 - shows the Central monitoring and Tuning Table, which facilitates the tuning of Time/Speed/Amount and the process according to desire and needs, and allows operation of the instrument with its various components as an integrated whole.

1- Meat boxes: The boxes are filled with meat in butchery, are let frozen and are sent to businesses having cooker groups inside refrigerated containers.

Meat boxes (1) are preferably 10 cm x 60 cm with 15 cm depth, made of stainless steel with an open front side (8), there are pins (2), (3) in the middle of the lower and upper walls of the meat boxes (1) in order to seat them, as shown in Figures 12, 13 and 14, on the seats (19) in the lower (17) and upper frames (18) which could be pentagonal, hexagonal or octagonal. There are two holes (5), a lower and an upper one, at the closed rear side (4) of the meat boxes (1). The meat boxes (1) also comprise in its inner part a thin interior wall (7) of stainless steel. This interior wall (7) is inserted and fixed into the meat box (1) as seen in Figure 3, so that the front side of the meat (8) is open. As seen in Figures 4 and 7, this interior wall (7) may have different edge forms so that it gives a certain form to the cooked meat besides preventing any contraction that may take place in the meat block during cooking. At the back of this interior wall (7) there is a mobile pushing plate (9) constituting the rear side of the wall and whose edges have the same form as the edge of the said interior wall. As may be seen in Figures 5, 6 and 8, 9, side edges of the mobile pushing plate (9)

forming the rear side of the interior wall (7), have to have the same form as the side edges of the interior wall (7) which can be in any desired form. Figures 4,5 and 6, and Figures 7, 8 and 9 are organised to emphasise and show this point. Said mobile pushing plate (9) can go forward and rearward at a right angle inside the interior wall (7) having the same edge form, and it is being pushed from behind each time to go forward and push the meat block (8A) inside the interior wall 3 mm forwards so that it is ready to be cut. The mobile pushing plate (9) is pushed by the piston pushing arms (13) of the two pistons (12) located at the side (15) of the instrument where there is no cooker and connected to the fixed bar (11) at the centre of the cooker group, towards the open front side (8) of the meat box (1) so that the cooked part of the meat is pushed 3 mm out from the meat box (1) for cutting. After this cooked meat of 3 mm is cut, the meat box is sent for cooking again.

There are two resilient arms (10) behind the mobile pushing plate (9) ensuring that it stays there after each time it is pushed. These resilient arms are opened one step back each time the mobile pushing plate (9) is pushed forward 3 mm, and they enter the gear openings (6) at the rear wall of the box, thus, they stand at a right angle inside the mobile pushing plate (9) behind the meat box (8A) without coming back and are ready for the next 3 mm push.

2- Cooker group: The cooker group comprises 4, 5, 7 units of (LPG or radian) cookers (16) that are pentagonally, hexagonally or octagonally arranged and vertically standing on the fixed bar (11) at the centre of the system, as seen in figures 16, 17, 18 and 22. A pentagonal instrument (Figure 16) has been arranged to have 4 cooker stations (16)

and a cutting station without cooker (15), a hexagonal instrument (Figure 17) to have 5 cooker stations (16) and a cutting station without cooker (15), and a octagonal instrument (Figure 18) to have 7 cookers (16) and a cutting station without cooker (15). In each cutting station without cooker (15), there are two holes (5A) through which piston pushing arms (13) of the pushing pistons (12) connected to the fixed main bar (11) do project. These piston pushing arms (13) also enter the holes (5) at the rear side (4) of the meat box (1). The height of the cookers (16) is the same as the meat box (1). Cooking heat provided by each cooker (16) (radian or LPG) could be tuned progressively according to the desired cooking degree or temperature.

3- Rotating group: The rotating group comprises a rotating exterior bar (22) on which lower (17) and upper (18) frames of pentagonal, hexagonal or octagonal shape is mounted with pin seats (19) on them to receive the lower (2) and upper (3) pins of the meat boxes (1). The rotating exterior bar (22) is seated on the fixed bar (11) and is rotated by a group of gears (25) (26) connected to a single motor (24). The number and speed of the rotations is adjusted from the command and tuning table (Figure 23). At the pentagonal arrangement with 4 cooker stations (16) and a cutting station without a cooker (15), the rotating angle is 72°. At five rotations a full circle of 360° is completed. At a hexagonal arrangement with 5 cooker stations (16) and a cutting station without a cooker (15), the rotating angle is 60° and 6 rotations complete a 360° circle. The frames where the meat boxes (1) are seated are the lower (17) and upper (18) frames. On the lower (17) and upper (18) frames there are seats (19) to receive the meat boxes (1), and the pins (2), (3) on the meat boxes (1) engage in these seats (19) so that the

meat box (1) is placed on the lower (17) and upper (18) frames. The lower frame (17) is connected to the rotating exterior bar (22) from its corners with linking arms (20). The upper frame (18), on the other hand, is connected to a rotating ring (23) on the fixed central bar (11) from its corners with linking arms (20). Thus, by turning the rotating exterior bar (22) around the central fixed bar (11), lower and upper frames (17) (18), and in return, the meat boxes (1) they carry, go round the cookers as can be seen in Figures 13 and 14. Depenting to the number of cookers (16) the instrument of the invention has, the rotating degree of the lower and upper frames (17), (18) is adjusted from the command and tuning table (Figure 23) via a motor (24). In this rotational movement, each cooker (16) constitutes a station and the meat box (1) is kept at each station (16) for a programmed amount of time and the cooking process is progressively completed.

4- Cutting Group: After going around the stations step by step, the meat at the open front side of the block of meat (8A) inside the meat box (1) is cooked and ready to be cut when it comes to the cutting station without a cooker (15), and here, the slot of the rotating arm (14) connected to the main fixed bar (11) at this station (15), engages the rectangular end of the upper pin (3) of the meat box (1) and the box is rotated around its axis 180° as seen in Figures 13, 14 and 22, and the front side (8) containing the cooked meat is ready for cutting. After the 180° rotation is completed, pistons (12) connected to the fixed arm (11) are moved and the piston pushing arm (13) goes through the holes (5) behind the meat box (1) until the ends of the piston pushing arms (13) touch the mobile pushing plate (9) and stops the moment it touches there. After a short stopping period, the realigned piston

pushing arm (13) moves forward again for just 3 mm, pushes the mobile pushing plate (9) only 3 mm forward/outwards before stopping and then returns. As a result of this process, the mobile pushing plate (9) at the back of the meat block (8A) inside the interior wall (7) which is located inside the meat box (1) is pushed forward 3 mm, the meat block (8A) is also pushed forward 3 mm and the cooked meat block at the open front side (8) of the meat box (1) is projected 3 mm and is ready to be cut. As seen in Figure 15, the resilient arms (10) behind the mobile pushing plate (9) which is pushed forward 3 mm, are opened rearwards, and jump one tooth to enter the gear slots (6), thus, prevent the mobile pushing plate (9) from slipping back.

When the cooked meat is pushed 3 mm outside the box, the cutting process starts. As may be seen in Figures 19, 20 and 21, the automatic knife (27) of the cutting group is connected to a fixed bar (29) from behind with a ring (30). The automatic knife (27) moves on this bar (29) up and down and in a circular motion around the axis of the bar, again controlled by the central command and tuning table. In front of the cutting knife (27), and at the front part of the arm (33) connected to the ring (30), there is a horizontal plane (32) where the cut cooked meat slice (31) will lie. In cutting position (A) (Figure 22), the disc knife (27) of the cutting group starts to rotate, then the knife motor (28) starts to descend in the edge seats together with the ring (30) which connects it to the fixed bar (29). The cut slice of cooked meat (31) lies on the fixed horizontal plane (32) connected to the arm (33) in front of the cutting knife (27). When the knife motor (28) reaches its lowest point the cutting process is complete and the cooked slice of meat (31) is taken away from the horizontal plane (32). When

the cutting process is finished in cutting position (A) (Figure 22), the cutting knife (27) moves up to its first position and stops, then turns 90° to its standstill (B) position (Figure 22). At this stage where the cutting process is completed, the rotating arm (14) connected to the central fixed bar (11) moves and turns the empty meat box (1) whose cooked meat is taken away, 180° and brings it to cooking position in front of the next cooker (16) and is released from the upper pin (3) of the meat box (1). As seen in Figures 13, 14 and 22, when the rotating group is turned one step, the empty meat box (1) comes to the next cooker (16) station in the turning direction while the following meat box arrives at the cutting station without a cooker (15). The above process is repeated.

When the last slice is cooked, the empty box will arrive at the first station after the cutting station in the turning direction. At this stage, the empty meat box (1) will be taken away and a new full meat box (1) from the frigorific box is placed instead.

5-Central Command and (Time/Speed/Amount/Process) Tuning Table:

It is preferred that the units of the integrated instrument of the invention operate together automatically. However, these are arranged in a way that would facilitate a manual tuning from the Central Command and tuning table according to the need or desire. Although all processes are integrated with each other, each of the rotating process, rotation of the meat box (1) around itself for the cutting process, the cutting process itself and the movements of the knife (27), rotating the meat box (1) again for cooking, adjusting the cooking temperature of each of the cookers (16) separately, is automatically controlled as for operation and time. Thus, it is possible to adjust time

and speed for cooking, and as a result the amount. These process stages are directed by the Central Command and Tuning Table (Figure 23).

a) Only the rotating group is operated (Figure 23). As seen in Figure 22, an instrument of pentagonal arrangement having 4 cookers (16) and a cutting station without a cooker, is controlled from the central command and tuning table (Figure 23); each time the button is pressed, the gear group (25) (26) rotating the rotating group makes a "turn". This is a 72° rotation. A rotation of 5 slices makes a full circle. The temperature of the cookers during these rotations is controlled by the cooker tuning (Figure 23) at the command table. If desired, the boxes may be rotated without any cutting, any cooking or cooking at a desired rate, at the desired intervals and for the desired periods.

b) The meat box (1) is kept at the cutting station, without rotating for cutting, for a desired period of time.

c) Although it is rotated for cutting, the meat box (1) is rotated back without cutting, then turned to other stations.

d) All of these operations are carried out from the command and tuning panel, according to needs.

List of References:

1 : meat box

2 : lower pin

3 : upper pin

4 : back side of the meat box

5 : hole at the back side of the meat box

5A: hole at the station without cooker

6 : gear slots

7 : interior wall

8 : open front side of the meat box and of the meat inside it

8A: meat block inside the interior wall

9 : mobile pushing plate

10 : resilient arms

11 : central fixed bar

12 : piston

13 : piston pushing arms

14 : rotating arms

15 : station without cooker

16 : cooker

17 : lower frame

18 : upper frame

19 : seat

20 : linking arms

21 : thin bar

22 : rotating exterior bar

23 : rotating ring

24 : motor

25 : gear group

26 : gear group

27 : disc knife

28 : motor of knife

29 : fixed bar

30 : ring

31 : cooked meat slice

32 : fixed horizontal plane

33 : arm

CLAIMS

1. Integrated doner cooking and cutting instrument for obtaining cooked doner meat of standard form and cooking degree, ready to serve, characterised in that it comprises 5 separate units having separate functions working in an integrated way with each other, comprising:

1) Meat box (1) (Figures 1, 2, 3 ,4, 7 and 15),
2) Cooking group (16) (Figures 10, 11)
3) Rotating group (17) (18) (22) (23) (24) (25) (26) (Figures 12, 13 and 14)
4) Cutting group (27) (28) (30) (32) (Figures 19, 20, 21)
5) Central command and (time/speed/amount/process) tuning table (Figure 23)

2. An integrated doner cooking and cutting instrument according to claim 1 characterised by a meat box (1) comprising a meat box (1) with an interior wall (7) located in it, a mobile pushing plate (9) forming the rear side of this interior wall (7), and pins (2) (3) located on the lower and upper exterior surfaces of the meat box (1) facilitating the positioning of the carrier chassis on the seats (19) on the lower (17) and upper (18) frames of the rotating group (Figure 12).

3. An integrated doner cooking and cutting instrument according to claims 1 and 2 characterised by placing the meat block (8A) to be cooked within the interior wall (7), and locating the interior wall (7) in the meat box (1) so that the front side (8) of the meat is open (Figure 3).

4. An integrated doner cooking and cutting instrument according to claims 1 to 3 characterised by a interior wall (7) holding the meat

block (8A) to be cooked having any desired edge shape so that the meat block (8A) inside the interior wall (7) could be obtained in any edge shape ready to serve.

5. An integrated doner cooking and cutting instrument according to claims 1 to 4 characterised by an interior wall (7) having a rear side comprising a flat mobile pushing plate (9).

6. An integrated doner cooking and cutting instrument according to claims 1 to 5 characterised by a mobile pushing plate (9) with edges having the same form as the edges of the interior wall (7) so that the pushing plate (9) can move forward and backward inside the interior wall (7) at a right angle.

7. An integrated doner cooking and cutting instrument according to claims 1 to 6 characterised by a mobile pushing plate (9) which each time pushes the meat block (8A) to be cooked 3 mm outside of the open front side of the meat box (1) placed inside the interior wall (7) so that the front side of the meat which is cooked and ready to serve is projecting outside the meat box (1) (Figure 15) and ready for cutting.

8. An integrated doner cooking and cutting instrument according to claims 1 to 7 characterised by a mobile pushing plate (9) having resilient arms (10) behind, which after the meat block inside the interior wall (7) is pushed 3 mm outside the meat box (1), open rearwards to enter the gear slots (6) arranged at the interior side of the rear side (4) of the meat box (1), thus, preventing the mobile pushing plate (9) from slipping back and ensuring that the mobile pushing plate (9) remains in its place.

9. An integrated doner cooking and cutting instrument according to claims 1 to 8 wherein the meat box (1), interior wall (7) and the mobile pushing plate (9) is manufactured from stainless steel.

10. An integrated doner cooking and cutting instrument according to claims 1 to 9 characterised by a meat box (1) preferably having dimensions of 10 cm x 60 cm with a depth of 15 cm.

11. An integrated doner cooking and cutting instrument according to claims 1 to 10 characterised by a meat box (1) having a lower pin (2) and an upper pin (3) in the middle of the each lower and upper exterior surfaces thereof, to facilitate seating them on the rotating group (Figure 12) and its lower (17) and upper (18) frames, and also having 2 holes (5) at the lower and upper parts of the back side wall.

12. An integrated doner cooking and cutting instrument according to claims 1 to 11 characterised by cooking group (Figure 11) comprising 4, 5 or 7 radian or LPG cookers (16) standing vertically on a pentagonal, hexagonal or octagonal arrangement as desired/needed on the central fixed bar (11).

13. An integrated doner cooking and cutting instrument according to claims 1 to 12 characterised by cookers (16) having the same height as the meat box (1).

14. An integrated doner cooking and cutting instrument according to claims 1 to 13 characterised by a Central Command and Tuning Table (Figure 23) able to control the cooking temperature of each cooker (16) in terms of the desired cooking temperature.

15. An integrated doner cooking and cutting instrument according to claims 1 to 14 characterised by providing a forward movement to the mobile pushing plate (9) inside the interior wall (7) towards the open front side (8) with the forward movement of 2 pistons (12) connected to the fixed bar (11) at the centre of the rotating group, and their pushing arms (13).

16. An integrated doner cooking and cutting instrument according to claims 1 to 15 characterised by a rotating group (Figure 12) comprising a carrier chassis (Figures 12, 13 and 14) consisting of two frames, one lower (17) and one upper (18) preferably, arranged in a pentagonal, hexagonal or octagonal way according to desire or need, connected to each other from the corners by thin bars (21) which in turn are connected to a rotating exterior bar (22) encasing the central fixed bar (11) and to a ring (23) again encasing the fixed bar, with horizontal arms (20).

17. An integrated doner cooking and cutting instrument according to claims 1 to 15 characterised by a rotating group having a carrier chassis (Figures 12, 13, 14) with seats (19) on the lower (17) and upper (18) frames thereof to seat the meat blocks.

18. An integrated doner cooking and cutting instrument according to claims 1 to 17 characterised by placing the meat box (1) on the carrier chassis (Figures 13, 14) and the rotating group by engagement of the lower (2) and upper (3) pins of the meat box (1) in the seats (19) on the lower (17) and upper (18) frames.

19. An integrated doner cooking and cutting instrument according to claims 1 to 18 characterised by turning the meat box (1) with the cooked meat at the open front side (8) at the cutting station without a cooker (15) 180° around its own axis for cutting the cooked front side (8) of the meat and facilitating this turning by the action of the rotating arm (14) connected to the central fixed bar (11) of the rotating group (Figures 10, 11).

20. An integrated doner cooking and cutting instrument according to claims 1 to 19 wherein the turning of the meat box (1) around its axis with 180° through the connection of the rotating arm

(14) which is placed on the fixed bar (11), to the rectangularly pointed upper pin of the meat box (1) is controlled from the Central Command and Tuning panel (Figure 23).

21. An integrated doner cooking and cutting instrument according to claims 1 to 20 wherein a single motor (24) with a gear group (25) (26) provides the rotation of the exterior bar (22) around its axis of the rotating exterior bar (22) connected to the lower (17) and upper (18) frames on which the meat boxes (1) are placed (Figures 12, 13, 14), which is encasing the fixed bar (11).

22. An integrated doner cooking and cutting instrument according to claims 1 to 21 wherein the turning of each metal box (1)on the rotating group, which group carries on the lower (17) and upper (18) frames the meat boxes(1), depending on the number of cooking stations on the integrated instrument (Figure 16, 17, 18), is controlled in terms of time, speed and degree of turning, so that each metal box (1) faces each cooker station in a step-by-step manner by means of a single motor (24) and a gear group (25) (26) directed by the central command and tuning table.

23. An integrated doner cooking and cutting instrument according to claims 1 to 22 wherein the meat block (8A) inside the meat box (1) is pushed 3 mm forward towards the open front side (8), when it is cooked and ready to be cut, thus, preparing the cooked front side of the meat (8) for cutting.

24. An integrated doner cooking and cutting instrument according to claims 1 to 23 characterised by a cutting group comprising a cutter unit having a cutting motor (28) and a rotating cutter/slicing knife (27) (Figure 19) and a fixed horizontal plane (32) arranged in front of it and a ring (30) facilitating the connection to the

fixed bar (29) carrying them and the motion of the cutting group around its axis (Figure 22) and the up and down motion on the fixed bar (29) (Figures 20, 21).

25. An integrated doner cooking and cutting instrument according to claims 1 to 24 characterised by having a horizontal plane (32) in front of the arm (33) which carries the mobile cutting unit (Figure 19) and is connected to the ring (33), for the cooked meat slices to lie as they are cut, and by the length of this horizontal plane (32) being the same as the length of meat box (1).

26. An integrated doner cooking and cutting instrument according to claims 1 to 25 characterised in that during the cutting position (A) the disc knife (27) connected to the ring on the cutting unit moves downwards along the fixed bar (29) through the cutting process and then moves upwards to its original situation and this vertical movement in the cutting position (A) is controlled via the Central Command and Tuning Table (Figure 23).

27. An integrated doner cooking and cutting instrument according to claims 1 to 26 characterised by bringing the cutting group to standstill (B) (Figure 22) position by turning 90° around the axis of the fixed bar (29) after it returns to its first position at the end of the cutting process (Figure 22).

28. An integrated doner cooking and cutting instrument according to claims 1 to 27 wherein the process of the initiation of the cutting, the downward movement on the fixed bar (2) during the cutting process at the position (A), the upward movement after the cutting is completed and the turning by 90° to standstill (B) position of the cutting group (Figure 21) is controlled from the Central Command and Tuning Table (Figure 23).

29. An integrated doner cooking and cutting instrument according to claims 1 to 28 wherein the movement of the meat box (1) with the cooked part of its meat at the open front side (8) cut, by 180° around its axis, then taking its position in front of the next cooker station (16) to let the front side (8) of the uncooked meat block (8A) within itself to be cooked, is being controlled automatically or by instruction from the central command and tuning table.

30. An integrated doner cooking and cutting instrument according to the preceding claims wherein the cooking and cutting processes are continued until the relative meat box (1) (Figure 3, 15) is completely empty as a result of the cooking and cutting of the raw meat block (8A).

31. An integrated doner cooking and cutting instrument according to preceding claims characterised by continuous operation of the integrated instrument by the removal of the completely empty meat box (1) at the lower (17) and upper (18) frames of the rotating group (Figure 12) after the last slice is taken at the cutting station without cooker (15) (Figures 3, 15), and putting in a new meat box (1) full of meat block (8A) to be cooked, and moving the rotating motor (24) and the gears (25) (26) one step ahead from the central command and tuning table so that the new meat box (1) is brought to the opposite of the cooker (16) number 1.

32. An integrated doner cooking and cutting instrument according to preceding claims wherein an integrated instrument whose units only operate in an integrated and connected way is provided, and, within this framework, the rotation of the meat boxes (1) around a fixed cooker group (Figure 11) around the fixed bar (11) at a certain speed and intermittence, positioning thereof opposite the cutting station

without a cooker and getting into cutting position by turning 180° (Figures 13, 14-B) (Figure 22), positioning of the cutting group for the cutting process and its horizontal and vertical movements for this process, and cooking duration and temperatures of the cookers (16) are controlled and tuned from a Central Command and Tuning Table (Figure 23) automatically or manually.

33. An integrated doner cooking and cutting instrument according to preceding claims characterised by adjustment of the cooking degree and amount of the cooked doner meat to be obtained according to the number of cookers and cooking temperatures and the rotating speed of the rotating group (Figure 12).

34. A method for obtaining cooked doner meat characterised by a progressive cooking process wherein each meat box (1) including a meat block (8A) to be cooked prepared beforehand, stands opposite of each cooker (16) for a certain duration or passes by at a certain speed by rotating around a fixed cooking group (Figure 11) comprising 4, 5 or 7 cookers (16) located in a circular shape at a pentagonal, hexagonal or octagonal arrangement, according to desire or need.

35. The method according to claim 34 for obtaining cooked doner meat characterised by preparing the meat block (8A) to be cooked inside the meat boxes (1) beforehand and cooking the meat inside the meat boxes (1).

36. The method according to claim 34 and 35 for obtaining cooked doner meat characterised by preparing the meat blocks (8A) inside the meat boxes (1), and depending on shape and form of the box to obtain the desired standard shape and form of the meat block.

37. The method according to claims 34 to 36 for obtaining cooked doner meat characterised by the automatic cooking and cutting

of the doner ready to serve meat without human intervention at the desired speed, amount and degree of cooking.

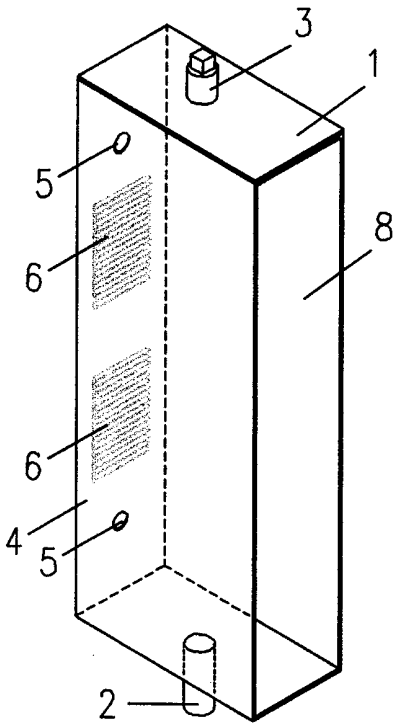

FIGURE-1

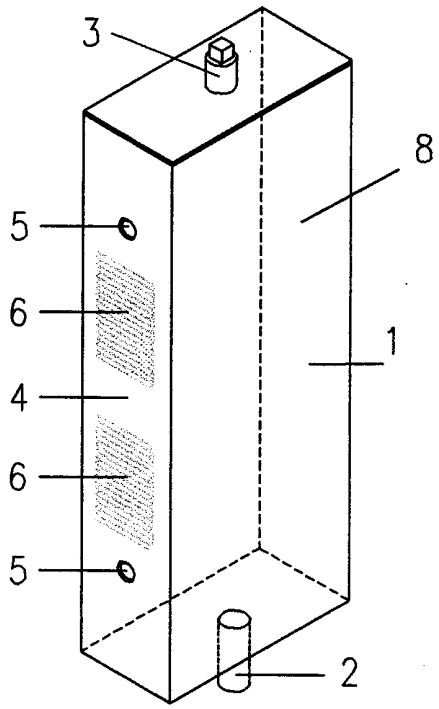

FIGURE-2

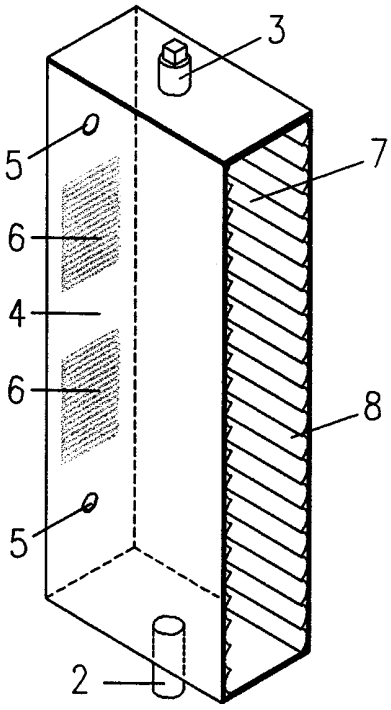

FIGURE-3

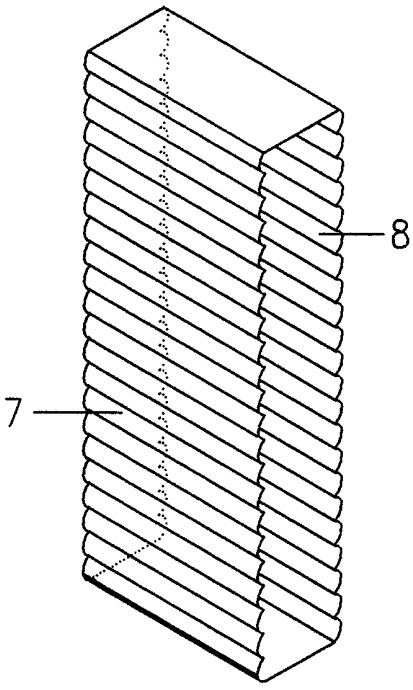

FIGURE-4

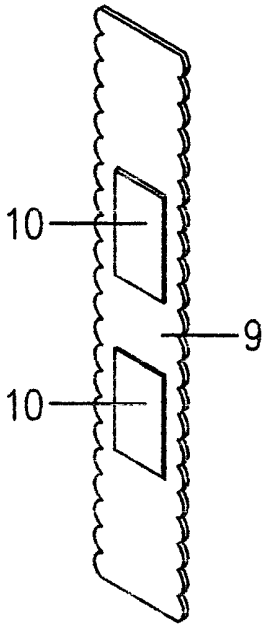

FIGURE-5

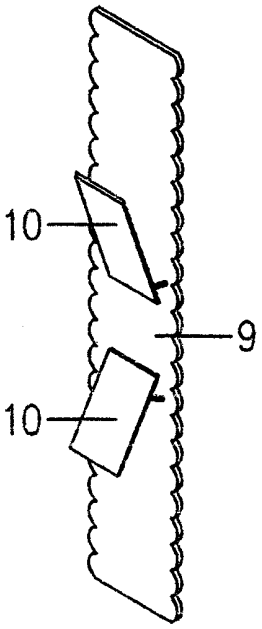

FIGURE-6

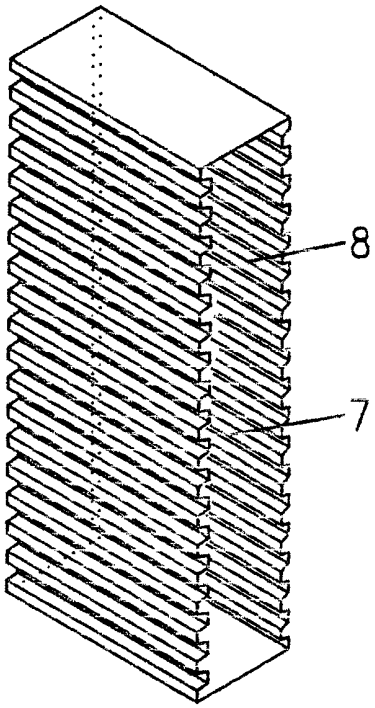

FIGURE-7

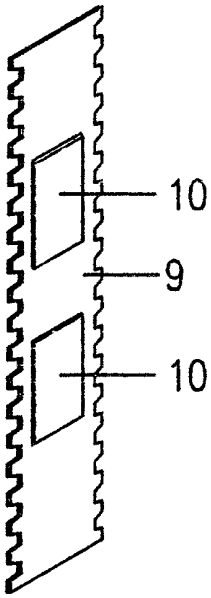

FIGURE-8

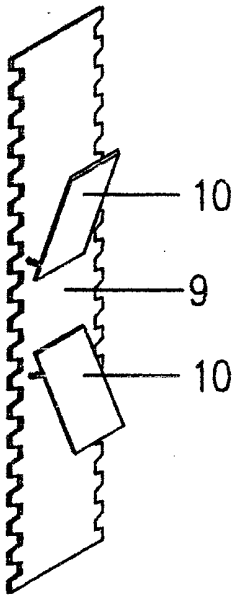

FIGURE-9

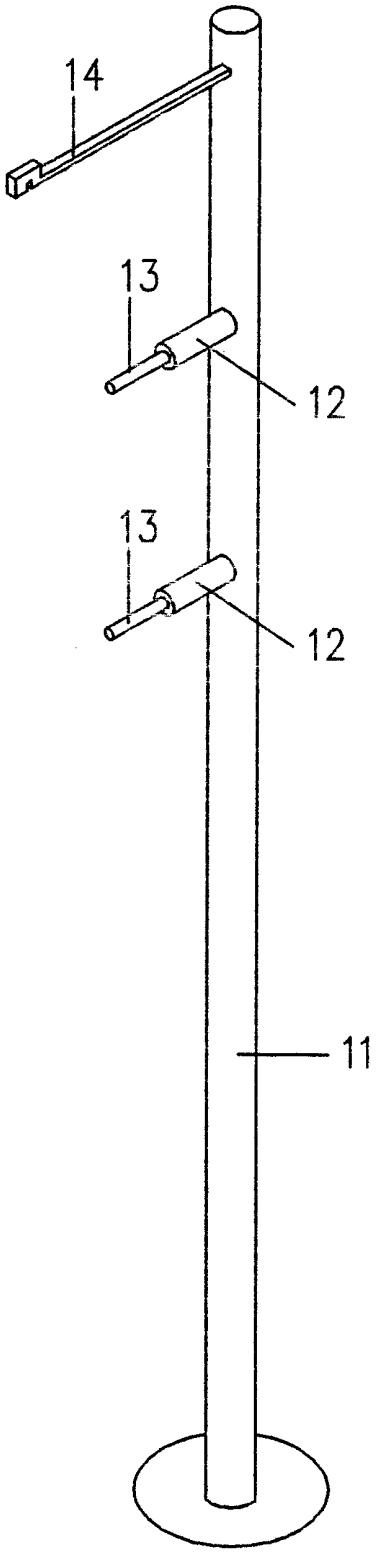

FIGURE–10

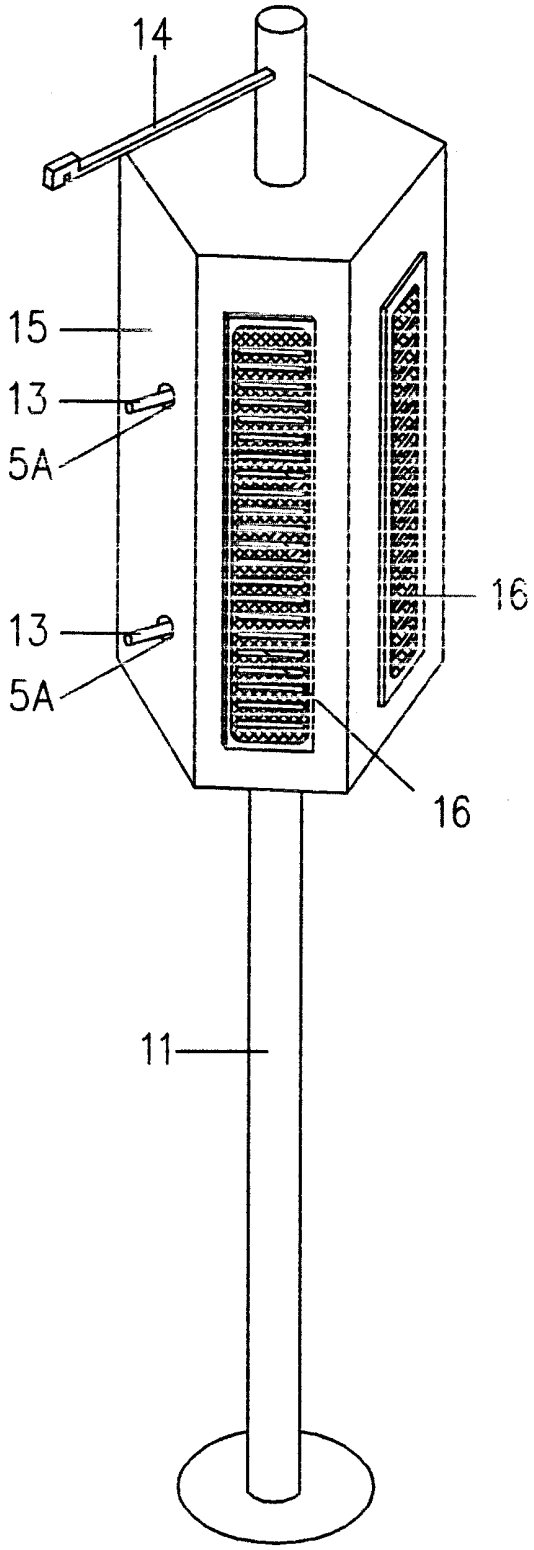

FIGURE–11

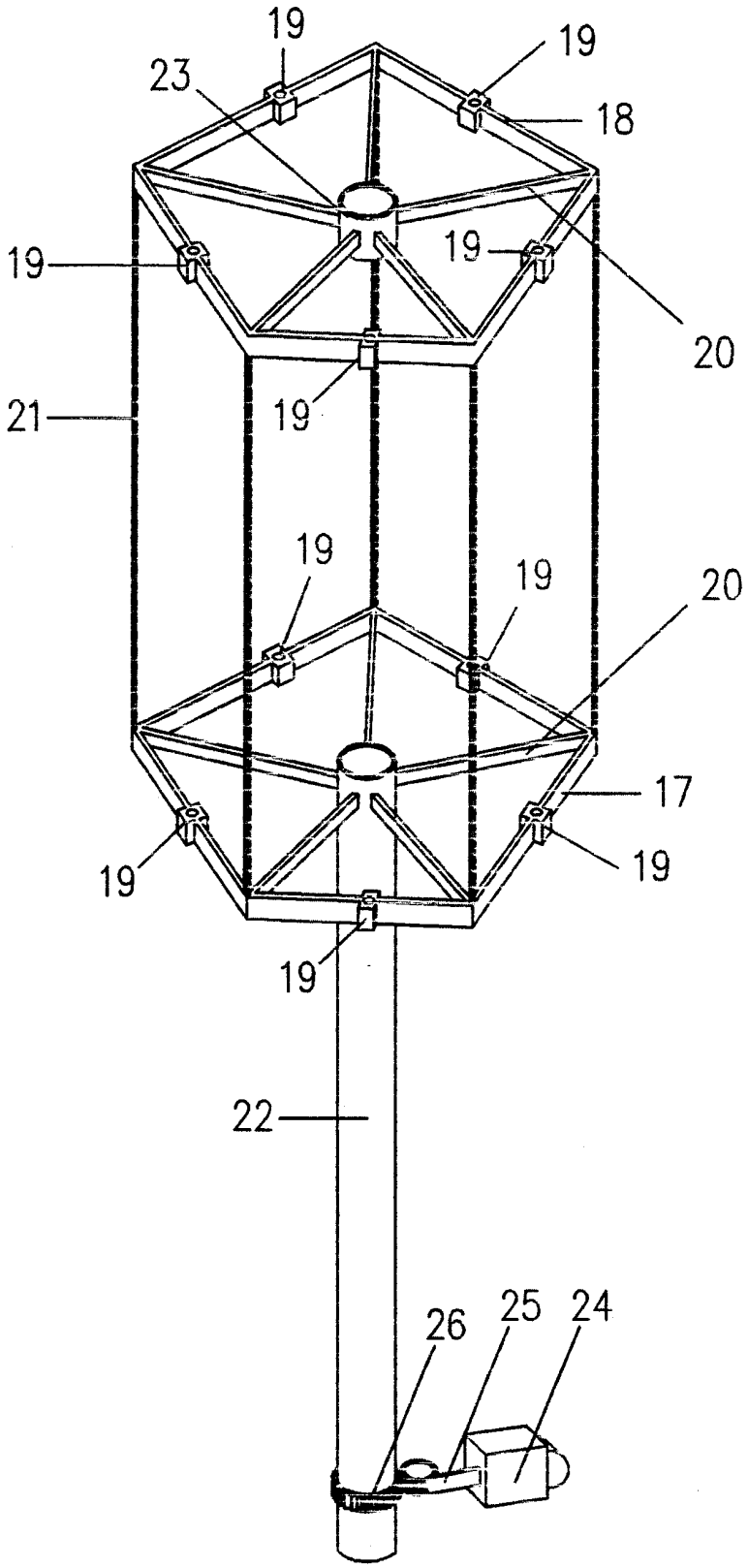

FIGURE–12

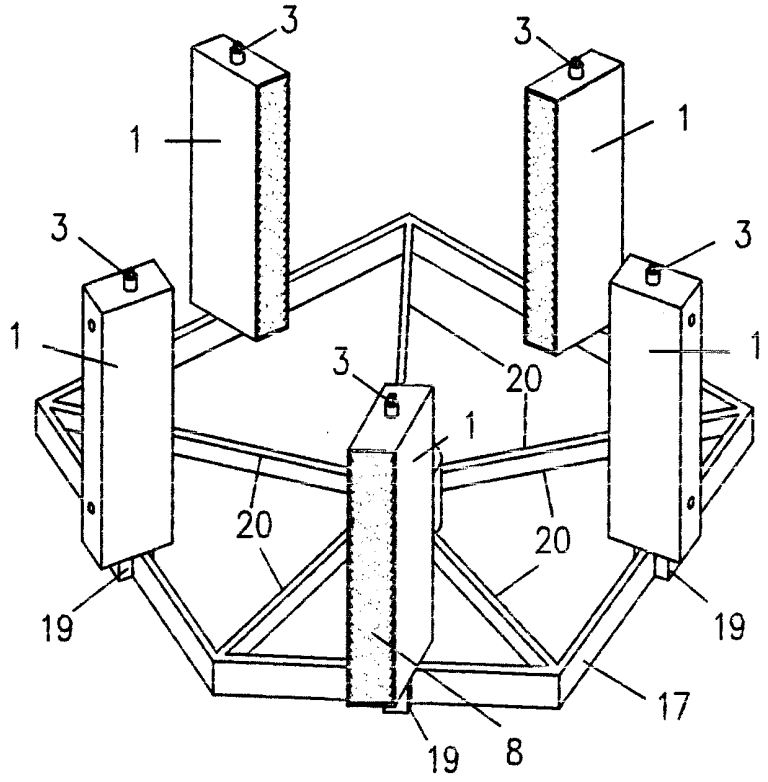

FIGURE–13

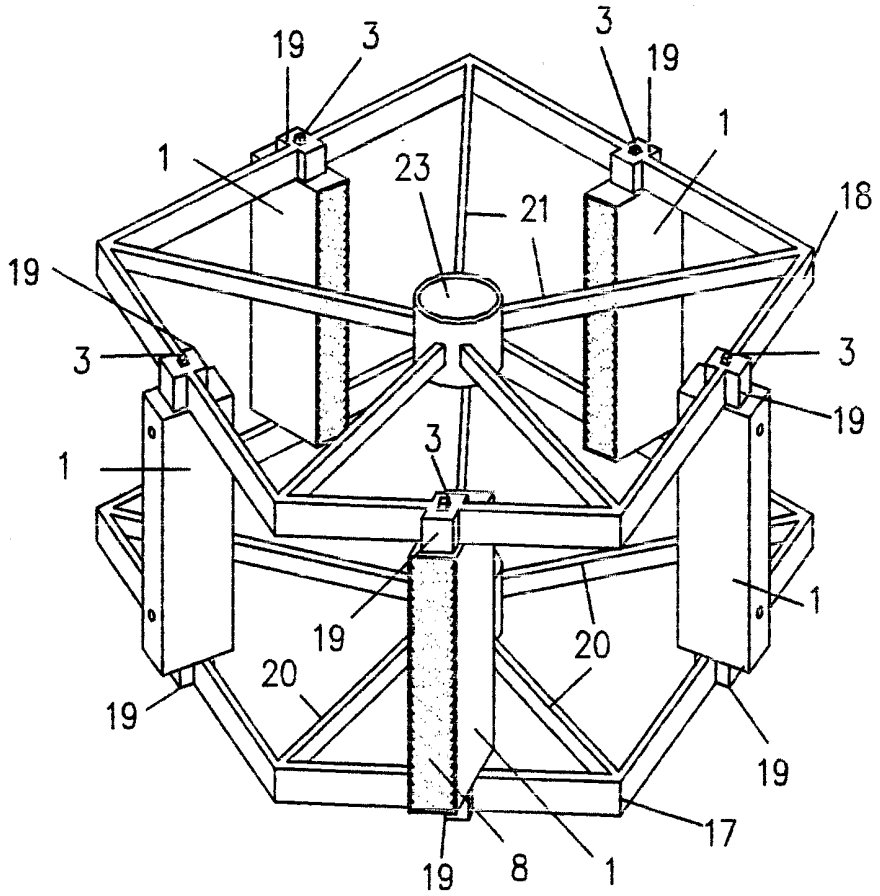

FIGURE–14

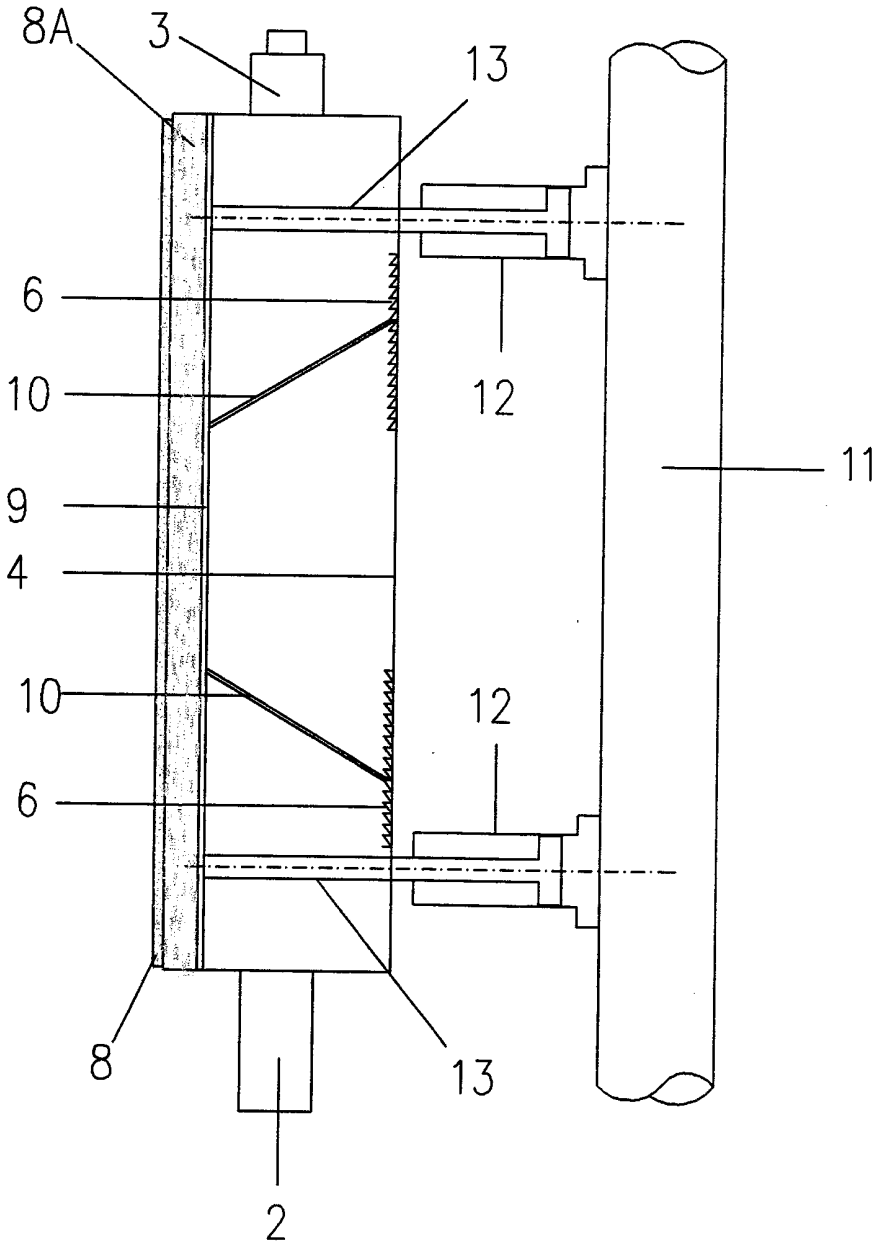

FIGURE–15

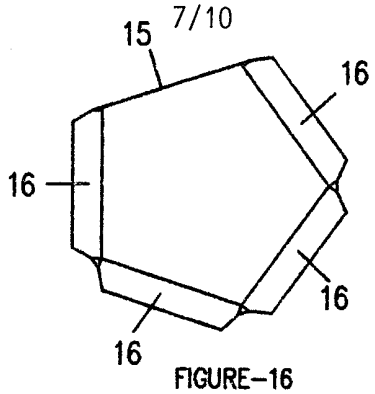

FIGURE–16

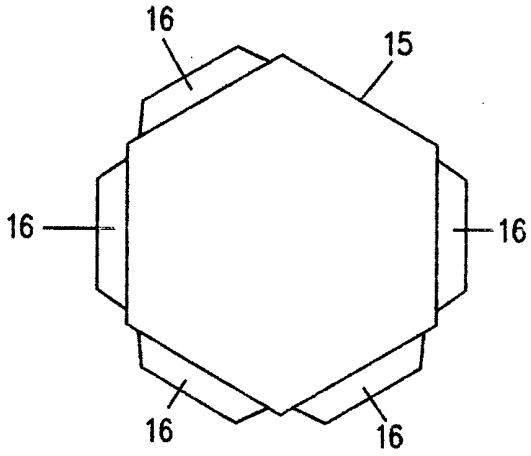

FIGURE–17

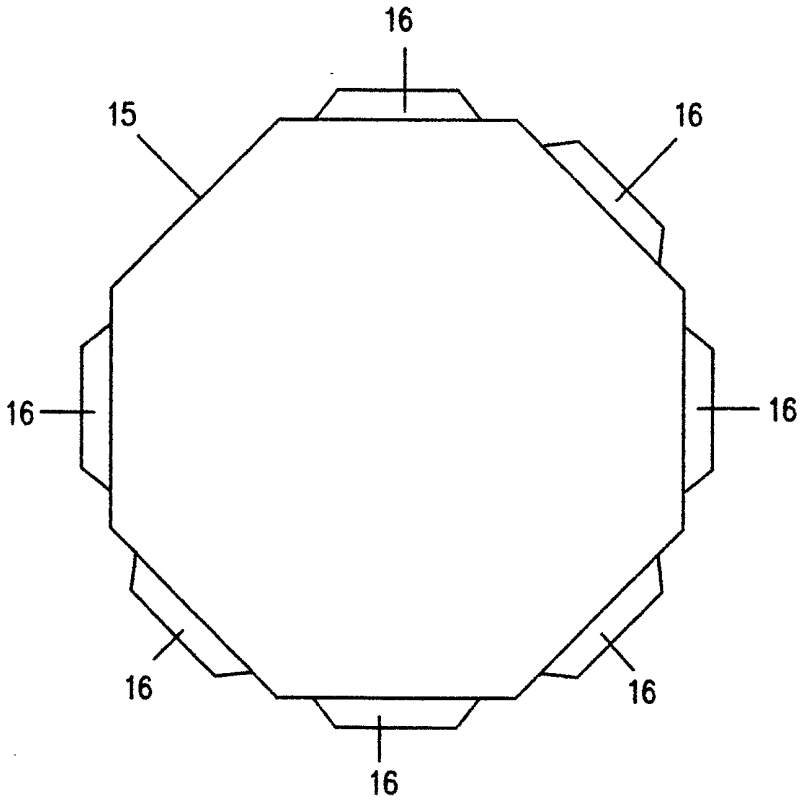

FIGURE–18

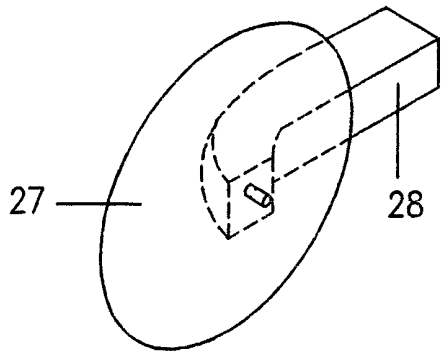

FIGURE–19

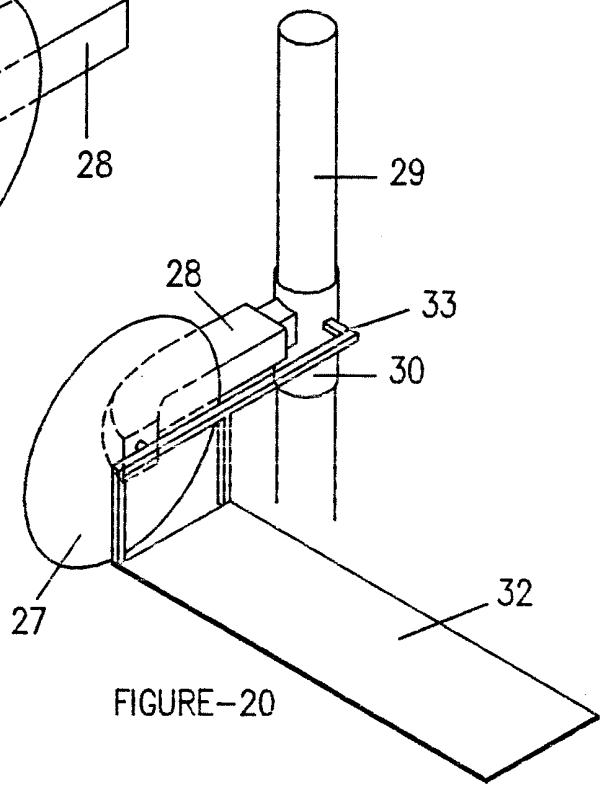

FIGURE–20

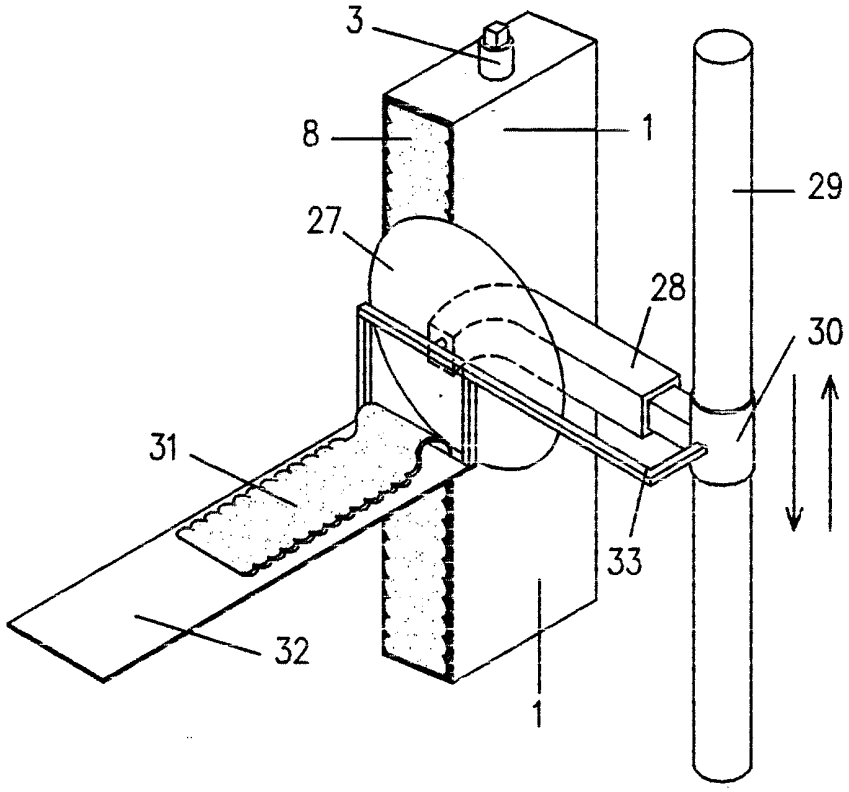

FIGURE–21

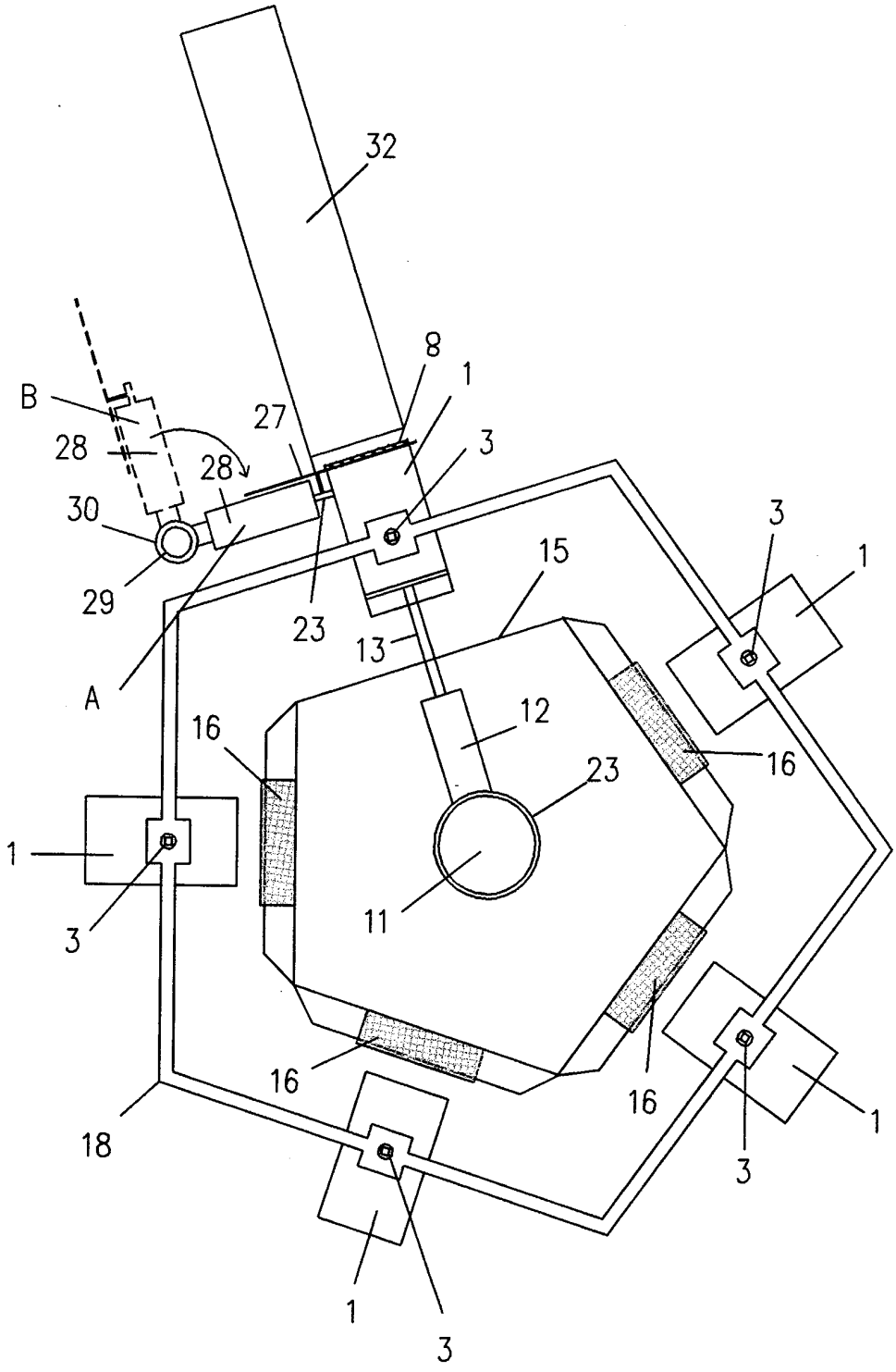

FIGURE-22

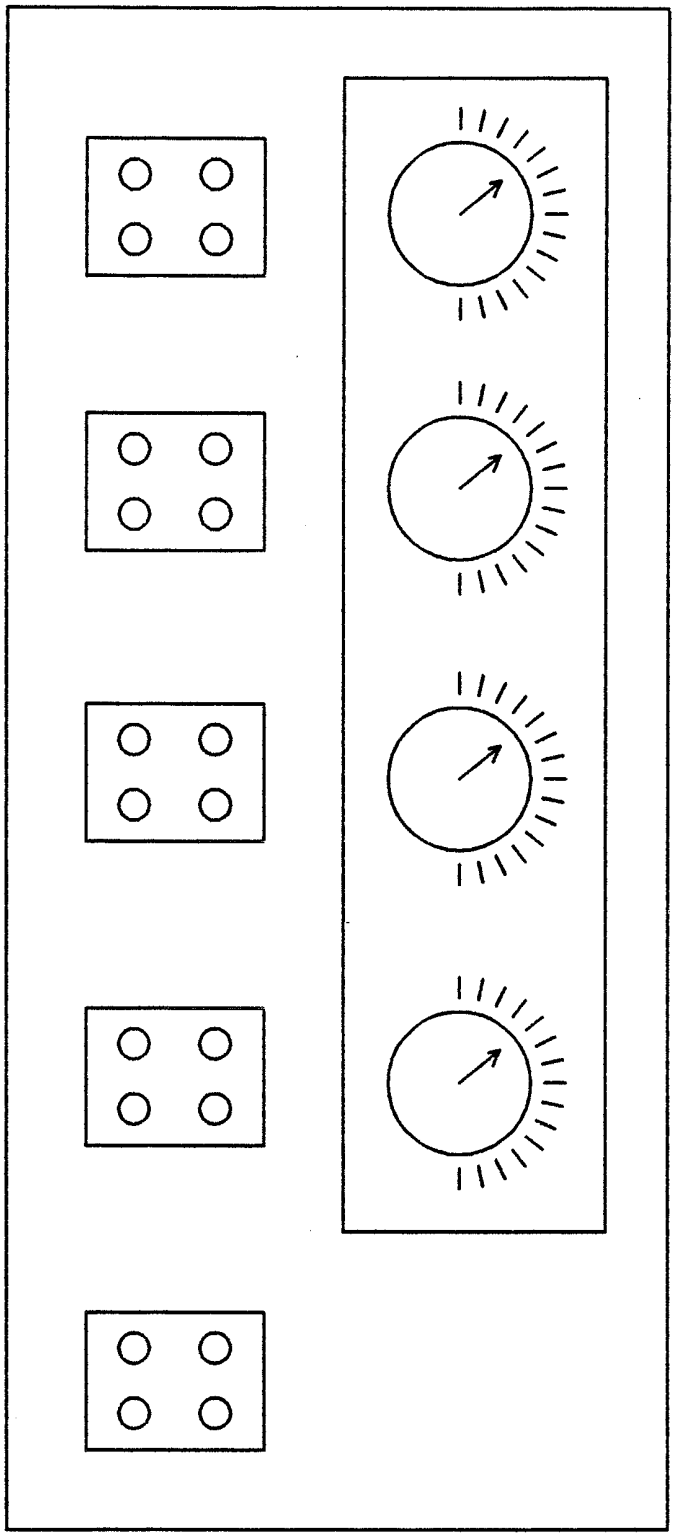

FIGURE–23

INTERNATIONAL SEARCH REPORT

Inter nal application No.
PCT/TR 98/00007

A. CLASSIFICATION OF SUBJECT MATTER

IPC[6]: A 47 J 37/04

According to International Patent Classification (IPC) or to both national classification and IPC

B. FIELDS SEARCHED

Minimum documentation searched (classification system followed by classification symbols)

IPC[6]: A 47 J 37/04

Documentation searched other than minimum documentation to the extent that such documents are included in the fields searched

Electronic data base consulted during the international search (name of data base and, where practicable, search terms used)

C. DOCUMENTS CONSIDERED TO BE RELEVANT

Category*	Citation of document, with indication, where appropriate, of the relevant passages	Relevant to claim No.
A	DE 195 13 636 C1 (TASYUMRUK) 28 March 1996 (28.03.96), abstract.	1
A	DE 44 25 742 C1 (KRAUSE) 18 May 1995 (18.05.95), claim 1; fig..	1
A	GB 2 271 274 A (MUSTAFA KAYA TÜREDI) 13 April 1994 (13.04.94), abstract (cited in the application).	1
A	GB 2 249 716 A (YAHAYA ABDULLAHI NDANUSA) 20 May 1992 (20.05.92), abstract; fig..	1
A	GB 2 218 327 A (MICHAEL ZANNETOS) 15 November 1989 (15.11.89), abstract (cited in the application).	1
A	EP 0 153 148 A1 (OZORAN) 28 August 1985 (28.08.85), abstract (cited in the application).	1

☐ Further documents are listed in the continuation of Box C. ☒ See patent family annex.

* Special categories of cited documents:

"A" document defining the general state of the art which is not considered to be of particular relevance

"E" earlier application or patent but published on or after the international filing date

"L" document which may throw doubts on priority claim(s) or which is cited to establish the publication date of another citation or other special reason (as specified)

"O" document referring to an oral disclosure, use, exhibition or other means

"P" document published prior to the international filing date but later than the priority date claimed

"T" later document published after the international filing date or priority date and not in conflict with the application but cited to understand the principle or theory underlying the invention

"X" document of particular relevance; the claimed invention cannot be considered novel or cannot be considered to involve an inventive step when the document is taken alone

"Y" document of particular relevance; the claimed invention cannot be considered to involve an inventive step when the document is combined with one or more other such documents, such combination being obvious to a person skilled in the art

"&" document member of the same patent family

Date of the actual completion of the international search	Date of mailing of the international search report
18 September 1998 (18.09.98)	07 October 1998 (07.10.98)

Name and mailing address of the ISA/	Authorized officer
Austrian Patent Office Kohlmarkt 8-10; A-1014 Vienna Facsimile No. 1/53424/535	Reif Telephone No. 1/53424/323

Form PCT/ISA/210 (second sheet) (July 1998)

INTERNATIONAL SEARCH REPORT

Informa. .n on patent family members

Inte onal application No.
PCT/TR 98/00007

Im Recherchenbericht angeführtes Patentdokument Patent document cited in search report Document de brevet cité dans le rapport de recherche	Datum der Veröffentlichung Publication date Date de publication	Mitglied(er) der Patentfamilie Patent family member(s) Membre(s) de la famille de brevets	Datum der Veröffentlichung Publication date Date de publication
DE C1 19513636	28-03-96	EP A1 736254 IL A0 117089 PL A1 312806	09-10-96 18-06-96 14-10-96
DE C1 4425742	18-05-95	keine - none - rien	
GB A 2271274		DE A1 4333937 GB A0 9221124 GB A0 9320423 GB A1 2271274 GB B2 2271274	14-04-94 18-11-92 24-11-93 13-04-94 03-07-96
GB A 2249716		GB A0 9024239 GB A0 9123682 GB A1 2249716 GB B2 2249716	19-12-90 02-01-92 20-05-92 25-01-95
GB A 2218327		GB A0 8810993 GB A1 2218327 GB B2 2218327	15-06-88 15-11-89 10-06-92
EP A1 153148	28-08-85	GB A0 8404352	21-03-84