I. SUTHERLAND.

CINEMATOGRAPH MACHINE.

APPLICATION FILED MAY 14, 1920.

1,426,614.

Patented Aug. 22, 1922.

2 SHEETS—SHEET 1.

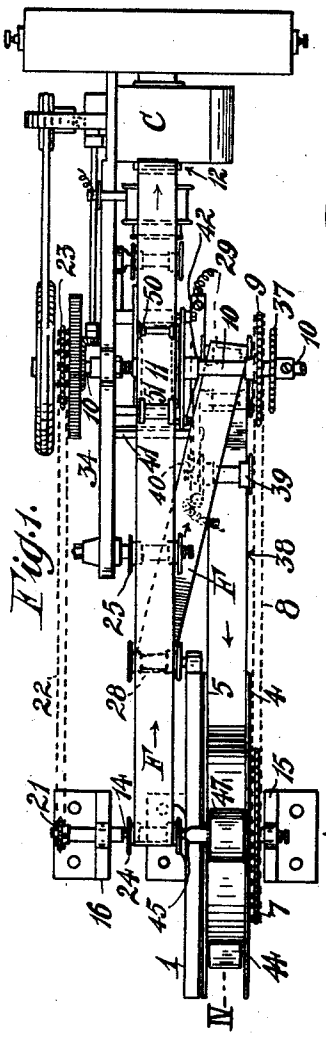

Fig. 1.

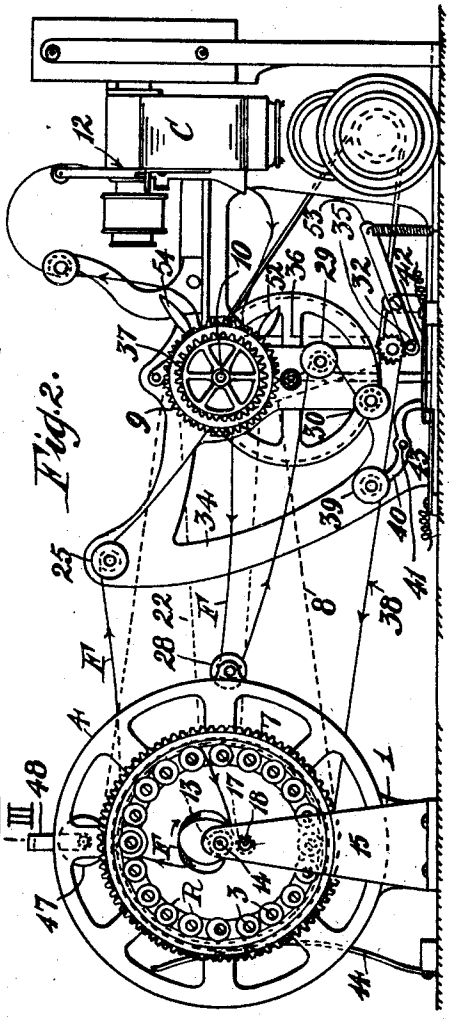

Fig. 2.

Inventor:
Isaac Sutherland
by B. Singer
Attorney

I. SUTHERLAND.

CINEMATOGRAPH MACHINE.

APPLICATION FILED MAY 14, 1920.

1,426,614.

Patented Aug. 22, 1922.

2 SHEETS--SHEET 2.

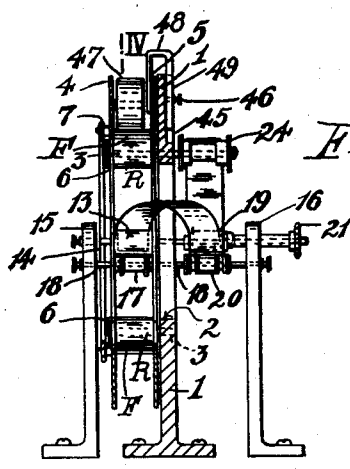


Fig. 3.

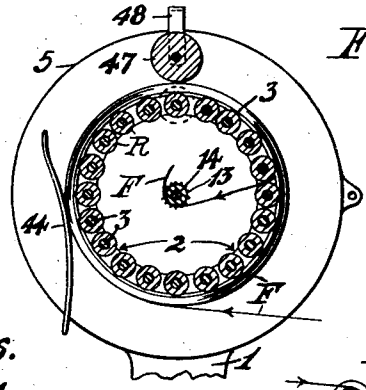


Fig. 4.

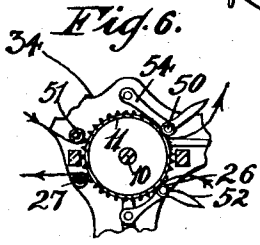


Fig. 6.

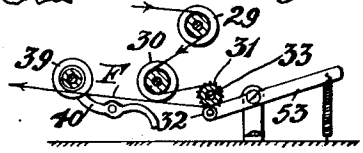


Fig. 5.

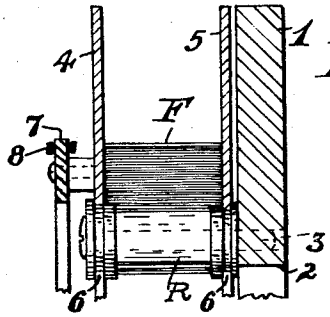


Fig. 7.

Inventor:
Isaac Sutherland
by B. Singer
Attorney

# UNITED STATES PATENT OFFICE.

ISAAC SUTHERLAND, OF MELBOURNE, VICTORIA, AUSTRALIA.

## CINEMATOGRAPH MACHINE.

1,426,614. Specification of Letters Patent. Patented Aug. 22, 1922.

Application filed May 14, 1920. Serial No. 381,429.

(GRANTED UNDER THE PROVISIONS OF THE ACT OF MARCH 3, 1921, 41 STAT. L., 1313.)

*To all whom it may concern:*

Be it known that ISAAC SUTHERLAND, a subject of the King of Great Britain, and resident of "Normanhurst" Collins Place, Melbourne, in the State of Victoria, Commonwealth of Australia, press artist, has invented certain new and useful Improvements Relating to Cinematograph Machines, of which the following is a specification (an application for the same invention having been filed in the Australian Commonwealth on May 3, 1919).

The present invention refers to the cinematographic projection of pictures and has been devised to provide a novel arrangement of the feed of the positive film whereby a series of pictures may be repeated indefinitely without the necessity for stopping the apparatus and rewinding and restoring the film to its original position as is the case at present.

The object of the invention is achieved by an arrangement in which the ends of the coiled film are connected for continuous progression of the film through the usual gate of the machine. This can be carried out in a practical manner by coiling portion of the film on an axially apertured reel, passing the outer and inner ends over suitable guiding devices and through the gate and connecting the ends together, means being provided for causing continuous travel of the endless film so formed.

According to the preferred arrangement the inner winding of the film coil is drawn out from the axial aperture of the reel and fed through the gate and thence returned to rewind on the outer coil of the reel. It will be evident however, that by reversing this arrangement the outer winding of the coil may lead to the gate in which case the film enters the centre of the reel to be rewound thereon.

The accompanying drawings illustrate a practical form of the invention—

Figs. 1 and 2 are respectively a plan and side elevation of a cinematograph machine.

Fig. 3 is a transverse vertical section on line III of Fig. 2.

Fig. 4 a section on lines IV of Figs. 1 and 3.

Figs. 5 and 6 detail views of portions of the gearing.

Fig. 7 an enlarged detail of portion of the reel.

In these figures 1 designates a stand formed with a central circular opening 2 about the edge of which project laterally short spindles 3 upon which are loosely mounted rollers R which are preferably mounted in close contiguity so as to form a peripheral support for the film coil. Around the ring of rollers are two thin circular flanges or plates 4, 5 set the width of the film apart and formed centrally with a circular opening the inner edges of which frictionally engage respectively annular grooves 6 formed near each end of each roller which latter thus supports the plates. Plate 5 is loosely rotatable on the rollers but plate 4 is fixed to a ring shaped sprocket 7 driven by a chain 8 passing around a sprocket 9 on an extension of the shaft 10 that drives the usual sprocket 11 which feeds the film F to the gate 12.

The ring of rollers R together with the circular flange plates 4, 5 practically constitutes a reel for the film coil and rotation of the sprocket 7 causes the flanges by friction to rotate the rollers and thus assists the winding of film coil on the reel. The inner coil passes between two of the rollers as illustrated and thence around a film sprocket 13 centrally arranged within the reel upon a transverse shaft 14 mounted in standards 15, 16 a guide roller 17 mounted on a spindle 18 being used in conjunction with said sprocket 13.

The inner coil proceeds with a helical twist through the central opening of the stand 1 as illustrated and backwardly between a sprocket 19 and roller 20 mounted respectively on the shafts 14 and 18 said shaft 14 having a sprocket 21 at one end driven by a chain 22 and sprocket 23 on the usual shaft 10 of the cinematograph machine.

The film after passing between sprocket 19 and roller 20 travels upwardly over a flanged roller 24 then forwardly over a similar roller 25, over the usual sprocket 11 and thence to the gate 12 when it returns preferably over suitable guide rollers to coil on the outer periphery of the reel. During this latter return part of its travel the film is preferably positively fed and suitably guid-

ed and as illustrated the film after leaving the gate is fed over roller 26, 27 in contact with the teeth on the underside of the sprocket 11 which is made for this purpose of greater diameter than is usual. The film then passes back over a tapered flanged roller 28 then forwardly and obliquely to a similar but oppositely tapered roller 29, thence around a flanged roller 30 and between a sprocket 31 and a roller 32 and finally back to coil on the exterior periphery of the coil.

The sprocket 31 is mounted on a spindle 33 projecting from the frame 34 and to the end of said spindle is fixed a sprocket 35 driven by chain 36 from a sprocket 37 of shaft 10. This latter shaft is coupled to an electric motor (not illustrated) for continuous rotation and means are preferably provided for opening the circuit of such motor, should a break occur in the film.

According to one practical means the film is so arranged that the portion 38 between the sprocket 31 and the reel is always taut and said portion is adapted to support a flanged roller 39 mounted at one end of a lever or contact maker 40 mounted on a spindle 41 with its other end bearing down upon a contact spring 42 adapted to contact with an arm 43. Said spring and arm are arranged in the circuit of the motor and thus while the portion 38 of the film is taut the roller 39 is held up and consequently the lower end of lever 40 is depressed on the contact spring to complete the circuit but instantly slackness of the portion 38 of the film occurs, the roller 39 drops and breaks contact of the spring thus stopping the motor and minimizing damage to the film.

In order to prevent slackness of the film coil on the reel the outer coil of the film is pressed inwardly by weight or spring means or the like. As illustrated a spring 44 is adapted to bear against the exterior coil or a weighted roller 47 is supported on the exterior coil said roller being mounted on an arm 48 the shank portion 48 of which is bevelled on its side edges and adapted to slide freely in a dovetail groove 45 formed vertically in the stand 1 said shank being secured if desired by a clamp screw 46.

The film is kept in contact with the sprocket 11 by means of two rollers 50, 51 as usual and rollers 26, 32 and 50 are respectively mounted on the ends of spring controlled pivoted arms 52, 53, 54 to facilitate adjustment of the film to the sprockets 11 and 31 and rollers 17 and 20 may if desired be similarly mounted.

It will be evident by the foregoing description that by continuously rotating shaft 10 of the cinematograph machine C film F unwinds from the inner coil of the reel and passes between two rollers R, being drawn by sprocket 13 then passes helically out to one side of the reel where it is positively fed forward by sprocket 19 to the main sprocket 11 of the cinematograph machine and through the gate. The film continues over suitable rollers that bring it in line with the reel and a final sprocket 31 feeds it back to be rewound on the periphery of the coil on the reel.

Having now particularly described and ascertained the nature of my said invention, and in what manner the same is to be performed, I declare that what I claim is:—

1. In a motion picture machine, using a film as picture carrier, the combination of a plurality of rollers in circular arrangement on which the coiled film is supported, a ring in frictional contact with all of said rollers and adapted to turn the same, and means for rotating the ring.

2. In a motion picture machine, using a film as picture carrier, the combination of a plurality of rollers in circular arrangement on which the coiled film is supported, a ring frictionally supported by all of said rollers, and adapted to rotate all of them through frictional contact and means for positively driving said ring.

3. In a motion picture machine, using a film as picture carrier, the combination of a plurality of rollers on which the coiled film is supported and having their axes uniformly spaced on a circle, and a positively driven device contacting all of said rollers and adapted to rotate said rollers about their axes.

4. In a motion picture machine, using a film as picture carrier, the combination of a plurality of rollers having their axes fixedly located on the circumference of a circle on which they are evenly spaced, the coiled film being carried by said rollers, and positively driven means supported by said rollers exclusively for frictionally actuating the individual rollers.

5. In a motion picture machine using a film as picture carrier, the combination of the plurality of rollers having their axes fixedly located on the circumference of a circle, the coiled film being carried by said rollers, each of the rollers having a circular groove, a positively driven ring engaged in all of said grooves adapted to frictionally rotate all of said rollers.

6. In a motion picture machine using a film as picture carrier, a film reel comprising a plurality of rollers arranged in a circle, adapted to form the body of the reel, and a pair of reel flanges frictionally supported on and held against lateral displacement by said rollers.

7. In a motion picture machine, a film reel comprising a plurality of circularly spaced rollers, each having circular grooves near its ends, and a pair of annular flanges frictionally seated in said grooves.

8. In a motion picture machine, a film reel comprising a plurality of circularly spaced rollers, each having circular grooves near its ends, and a pair of annular flanges frictionally seated in said grooves, one of said flanges being associated with a sprocket and chain on the surface directed away from said rollers.

9. In a motion picture machine, a vertical standard having a plurality of pins rigidly mounted thereon and projecting therefrom, said pins being circularly arranged on said standard, anti-friction rollers loosely carried on each of said pins, a pair of flanges in frictional contact with each of said rollers and surrounding the entire set of rollers, a sprocket chain mounted on one of said flanges and means for driving said sprocket chain the other flange being in loose frictional contact with the rollers.

10. In a motion picture machine, the combination of a standard, a plurality of rollers in circular arrangement movably supported by said standard, frictional driving means in engagement with all of said rollers and surrounding the same, a friction roller centrally supported with respect to said set of first named rollers, means for frictionally driving said set of first named rollers, and a guiding roller in a plane parallel to the plane of the said first named rollers.

Dated this 12th day of March, 1920.

ISAAC SUTHERLAND.