(12) UK Patent Application (19) GB (11) 2 274 009 (13) A

(43) Date of A Publication 06.07.1994

(21) Application No 9227029.7

(22) Date of Filing 29.12.1992

(51) INT CL[5]
G07F 7/00

(52) UK CL (Edition M)
G4V VAL

(56) Documents Cited
GB 2254469 A GB 2092796 A GB 2042234 A

(58) Field of Search
UK CL (Edition L) G4V VAA VAC VAK VAL
INT CL[5] G07F 7/00 7/02 17/32 17/34
ONLINE DATABASES : WPI

(71) Applicant(s)
Ampy Automation - Digilog Limited

(Incorporated in the United Kingdom)

Frognall, Deeping St James, PETERBOROUGH, PE6 8RS, United Kingdom

(72) Inventor(s)
Kenneth Payne
Andrew John Robinson

(74) Agent and/or Address for Service
Keith W Nash & Co
Pearl Assurance House, 90-92 Regent Street, CAMBRIDGE, CB2 1DP, United Kingdom

(54) Card-operated machines

(57) A machine such as a vending machine or a gaming machine has a card reader (12) and a transceiver (28) adapted to exchange information with a portable unit (26) also having a transceiver, whereby the response of the machine to an inserted card can be altered, for example to alter the quantity of goods or gaming time provided. Information relating to machine operation may be transmitted from transceiver (28) to unit (26) and coded signals may be used.

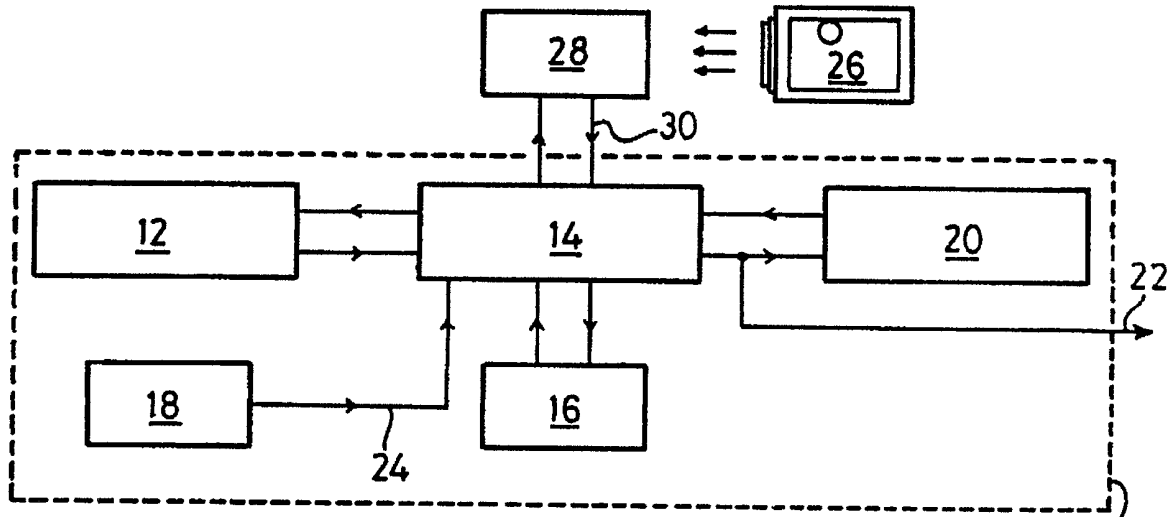

Fig. 1

At least one drawing originally filed was informal and the print reproduced here is taken from a later filed formal copy.

The claims were filed later than the filing date within the period prescribed by Rule 25(1) of the Patents Rules 1990.

This print takes account of replacement documents submitted after the date of filing to enable the application to comply with the formal requirements of the Patents Rules 1990.

GB 2 274 009 A

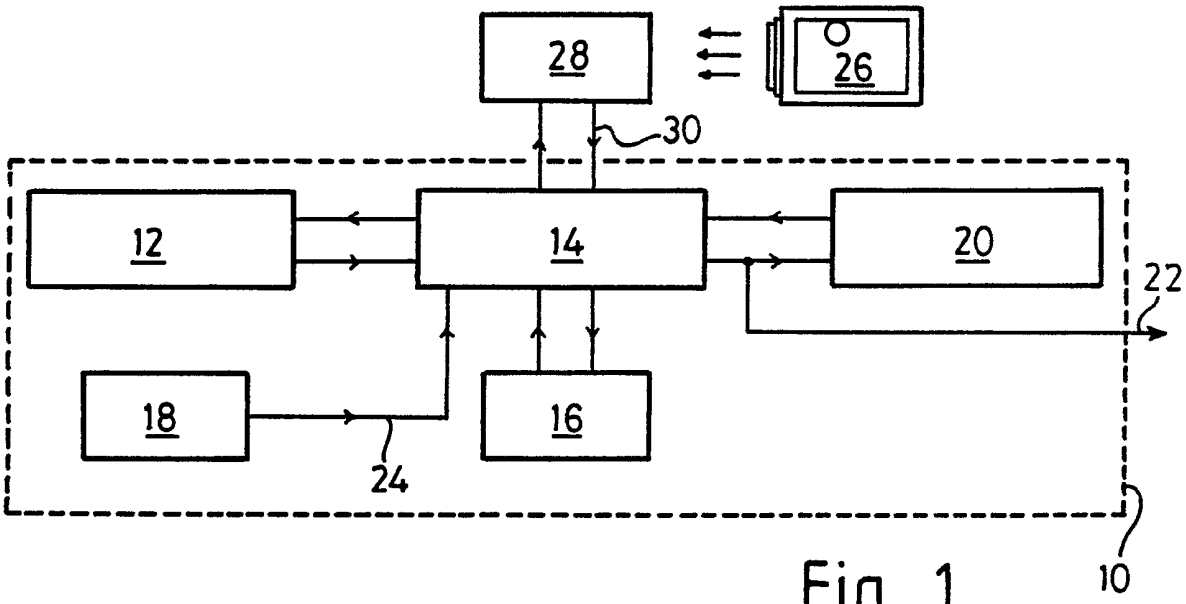

Fig. 1

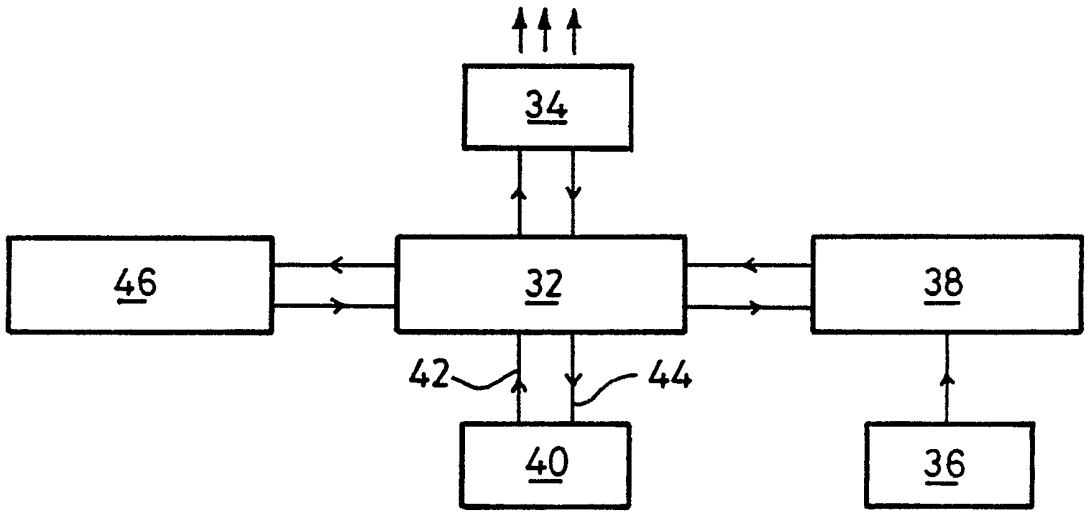

Fig. 2

Title: Improvements in and relating to machines having card readers

Field of invention

This invention concerns machine readable cards and card readers, particularly when used in commodity vending equipment, gaming machines and the like, and devices and methods for programming the operation and response of such devices to the insertion of machine readable cards.

Background to the invention

It has been known for some time that machine readable cards such as magnetically encoded cards can be employed in commodity vending or gaming machines to allow the dispensing of a commodity, or credits to the gaming machine. The amount of credit on such cards can be raised up to the maximum amount of credit encoded on the card to enable commodity to be purchased or games to be played.

It is an object of the present invention to facilitate the programming of card readers and associated machines to determine what can be purchased by the use of the card in such machines.

According to the present invention in a machine adapted to provide a response to the insertion of a machine readable card into a programmable card reader assocated therewith, receiver means is provided responsive to signals transmitted by portable transmitting devices, for

programming the reader or associated apparatus, so as to alter the response of the machine to the subsequent insertion of a card.

The transmitter and receiver means may be linked for example by radio, infra-red, visible light, magnetic, or electro-accoustic such as audible or ultra-sonic radiation.

Each receiver may include a transmitter and each transmitter a receiver, so that bi-directional communication between the portable unit and the machine is possible, enabling signals to be transmitted from the portable unit to the machine and vice versa, as required.

According therefore to another aspect of the present invention in a machine as aforesaid wherein the portable device and the machine each include combined transmitter and receiver (transceiver) means, the card reader in the machine may include memory means associated with the machine transceiver into which signals obtained by the reader and relating to the type of card, identity of card or coded information contained thereon or the like, is stored for subsequent retrieval by the portable transceiver means.

Likewise memory means may be associated with the portable transceiver into which signals can be stored, obtained either from an entry device such as a keyboard associated with the portable device, or from a transmission received from the machine transceiver.

By employing suitable encoding, different wavelengths, modulation techniques or directional receiving and

transmitting devices, or any combination thereof, so a single portable transceiver device may be employed to communicate with more than one machine transceiver. The different machines may be addressed in turn or in groups or all simultaneously, depending on requirement, transmission medium employed and the like.

The portable device may be hand-held.

Encoding of transmitted signals may be amplitude or frequency or pulse or phase modulation of a suitable carrier and digital encoding is preferred.

A method of altering the response of a machine having a card reader associated therewith upon the insertion of a card, comprises the steps of establishing the communication link between a transceiver in the machine and a transceiver in the portable device, selecting signals to be transmitted to the machine transceiver and transmitting same and thereby altering the programming of a programmable device associated with the machine, to thereby alter the function, or functions, which will be performed by the machine, upon the insertion of a card into the card reader associated therewith.

Typically the functions of the machine are controlled by computer programmes stored in a computer memory associated with a micro-processor (of which at least part of the memory may be an integral part), and either different programmes or commands already stored in the memory are selected by signals transmitted to the machine transceiver from the portable unit or programmes or commands in the said machine memory may be replaced by new ones modified by signals transmitted to the machine transceiver from the

portable unit.

A typical machine response which can be adjusted by the invention is the quantity or quality of some commodity which the machine will delivery for one or more units of credit when debited from a pre-programmed card into the reader associated therewith. Thus for example if the machine vends product the signals transmitted can be employed to adjust the amount of the product obtaininable per decoded unit from a suitable pre-programmed machine readable card, when inserted therein.

Where the machine is a gaming machine, the transmitting signals may control the length of the game or number of games which can be obtained per credit unit decoded and debited from a pre-payment machine readable card inserted therein.

Each card may be usable only once and this may be guaranteed by employing the card reader to disfigure or consume the card on use, after all the available credit units have been used up.

Each card may be adapted to be pre-programmed upon suitable payment, and reprogramming apparatus may be provided, associated with a site containing one or more card operated machines, for this purpose.

Where a record of what cards have been used in a machine or how many cards have been used in the machine and how many cards have been used to obtain a given amount of, or number of product, or the identity of cards employed as required, the machine card reader may be programmed to retrieve and store appropriate information from each card

insertion, and make the stored information available upon appropriate interrogation signals being received thereby as from a portable transmitter unit as aforesaid.

The invention also lies in a portable transmitter unit with or without receiver means, for establishing at least one communication with a receiver unit associated with a programmable card read in a machine, and adapted to transmit commands signals to the card reader receiver to alter the programming associated therewith and thereby alter the functioning of the machine.

For security, the signals to be transmitted may be coded and a decoding key, only made available to qualified operators. The key may be a second machine readable card adapted to be inserted into a card reader of the machine, or in a card reader associated with the portable unit, or may be a number or word or combination of letters and numerals, entrusted to and known only to the operator and the portable unit may include keyboard means by which such data can be keyed in by the operator when required, to enable authorised intrusion, reprogramming, data retrieval and the like to be performed.

The invention will now be described by way of example, with reference to the accompanying drawings, in which:

Figure 1 is a block schematic diagram of a system employing an optical link between a portable hand-held device and the machine which is controlled by the insertion of a machine readable card; and

Figure 2 is a block schematic diagram of a hand-held unit as shown in Figure 1.

Detailed description of drawings

In Figure 1 the contents of the dotted outline box 10 are the essential elements of a programmable machine control system which includes a magnetic card reader 12, microprocessor controlled device or micro-controller 14, memory 16, card detector 18 and monitoring device or watchdog 20.

The card reader 12 delivers electrical pulses to the micro-controller 14. The latter decodes the pulses and generates control signals for transmission via a signal path 22 to control circuits (not shown) within the machine and also a monitoring device 20 which for example compares each generated signal with a look-up table and in turn controls the signals released along line 22 and ensures that only correct control signals are supplied to the machine.

The micro-controller 14 also supplies data to a memory 16 or receives from the memory depending on the instructions generated by the micro-processor within the controller 14.

Card detection means 18 as its name suggests simply determines when a card has been inserted into the card reader. Such a device enables the micro-controller to be powered down into a sleep mode to conserve power and a signal from the card detector 18 along line 24 is arranged to change the operating condition of the system so that it is ready to receive and respond to signals from the read head 12.

Further signal paths are shown in Figure 1 on the assumption that the read head is also a writing head and to this end signals from the micro-controller 14 may be supplied to the read/write head for inserting data onto a card for example to indicate the number of credit units left on the card or to cancel information stored on the card or to write information to the card to indicate that the card has been used in a particular machine and cannot be used in that machine again.

Data can be transmitted to the micro-controller from a remote hand-held unit 26 containing an optical transmitting device which is a light emitting diode, laser, modulated light source or the like and a suitable opto-electrical transducer is provided in an optical port 28 for receiving light signals from the remote hand-held unit 26 and decoding same and delivering signals to the micro-controller along the line 30 in response to signals transmitted thereto by the hand-held unit 26.

Where the latter also includes receiver means, the optical port 28 will advantageously include transmitter means so that signals from the micro-controller 14 can be conveyed back to the hand-held unit 26 via the same optical port 28, this time the latter operating as a transmitter and the hand-held unit operating as a receiver.

The establishment of transmission direction may be automatic, may be multiplexed, may be menu-driven or operator controlled.

Alternatively different hand-held units may be employed one for downloading information from the micro-controller and memory 14, 16 and the other adapted to transmit data

to the micro-controller 14 and remainder of the system 10.

In the first case the remote unit includes a transmitter device for triggering via the optical port micro-controller 14 into a read and transmit mode whereafter data stored within the memory 16 and/or additional memory within the micro-controller 14 (not shown) is read out and transmitted via the optical port 28 to the remote hand-held receiver unit 26.

In the other mode of operation, information stored within the hand-held unit 26 can be transmitted to the micro-controller via the optical port 28 and again the hand-held unit 26 includes a suitable transceiver (which may be the same as the first mentioned transceiver) for triggering the micro-controller by the optical port 28 into the appropriate mode. In the second mode of operation, the triggering signal from the remote hand-held unit 26 triggers the micro-controller 14 into a receive mode so that signals subsequently received thereby via the optical port 28 are processed and stored in appropriate memories such as 60 for subsequent use and/or are conveyed via signal paths such as 22 to appropriate elements within the machine or to the watchdog 20.

Figure 2 illustrates the contents of the hand-held unit 26. As with the system of Figure 1, the hand-held unit is micro-processor controlled by a micro-controller 32 and incoming signals from the optical port 28 are received by an optical port 34 associated with the hand-held unit and vice versa. A battery which may be a rechargeable device 36 provides power for the micro-controller via an ON/OFF switch 38 which additionally serves to enable data

transfer when operated. In this way if the battery becomes low or is disconnected, the data transfer enable condition is inhibited so that in a low battery system, corrupting data cannot be transmitted or received.

As before, a memory 40 is provided linked to the micro-controller 32 with data transfer paths 42 and 44 for transferring data to and from the memory 40.

Signals indicating when data transfer has occurred, are generated by data transfer acknowledge circuit 46.

In the event that the hand-held unit is a dedicated receive only device, the optical port 34 only has to decode received data signals. Where the hand-held device is to be a dedicated transmit only device, the optical port 34 is exchanged for a transmitting device which is modulated or otherwise driven by signals from the micro-controller 32. Since it is nevertheless necessary to advise the unit when it is to be interrogated, the optical port 34 additionally includes light sensitive signal detector means for receiving and decoding a precursor to a transmission and end of transmission signal so that the micro-controller 32 and related circuitry can be "woken up" upon receipt of an appropriate precursor and can be powered down into a sleep mode when the end of signal pulse is received.

Since both transmitting and receiving functions are desirable if only to enable a receive only hand-held device to trigger a remote micro-controller into transmit activity via its associated optical port thereby to cause the micro-controller within the machine to power up and interrogate on-board memories and adjoining memories such

as 16 in Figure 1, to assemble data for transmission to the hand-held unit.

Although in the illustrated example optical data transfer is utilised, the optical ports and optical transmitting and receiving devices may be replaced by any suitable signal receiving circuitry.

Both units to advantage utilise an imbedded micro-controller such as a type TMS77C82, to process all signals, including the transmission of digitally encoded information from one device to another.

Typically the optical communication is achieved by means of infra-red photo-diodes and 38KHz AM infra-red receptors serving as the receiver.

Data is preferably transmitted in serial form and modulated at 38KHz by the processor within the micro-controller 32.

The receiver within the optical port 34 converts any received signals to a serial pulse train for subsequent decoding by the micro-controller.

All aspects of the card readers interface with the host machine can be pre-programmed in software and changed at any time to suit individual needs. Thus the variables used in a programme may be stored in the EEPROM 16. It is this information that can be down loaded from the remote hand-held unit to the card reader via the optical port.

The card reader can also send detailed information back to a remote hand-held unit such a shown in Figure 2. The

return information may for example be the number of operations so far, the number of operations when last programmed, the readers identity code and the like. The latter is typically an individual identity code given to each reader or operator, for both security and identification. Thus communication between a remote hand-held unit and a machine mounted unit can be established in a secure manner by forcing entry of a reader identification code before any transmission in reception path has been set up.

As mentioned, two separate remote hand-held units may be used in the system, one to down load programming to the card reader on the machine and one to up lift data from the card reader unit. Both hand-held units may be powered by 9V batteries or the like which are only switched on when the power ON/data transfer push button switch 38 is depressed and typically the micro-controller and remaining circuitry is also switched off by the processor when communication ceases.

The programming information and identity number of the reader to be programmed is generated in a PC using custom software (not shown). The programming information is then down loaded to the remote hand-held unit using for example an optical programming device and the down loaded data is stored in a suitable EPROM such as 40 within the hand-held unit.

The invention thus enables programming of a card reader to be performed simply by pointing the remote hand-held unit towards the reader and depressing the power ON - data transfer push button 38. The remote hand-held unit will first check to ensure that the identity code of the reader

it is communicating with is identical to one that it has been asked to programme. Successful communication is acknowledged by an audio transduced sounding.

A second remote hand-held unit is designed to read only and thereby allow blocks of data which contain information about the card readers current status to be down loaded from the card reader circuits of Figure 1 to the hand-held unit circuits of Figure 2. The hand-held unit is capable of storing information in a significant EPROM in respect of up to 400 individual card readers. The accumulated data can be bulk loaded via a suitable transmission cable into a personal computer (PC) using a programming device for later use in custom applications, software packages such as accountancy packages and the like.

Claims

1. A machine adapted to provide a response to the insertion of a machine readable card into a programmable card reader associated with said machine, wherein receiver means is provided responsive to signals transmitted by a portable transmitting device, for programming the reader or associated apparatus so as to alter the response of the machine to the subsequent insertion of a card.

2. A machine according to claim 1, wherein the receiver means is adapted to be linked to the transmitting device by radio, infra-red, visible light, magnetic, electro-acoustic, audible or ultra-sonic radiation.

3. A machine according to claim 1 or claim 2, in combination with the portable transmitting device.

4. A machine according to claim 3, wherein the receiver means includes a transmitter and the transmitting device includes a receiver, so that bi-directional communication between the portable device and the machine is possible, enabling signals to be transmitted from the portable device to the machine and vice versa, as required.

5. The combination according to claim 4, wherein both the machine and the portable device include a transceiver, and wherein the card reader in the machine includes memory means associated with the machine transceiver into which signals obtained by the reader and relating to the type of card, identity of card or coded information contained

thereon or the like, is stored for subsequent retrieval by the portable transceiver device.

6. The combination according to claim 5, wherein memory means is associated with the portable transceiver device into which signals can be stored, obtained either from an entry device such as a keyboard associated with the portable device, and/or from a transmission received from the machine transceiver.

7. The combination according to any of claims 4 to 6, wherein the portable device is a hand-held unit.

8. The combination according to any of claims 4 to 7, wherein, by employing suitable encoding, different wavelengths, modulation techniques or directional receiving and transmitting devices, or any combination thereof, the single portable transceiver device is adapted to communicate with more than one machine transceiver.

9. The combination according to claim 8, employing encoding of transmitted signals by amplitude or frequency or pulse or phase modulation of a carrier.

10. The combination according to claim 8 or claim 9, employing digital encoding.

11. A method of altering the response of a machine having a card reader associated therewith to the insertion of a card, comprising the steps of establishing the communication link between a transceiver in the machine and a transceiver in a portable device, selecting signals to be transmitted to the machine transceiver and transmitting same and thereby altering the programming of

a programmable device associated with the machine, to thereby alter the function or functions which will be performed by the machine upon the insertion of a card into the card reader associated therewith.

12. A method according to claim 11, wherein the functions of the machine are controlled by a computer program stored in a computer memory associated with a microprocessor (of which at least part of the memory may be an integral part), and either different programs or commands already stored in the memory are selected by signals transmitted to the machine transceiver from the portable unit or programs or commands in the said machine memory are replaced by new programs or commands modified by signals transmitted to the machine transceiver from the portable unit.

13. A method according to claim 12, wherein the machine response altered by transmission of signals from the portable unit is the quantity or quality of a commodity which the machine will deliver for one or more units of credit when debited from a pre-programmed card inserted into the reader associated with the machine.

14. A method according to claim 13, wherein the machine is a gaming machine, and wherein the transmitted signals control the length of the game or number of games which can be obtained per credit unit decoded and debited from a pre-payment machine readable card inserted into the card reader.

15. A method according to claim 14, wherein the machine readable card is usable only once and this is ensured by employing the card reader to disfigure or consume the card

after all the available credit units have been used.

16. A method according to claim 14, wherein the machine readable card is adapted to be pre-programmed upon suitable payment, and reprogramming apparatus may be provided for this purpose, associated with a site containing one or more card operated machines.

17. A method according to any of claims 13 to 16, wherein, in order to obtain a record of what cards have been used in a machine or how many cards have been used in the machine or how many cards have been used to obtain a given amount of, or number of product or the identity of cards employed, the machine card reader is programmed to retrieve and store appropriate information from each card insertion, and make the stored information available upon appropriate interrogation signals being received thereby from the portable transceiver unit.

18. A portable transmitter unit with or without receiver means, for establishing at least one communication with a receiver unit associated with a programmable card reader in a machine, and adapted to transmit command signals to the receiver unit to alter the programming associated therewith and thereby alter the functioning of the machine.

19. A unit according to claim 18, wherein the signals to be transmitted are coded and a decoding key is only made available to qualified operators.

20. A unit according to claim 19, wherein the key is a second machine readable card adapted to be inserted into a card reader of the machine, or in a card reader associated

with the portable unit, or may be a number or word or combination of letters and numerals, entrusted to and known only to the operator and the portable unit may include keyboard means by which such data can be keyed in by the operator when required, to enable authorised intrusion, reprogramming and data retrieval to be performed.

21. A machine having a card reader and signal receiver substantially as hereinbefore described with reference to Figure 1 of the accompanying drawings.

22. A portable unit having a transmitter for communicating with a machine having a card reader and receiver, substantially as hereinbefore described with reference to the accompanying drawings.

23. The combination of the machine of claim 21 and the unit of claim 22.

24. A method of adjusting the response of a machine having a card reader substantially as hereinbefore described.

Patents Act 1977
Examiner's report to the Comptroller under Section 17
(The Search report)

-18-

Application number
GB 9227029.7

Relevant Technical Fields

(i) UK Cl (Ed.L) G4V (VAA, VAC, VAK, VAL)

(ii) Int Cl (Ed.5) G07F 7/00, 7/02, 17/32, 17/34

Search Examiner
G NICHOLLS

Date of completion of Search
20 OCTOBER 1993

Databases (see below)
(i) UK Patent Office collections of GB, EP, WO and US patent specifications.

(ii) ONLINE DATABASE: WPI

Documents considered relevant following a search in respect of Claims :-
1-24

Categories of documents

X: Document indicating lack of novelty or of inventive step.

Y: Document indicating lack of inventive step if combined with one or more other documents of the same category.

A: Document indicating technological background and/or state of the art.

P: Document published on or after the declared priority date but before the filing date of the present application.

E: Patent document published on or after, but with priority date earlier than, the filing date of the present application.

&: Member of the same patent family; corresponding document.

Category	Identity of document and relevant passages		Relevant to claim(s)
X	GB 2254469 A	(BARCREST) See especially page 2 lines 16-17 and page 3 lines 15-20	1-3, 11, 12, 18
X	GB 2092796 A	(INTERPLAY ELECTRONICS) See especially page 1 lines 12-18 and 35-37	1-3, 11, 18
X	GB 2042234 A	(BARCREST) Whole document see especially page 2 lines 43-56	1-4, 8, 11, 12, 18

Databases: The UK Patent Office database comprises classified collections of GB, EP, WO and US patent specifications as outlined periodically in the Official Journal (Patents). The on-line databases considered for search are also listed periodically in the Official Journal (Patents).